RCRA HAZARDOUS WASTE FACILITY OPERATING PERMIT PART B APPLICATION

Clean Harbors Recycling Services of Ohio, LLC

Hebron, OH

EPA ID No. OHD 980 587 364

CleanHarbors®

December 2014

Volume I

RECEIVED
DEC 19 2014
OHIO EPA - DMWM

RCRA HAZARDOUS WASTE FACILITY OPERATING PERMIT PART B APPLICATION

Clean Harbors Recycling Services of Ohio, LLC

Hebron, OH

EPA ID No. OHD 980 587 364

CleanHarbors®

December 2014

Volume I

Clean Harbors Recycling Services Of Ohio, LLC
581 Milliken Drive SE
Hebron, OH 43025

740-929-3532
www.cleanharbors.com

December 19, 2014

Hand Delivered

Mr. Craig Butler, Director
Ohio EPA - DHWM
Regulatory and Information Services Section
Lazarus Government Center
50 West Town Street, Suite 700
Columbus, OH 43216-1049
(614) 644-3020

RE: Clean Harbors Recycling Services of Ohio, LLC
OHD 980 587 364
RCRA Part B Permit Renewal

Dear Mr. Butler:

Clean Harbors Recycling Services of Ohio, LLC (hereinafter, Clean Harbors) hereby submits its RCRA Part B Permit renewal application.

On October 22, 2014, Melissa Storch, Grant Hewett and Bradley Mitchell of OEPA met with Monte Londot and me at the above referenced facility. During that meeting a discussion was held concerning a possible means to submit this application with revisions to Section 5 (Groundwater Monitoring) and Section 10 (Corrective Action) included that would require an accompanying RCRA Class 3 Permit modification in order to possibly resolve the facility's current permit appeal dated July 18, 2005 (Case No. ERAC 455763). On December 16, 2014, a conference call was held with Chris Bulinski, Grant Hewett and others with the OEPA and Geoff Jones, Monte Londot and me of Clean Harbors in order to revisit this matter since many aspects of both the facility's groundwater monitoring program and corrective action activities are dynamic and ongoing with several matters including a risk assessment and corrective action system evaluation presently undergoing review by Clean Harbors. At that time it was decided that pursuant to Ohio Administrative Code the facility could not make substantial changes within its RCRA Part B Permit renewal application, and that it was acceptable for the facility to proceed with the application being updated only for minor revisions. Further discussion was held relative to details of the groundwater monitoring program and corrective action parts of the RCRA permit/application being submitted as a permit modification at a later date once the aforementioned reviews and additional pending work was completed.

Clean Harbors respectfully expresses its intent to continue the current permit appeal until all outstanding matters have been addressed and an amicable resolution is in order. Clean Harbors is actively discussing with the Attorney General's Office a way to coordinate the current permit appeal with the application for and issuance of a permit renewal. Clean Harbors intends to reserve all of the company's rights under the current permit appeal and this application presently has no bearing on the issues relevant to that matter.

Should you have any questions or comments regarding this matter, please contact me at (423) 413-1218, or at desha.david@cleanharbors.com.

Sincerely,

David A. DeSha
Sr. Compliance Manager

Enclosures

cc: Melissa Storch, OEPA
Grant Hewett, OEPA
William Connors, Clean Harbors Environmental Services
Jim Childress, Clean Harbors Environmental Services
Timmery Fitzpatrick, Clean Harbors Environmental Services

US EPA Region 5
Jae Lee
RCRA Branch (LR-8J)
77 West Jackson Boulevard
Chicago, Illinois 60604-3590
(312) 886-3781

DIVISION OF MATERIALS AND WASTE MANAGEMENT

APPLICATION FOR NEW OR RENEWAL OF HAZARDOUS WASTE FACILITY INSTALLATION AND OPERATION PERMIT

Facility Name: CLEAN HARBORS RECYCLING SERVICES OF OHIO, LLC

Facility Location: 581 MILLIKEN DRIVE
(Street)

HEBRON OH 43025
(City) (State) (Zip Code)

Facility Mailing Address: SAME
(If different from above) (Street)

(City) (State) (Zip Code)

U. S. EPA ID No.: OHD 980 587 364

Facility Contact: MONTE LONDOT / GENERAL MANAGER
(Name) (Title)

Facility Telephone: (740) 929-3532 EXT. 104

I hereby apply for new or renewal of the Ohio Hazardous Waste Facility Installation and Operation Permit issued for the facility indicated above.

CERTIFICATION STATEMENT

I certify under penalty of law that this document and attachments were prepared under my direction or supervision in accordance with a system designed to assure that qualified personnel properly gather and evaluate the information submitted. Based on my inquiry of the person or persons who manage the system, or those persons directly responsible for gathering the information, the information submitted is, to the best of my knowledge and belief, true, accurate, and complete. I am aware that there are significant penalties for submitting false information, including the possibility of fine and imprisonment for the known violations.

James C Childress
(Name - Type or Print)

Revenue I.D. (Office Use)

V.P. Compliance
(Title - Type or Print)

$1,500.00
Amount Enclosed

(Signature & Date)

Check Receipt - Date & No. (Office Use)

Ohio EPA Invoice/Receipt

Date Printed: October 27, 2014

Revenue ID: 1003557

Please include this Revenue ID with all correspondence.

Place ID: 25575

Information: Clean Harbors Recycling Services of Ohio LLC
581 Milliken Dr SE
Hebron, OH 43025-9687

Due Date: ~~June 17, 2015~~ 12/19/2014

Amount Due: $1,500.00

Effective Date: October 27, 2014

Revenue Description: DHWM- Application fee for a Hazardous Waste Permit
Program Name: RCRA C - Hazardous Waste
Reason: Hazardous Waste Renewal Fee

For some Revenues, Interest and/or Penalties may be charged for late payment.

Next Interest Date (if applicable):

Next Penalty Date (if applicable):

Remittance Advice | **Detach Here - Please Return This Portion With Your Payment**

Place ID: 25575

Information: Clean Harbors Recycling Services of Ohio LLC
581 Milliken Dr SE
Hebron, OH 43025-9687

Due Date: Jun 17, 2015

Amount Due: $1,500.00

Secondary Type/Id: ALPLN / Safety-Kleen System
Revenue Type: APRH1

Amount Enclosed: $ 1,500.00

Please write this number on your check. Revenue ID: 1003557
Make check or money order payable to "Treasurer, State of Ohio"

Remit to: **Ohio Environmental Protection Agency - OFA**
Department L-2711
Columbus, OH 43260-2711

For Ohio EPA use only

Check ID: _____
Check Date: _____
Check Number: _____
Check Amount: $_____

		150000	APRH1	1003557

TABLE OF CONTENTS

Section

1 Part A Application

2 Facility Description
- 2.1 General Description
- 2.2 Topographical Information
  - 2.2.1 General Requirements
- 2.3 Location Information
  - 2.3.1 Seismic Standard
  - 2.3.2 Floodplain Standard
- 2.4 Traffic Information

3 Waste Characteristics
- 3.1 Waste Identification
- 3.2 Waste Analysis Plan
- Appendix 3-1 Waste Analysis Plan

4 Process Information
- 4.1 General Description of Storage Areas on On-Site Operations
  - 4.1.1 Storage Areas and Truck Stations
  - 4.1.2 Reclamation and Storage Activities
- 4.2 General Description of Storage Areas on On-Site Operations
  - 4.2.1 Description of Containers
  - 4.2.2 Container Management Practices
  - 4.2.3 Secondary Containment System Design and Operation
  - 4.2.4 Control of Run-On
  - 4.2.5 Removal of Liquids from Containment System
  - 4.2.6 Test for Free Liquids
- 4.3 Tank Systems
  - 4.3.1 Existing Tank System
  - 4.3.2 Dimensions and Capacity of Each Tank
  - 4.3.3 Description of Feed Systems, Safety Cutoff, By Pass Systems and Pressure Controls
  - 4.3.4 Diagram of Piping, Instrumentation, and Process Flow for Each Tank
  - 4.3.5 Tank Age Determination
  - 4.3.6 Requirements of Secondary Containment and Leak Detection
- 4.4 Other Units
- 4.5 Process Vent Emission Control Device

5 Groundwater Monitoring
- 5.1 Introduction

TABLE OF CONTENTS

Section

5.2 Summary of Groundwater Monitoring Data
5.3 Aquifer Identification
5.4 Delineation of the Waste Management Area
5.5 Description of Plume of Contamination
5.6 Proposed Groundwater Monitoring Program
5.7 Compliance Monitoring
Appendix 5-1 Groundwater Monitoring Plan
Appendix 5-2 Groundwater Monitoring Well Logs

6 Procedures to Prevent Hazards
6.1 Security
6.1.1 Security Procedures and Equipment
6.1.2 Waiver
6.2 General Facility Inspections
6.2.1 General Inspection Requirement
6.2.2 Container Inspection
6.2.3 Tank Inspection and Tank Condition Assessment
6.3 Documentation of Preparedness & Prevention Requirements
6.3.1 Communications
6.3.2 Water for Fire Control
6.3.3 Aisle Space Requirements
6.3.4 Arrangements/Agreements with Local Authorities
6.4 Preventive Procedures, Structures, and Equipment
6.4.1 Loading and Unloading Operations
6.4.2 Runoff
6.4.3 Water Supplies
6.4.4 Equipment and Power Failure
6.4.5 Personal Protection Equipment
6.5 Precautions to Prevent Ignition or Reaction of Ignitable or Reactive Waste
6.5.1 General Precautions for Handling Ignitable or Reactive Waste and Mixing of Incompatible Waste
6.5.2 Documenting Compliance with General Requirements for Ignitable, Reactive or Incompatible Waste
6.5.3 Management of Ignitable or Reactive Wastes in Containers
6.5.4 Management of Incompatible Wastes in Containers
6.5.5 Management of Ignitable or Reactive Wastes in Tank Systems
6.5.6 Management of Incompatible Wastes in Tank Systems

7 Contingency Plan
7.1 General Information
7.2 Emergency Coordinators
7.3 Implementation of the Contingency Plan

TABLE OF CONTENTS

Section

7.4 Emergency Response Procedures
7.4.1 Notification
7.4.2 Identification of Hazardous Materials
7.4.3 Assessment
7.4.4 Emergency Control Procedures
7.4.4.1 Emergency Spill Control
7.4.4.2 Fire Control Procedures
7.4.4.3 Floods
7.4.4.4 Explosions
7.5 Coordination Agreements
7.6 Evacuation Plan
7.7 Required Reports
7.8 Amendments to the Contingency Plan

8 Training Program
8.1 Outline of the Training Program
8.1.1 Introductory Training Program
8.1.2 Continuing Training Program
8.2 Health and Safety/Environmental Manager
8.3 Relevance of Training to Job Position
8.4 Training of Emergency Response
8.5 Implementation of Training Program

9 Closure Plan
9.1 Facility Description
9.2 Maximum Inventory
9.3 Closure Administration
9.4 Closure Procedures
9.5 Tank Closure Procedures
9.5.1 Tank Decontamination
9.5.2 Tank Entry Procedures
9.6 Container Storage Area Closure Procedures
9.7 UST Post-Closure Plan

10 Corrective Action for Solid Waste Management Units
10.1 Corrective Action After 1985 Fire
10.2 Corrective Action Associated with Removal of UST
10.3 Corrective Measures Plan
10.4 Additional Site Investigation

11 Other State and Federal Laws

TABLE OF CONTENTS

Section

12 Certification

13 Subpart AA – Organic Air Emissions from Process Vents

14 Subpart BB – Air Emission Standards for Equipment Leaks

15 Subpart CC – Air Emission Standards for Tanks, Surface Impoundments and Containers

SECTION 1

RCRA Subtitle C Site Identification Form
&
Hazardous Waste Permit Information Form

A topographic map of the Clean Harbors Recycling Services of Ohio, LLC in Hebron, OH is included as Exhibit 11. The latitude and longitude of the facility is as follows:

Latitude: 39° 59' 04" N
Longitude: 82° 28' 33" W

The following facility drawings have been included:

Drawing description	Exhibit No.
Existing Site	2
Former Site Plan	8

The information presented in the Hazardous Waste Permit Information Form (Attachment 1-1), Section 10, Description of Hazardous Wastes, with respect to estimated annual quantity of waste (Column B on pages 6 through 9) has not been segregated by waste stream. Table 1-1 presents the estimated quantity for each hazardous waste stream. This information has been obtained based on the history of the facility and on current and expected market trends.

Clean Harbors estimates that the total quantity of hazardous wastes received at the facility annually will be approximately twenty-five million gallons. The annual estimated quantities which are presented in Table 1-1 for each individual waste stream (i.e., A through C) may be exceeded. Even though the sum of the estimated annual quantities for each individual waste stream exceeds twenty-five million gallons, it is estimated that the quantity of waste that the facility will handle per type is around 162,129 tons as shown on the estimated annual quantity of waste specified on the Hazardous Waste Permit Information Form.

TABLE 1-1

ESTIMATED ANNUAL QUANTITIES OF WASTE BY WASTE STREAM

Waste Streams	Waste Codes	Estimated Annual Quantity of Waste (Gallons)
A. Dry-Cleaning Solvent Waste	Perchloroethylene F002 D001	~10,000,000
B. Other Organic Solvents (oils, grease, carbons, metals from metal parts cleaning and tolling streams)	D001 F003 F004 F005 TCLP codes (e.g., D006, D008)	~10,000,000
C. Others (these waste codes may be found as contaminants in waste streams A through B, or may be taken as separate wastes)	D-, K-, F-, and U-codes	~5,000,000

ATTACHMENT 1-1

RCRA SUBTITLE C SITE IDENTIFICATION FORM
&
HAZARDOUS WASTE PERMIT INFORMATION FORM

MAIL THE COMPLETED FORM TO: Ohio EPA, DMWM, P.O. Box 1049, Columbus, OH 43216-1049	Ohio Environmental Protection Agency **RCRA SUBTITLE C SITE IDENTIFICATION**	For Ohio EPA Use Only

1. Reason for Submittal	**Reason for Submittal:** ☐ To provide initial notification (to obtain an EPA ID Number for hazardous waste, universal waste, or used oil activities). ☒ To provide subsequent notification (to update site identification information). ☐ As a component of a First RCRA Hazardous Waste Part A Permit Application. ☐ As a component of a Revised RCRA Hazardous Waste Part A Permit Application (Amendment #_____) ☐ As a component of the Hazardous Waste Report for the year _____.		
2. Site EPA ID No.	**EPA ID Number:** OHD 980 587 364		
3. Site Name	**Name:** Clean Harbors Recycling Services of Ohio, LLC		
4. Site Location Information	**Street Address:** 581 Milliken Drive, SE		
	City, Town, or Village: Hebron	**County:** Licking	
	State: OH	**Country:** USA	**Zip Code:** 43025
5. Site Land Type	**Site Land Type:** ☒ Private ☐ County ☐ District ☐ Federal ☐ Indian ☐ Municipal ☐ State ☐ Other		
6. North American Industry Class. System (NAICS) Code(s) for the Site	**A.** (Primary) 562920	**B.**	
	C.	**D.**	
7. Site Contact Person:	**First Name:** Monte	**MI:**	**Last Name:** Londot
	Title: General Manager		
	Street or P.O. Box: 581 Milliken Drive, SE		
	City, Town or Village: Hebron		
	State: OH	**Country:** USA	**Zip Code:** 43025
	E-mail: londot.monte@cleanharbors.com		
	Phone & Ext.: (740) 929-3532 ext. 104	**Fax:**	
8. Legal Owner and Operator of the Site	**A. Name of Site's Legal Owner:** Clean Harbors Recycling Services of Ohio, LLC	**Date Became Owner (mm/dd/yyyy):** / / 03/21/2008	
	Owner Type ☒ Private ☐ County ☐ District ☐ Federal ☐ Indian ☐ Municipal ☐ State ☐ Other		
Additional Owners and/or Operators should be listed in the Comment Section or on another copy of this form page.	**Street or P.O. Box:** 581 Milliken Drive, SE		
	City, Town, or Village: Hebron	**Phone:** (740) 929-3532	
	State: OH	**Country:** USA	**Zip Code:** 43025
	B. Name of Site's Operator: Clean Harbors Recycling Services of Ohio, LLC	**Date Became Operator (mm/dd/yyyy):** / / 03/21/2008	
	Operator Type: ☒ Private ☐ County ☐ District ☐ Federal ☐ Indian ☐ Municipal ☐ State ☐ Other		
	Street or P.O. Box: 581 Milliken Drive, SE		
	City, Town, or Village: Hebron	**Phone:** (740) 929-3532	
	State: OH	**Country:** USA	**Zip Code:** 43025

9. Type of Regulated Waste Activity (Mark "X" in the appropriate boxes.)

A. Hazardous Waste Activities

1. **Generator of Hazardous Waste**
(choose only one of the following three categories or leave blank if not applicable)

[X] a. **Large Quantity Generator (LQG):** Greater than 1,000 kg/mo (2,200 lbs.) of non-acute hazardous waste; or

[ ] b. **Small Quantity Generator (SQG)** 100 to 1,000 kg/mo (220-2,200 lbs.) of non-acute hazardous waste; or

[ ] c. **Conditionally Exempt Small Quantity Generator (CESQG):** Less than 100 kg/mo of non-acute hazardous waste

In addition, indicate other generator activities (check all that apply)

[ ] d. Short-Term Generator (generate from a short-term or one-time event and not from on-going processes). If "Yes", provide an explanation in the Comments section.

[X] e. United States Importer of Hazardous Waste

[ ] f. Mixed Waste (hazardous and radioactive) Generator

2. **Hazardous Waste Report Generator Status**
(choose one if a Reason for Submittal is the Hazardous Waste Report)

[X] a. **Large Quantity Generator (LQG):** Greater than 1,000 kg/mo (2,200 lbs.) of non-acute hazardous waste was generated at the site in any one month. or

[ ] b. **Small Quantity Generator (SQG)** In one or more months the site generated greater than 100kg (220 lbs) but in no month did it generate more than 1,000 kg/mo (220-2,200 lbs) of non-acute hazardous waste, or

[ ] c. **Conditionally Exempt Small Quantity Generator (CESQG):** The site generated no more than 100 kg (220 lbs) of non-acute hazardous waste in any one month.

[ ] d. **Non-Generator** The site did not generate any hazardous waste during the calendar year.

For Items 3 through 7, check all that apply:

3. **Transporter of Hazardous Waste**
[ ] a. Transporter
[X] b. Transfer Facility (at your site)

[X] 4. **Treater, Storer or Disposer of Hazardous Waste (at your site)** Note: A hazardous waste permit is required for this activity.

[X] 5. **Recycler of Hazardous Waste (at your site)** Note: A hazardous waste permit may be required for this activity.

[ ] a. 72-hour Recycler

6. **Exempt Boiler and/or Industrial Furnace**

[ ] a. Small Quantity On-site Burner Exemption
[ ] b. Smelting, Melting and Refining Furnace Exemption

[ ] 7. **Underground Injection Control**

[X] 8. **Receives Hazardous Waste from Off-site**

B. Universal Waste Activities

[X] 1. **Large Quantity Handler of Universal Waste (accumulate 5,000 kg or more). Indicate types of universal waste managed at your site. (check all boxes that apply):**

	Managed
a. Batteries	[x]
b. Pesticides	[x]
c. Mercury Containing Equipment	[x]
d. Lamps	[x]

[ ] 2. **Destination Facility for Universal Waste**
Note: A hazardous waste permit may be required for this activity.

C. Used Oil Activities

1. **Used Oil Transporter**
Indicate Type(s) of Activity(ies)
[ ] a. Transporter
[X] b. Transfer Facility (at your site)

2. **Used Oil Processor and/or Re-refiner**
Indicate Type(s) of Activity(ies)
[ ] a. Processor
[ ] b. Re-refiner

[ ] 3. **Off-Specification Used Oil Burner**

4. **Used Oil Fuel Marketer - Indicate Type(s) of Activity(ies)**
[ ] a. Marketer Who Directs Shipment of Off-Specification Used Oil to Off-Specification Used Oil Burner
[ ] b. Marketer Who First Claims the Used Oil Meets the Specifications

D. Eligible Academic Entities with Laboratories – Notification for opting into or withdrawing from managing laboratory hazardous wastes pursuant to OAC rules 3745-52-200 through 3745-52-216

☐ 1. Opting into or currently operating under OAC rules 3745-52-200 through 3745-52-216 for the management of hazardous wastes in laboratories. **Mark all that apply:**

- ☐ a. College or University
- ☐ b. Teaching hospital that is owned by or has a formal written affiliation agreement with a college or university
- ☐ c. Non-profit Institute that is owned by or has a formal written affiliation agreement with a college or university

☐ 2. Withdrawing from OAC rules 3745-52-200 through 3745-53-216 for the management of hazardous waste in laboratories

10. Waste Codes for Federally Regulated Hazardous Wastes. Please list the codes for the federally regulated hazardous waste handled at your site. List them in the order they are presented in the regulations (e.g., D001, D003, F007, U112). Use an additional page if more space is needed.

Enclosed- See	Hazardous Waste	Permit Inform.	Form			

11. Comments

12. Certification. I certify under penalty of law that this document and all attachments were prepared under my direction or supervision in accordance with a system designed to assure that qualified personnel properly gather and evaluate the information submitted. Based on my inquiry of the person or persons who manage the system, or those persons directly responsible for gathering the information, the information submitted is, to the best of my knowledge and belief, true, accurate, and complete. I am aware that there are significant penalties for submitting false information, including the possibility of fine and imprisonment for knowing violations.

Signature of owner, operator, or an authorized representative	Name and Official Title (type or print)	Date Signed (mm-dd-yyyy)
	James Childress/VP Envir. Compl East	12/19/2014

EPA ID Number | O | H | D | 9 | 8 | 0 | 5 | 8 | 7 | 3 | 6 | 4 |

OMB#: 2050-0024; Expires 12/31/2014

United States Environmental Protection Agency

HAZARDOUS WASTE PERMIT INFORMATION FORM

1. Facility Permit Contact	**First Name:** Monte	**MI:**	**Last Name:** Londot
	Contact Title: General Manager		
	Phone: (740) 929-3532	**Ext.:** 104	**Email:** londot.monte@cleanharbors.com
2. Facility Permit Contact Mailing Address	**Street or P.O. Box:** 581 Milliken Drive, SE		
	City, Town, or Village: Hebron		
	State: OH		
	Country: USA	**Zip Code:** 43025	
3. Operator Mailing Address and Telephone Number	**Street or P.O. Box:** 581 Milliken Drive, SE		
	City, Town, or Village: Hebron		
	State: OH	**Phone:** (740) 929-3532	
	Country: USA	**Zip Code:** 43025	
4. Facility Existence Date	**Facility Existence Date (mm/dd/yyyy):** 09/01/1980		

5. Other Environmental Permits

A. Facility Type (Enter code)	B. Permit Number													C. Description
E	0	1	-	4	5	-	0	2	-	0	2	3	5	Title V Air Operating Permit
P	7	4	2	5	6									Emergency water pump general air permit
P	7	4	2	5	7									Emergency fire foam generator general air permit
E	D	S	P	-	O	H	-	1	5	0	1	2		Alcohol Distillers Permit - Department of Treasury
N	2	0	0	9	1	9								POTW Discharge Permit
N	4	G	R	0	0	4	9	4	*	E	G			NPDES General Stormwater Permit

6. Nature of Business: Solvent recycling and fuel blending for offsite energy recovery. Storage of hazardous waste in tanks and containers in support of recycling/recovery/reclamation and waste transfer operations. Other recycling for non-RCRA wastes.

7. Process Codes and Design Capacities – Enter information in the Section on Form Page 3

A. PROCESS CODE – Enter the code from the list of process codes below that best describes each process to be used at the facility. If more lines are needed, attach a separate sheet of paper with the additional information. For "other" processes (i.e., D99, S99, T04 and X99), describe the process (including its design capacity) in the space provided in Item 8.

PROCESS DESIGN CAPACITY – For each code entered in Item 7.A; enter the capacity of the process.

1. AMOUNT – Enter the amount. In a case where design capacity is not applicable (such as in a closure/post-closure or enforcement action) enter the total amount of waste for that process.
2. UNIT OF MEASURE – For each amount entered in Item 7.B(1), enter the code in Item 7.B(2) from the list of unit of measure codes below that describes the unit of measure used. Select only from the units of measure in this list.

C. PROCESS TOTAL NUMBER OF UNITS – Enter the total number of units for each corresponding process code.

Process Code	Process	Appropriate Unit of Measure for Process Design Capacity
	Disposal	
D79	Underground Injection Well Disposal	Gallons; Liters; Gallons Per Day; or Liters Per Day
D80	Landfill	Acre-feet; Hectares-meter; Acres; Cubic Meters; Hectares; Cubic Yards
D81	Land Treatment	Acres or Hectares
D82	Ocean Disposal	Gallons Per Day or Liters Per Day
D83	Surface Impoundment Disposal	Gallons; Liters; Cubic Meters; or Cubic Yards
D99	Other Disposal	Any Unit of Measure Listed Below
	Storage	
S01	Container	Gallons; Liters; Cubic Meters; or Cubic Yards
S02	Tank Storage	Gallons; Liters; Cubic Meters; or Cubic Yards
S03	Waste Pile	Cubic Yards or Cubic Meters
S04	Surface Impoundment	Gallons; Liters; Cubic Meters; or Cubic Yards
S05	Drip Pad	Gallons; Liters; Cubic Meters; Hectares; or Cubic Yards
	Containment Building Storage	Cubic Yards or Cubic Meters
S99	Other Storage	Any Unit of Measure Listed Below
	Treatment	
T01	Tank Treatment	Gallons Per Day; Liters Per Day
T02	Surface Impoundment	Gallons Per Day; Liters Per Day
T03	Incinerator	Short Tons Per Hour; Metric Tons Per Hour; Gallons Per Hour; Liters Per Hour; BTUs Per Hour; Pounds Per Hour; Short Tons Per Day; Kilograms Per Hour; Gallons Per Day; Metric Tons Per Hour; or Million BTU Per Hour
T04	Other Treatment	Gallons Per Day; Liters Per Day; Pounds Per Hour; Short Tons Per Hour; Kilograms Per Hour; Metric Tons Per Day; Short Tons Per Day; BTUs Per Hour; Gallons Per Day; Liters Per Hour; or Million BTU Per Hour
T80	Boiler	Gallons; Liters; Gallons Per Hour; Liters Per Hour; BTUs Per Hour; or Million BTU Per Hour
	Treatment (Continued)	**(for T81 – T94)**
T81	Cement Kiln	Gallons Per Day; Liters Per Day; Pounds Per Hour; Short Tons Per Hour; Kilograms Per Hour; Metric Tons Per Day; Metric Tons Per Hour; Short Tons Per Day; BTU Per Hour; Liters Per Hour; Kilograms Per Hour; or Million BTU Per Hour
T82	Lime Kiln	
T83	Aggregate Kiln	
T84	Phosphate Kiln	
T85	Coke Oven	
T86	Blast Furnace	
T87	Smelting, Melting, or Refining Furnace	
T88	Titanium Dioxide Chloride Oxidation Reactor	
T89	Methane Reforming Furnace	
T90	Pulping Liquor Recovery Furnace	
T91	Combustion Device Used in the Recovery of Sulfur Values from Spent Sulfuric Acid	
T92	Halogen Acid Furnaces	
T93	Other Industrial Furnaces Listed in 40 CFR 260.10	
T94	Containment Building Treatment	Cubic Yards; Cubic Meters; Short Tons Per Hour; Gallons Per Hour; Liters Per Hour; BTU Per Hour; Pounds Per Hour; Short Tons Per Day; Kilograms Per Hour; Metric Tons Per Day; Gallons Per Day; Liters Per Day; Metric Tons Per Hour; or Million BTU Per Hour
	Miscellaneous (Subpart X)	
X01	Open Burning/Open Detonation	Any Unit of Measure Listed Below
X02	Mechanical Processing	Short Tons Per Hour; Metric Tons Per Hour; Short Tons Per Day; Metric Tons Per Day; Pounds Per Hour; Kilograms Per Hour; Gallons Per Hour; Liters Per Hour; or Gallons Per Day
X03	Thermal Unit	Gallons Per Day; Liters Per Day; Pounds Per Hour; Short Tons Per Hour; Kilograms Per Hour; Metric Tons Per Day; Metric Tons Per Hour; Short Tons Per Day; BTU Per Hour; or Million BTU Per Hour
X04	Geologic Repository	Cubic Yards; Cubic Meters; Acre-feet; Hectare-meter; Gallons; or Liters
X99	Other Subpart X	Any Unit of Measure Listed Below

Unit of Measure	Unit of Measure Code	Unit of Measure	Unit of Measure Code	Unit of Measure	Unit of Measure Code
Gallons	G	Short Tons Per Hour	D	Cubic Yards	Y
Gallons Per Hour	E	Short Tons Per Day	N	Cubic Meters	C
Gallons Per Day	U	Metric Tons Per Hour	W	Acres	B
[illegible]rs	L	Metric Tons Per Day	S	Acre-feet	A
[illegible]s Per Hour	H	Pounds Per Hour	J	Hectares	Q
[illegible]ters Per Day	V	Kilograms Per Hour	X	Hectare-meter	F
		Million BTU Per Hour	X	BTU Per Hour	I

EPA ID Number | O | H | D | 9 | 8 | 0 | 5 | 8 | 7 | 3 | 6 | 4 | OMB#: 2050-0024; Expires 12/31/2014

Process Codes and Design Capacities (Continued)

EXAMPLE FOR COMPLETING Item 7 (shown in line number X-1 below): A facility has a storage tank, which can hold 533.788 gallons.

Line Number		A. Process Code (From list above)			B. PROCESS DESIGN CAPACITY (1) Amount (Specify)	(2) Unit of Measure	C. Process Total Number of Units	For Official Use Only
X	1	S	0	2	533.788	G	001	
	1	S	0	1	199,020	G	5 Areas	
	2	S	0	2	1,237,500	G	075	
	3	T	0	1	220,000	G	014	
	4							
	5							
	6							
	7							
	8							
	9							
1	0							
1	1							
1	2							
1	3							

Note: If you need to list more than 13 process codes, attach an additional sheet(s) with the information in the same format as above. Number the line sequentially, taking into account any lines that will be used for "other" process (i.e., D99, S99, T04, and X99) in Item 8.

8. Other Processes (Follow instructions from Item 7 for D99, S99, T04, and X99 process codes)

Line Number (Enter #s in sequence with Item 7)		A. Process Code (From list above)			B. PROCESS DESIGN CAPACITY (1) Amount (Specify)	(2) Unit of Measure	C. Process Total Number of Units	For Official Use Only
X	2	T	0	4	100.00	U	001	

9. Description of Hazardous Wastes - Enter Information in the Sections on Form Page 5

A. EPA HAZARDOUS WASTE NUMBER – Enter the four-digit number from 40 CFR, Part 261 Subpart D of each listed hazardous waste you will handle. For hazardous wastes which are not listed in 40 CFR, Part 261 Subpart D, enter the four-digit number(s) from 40 CFR Part 261, Subpart C that describes the characteristics and/or the toxic contaminants of those hazardous wastes.

B. ESTIMATED ANNUAL QUANTITY – For each listed waste entered in Item 9.A, estimate the quantity of that waste that will be handled on an annual basis. For each characteristic or toxic contaminant entered in Item 9.A, estimate the total annual quantity of all the non-listed waste(s) that will be handled which possess that characteristic or contaminant.

C. UNIT OF MEASURE – For each quantity entered in Item 9.B, enter the unit of measure code. Units of measure which must be used and the appropriate codes are:

ENGLISH UNIT OF MEASURE	CODE	METRIC UNIT OF MEASURE	CODE
POUNDS	P	KILOGRAMS	K
TONS	T	METRIC TONS	M

If facility records use any other unit of measure for quantity, the units of measure must be converted into one of the required units of measure, taking into account the appropriate density or specific gravity of the waste.

D. PROCESSES

1. PROCESS CODES:

For listed hazardous waste: For each listed hazardous waste entered in Item 9.A, select the code(s) from the list of process codes contained in Items 7.A and 8.A on page 3 to indicate all the processes that will be used to store, treat, and/or dispose of all listed hazardous wastes.

For non-listed waste: For each characteristic or toxic contaminant entered in Item 9.A, select the code(s) from the list of process codes contained in Items 7.A and 8.A on page 3 to indicate all the processes that will be used to store, treat, and/or dispose of all the non-listed hazardous wastes that possess that characteristic or toxic contaminant.

NOTE: THREE SPACES ARE PROVIDED FOR ENTERING PROCESS CODES. IF MORE ARE NEEDED:

1. Enter the first two as described above.
2. Enter "000" in the extreme right box of Item 9.D(1).
3. Use additional sheet, enter line number from previous sheet, and enter additional code(s) in Item 9.E.

2. PROCESS DESCRIPTION: If code is not listed for a process that will be used, describe the process in Item 9.D(2) or in Item 9.E(2).

NOTE: HAZARDOUS WASTES DESCRIBED BY MORE THAN ONE EPA HAZARDOUS WASTE NUMBER – Hazardous wastes that can be described by more than one EPA Hazardous Waste Number shall be described on the form as follows:

1. Select one of the EPA Hazardous Waste Numbers and enter it in Item 9.A. On the same line complete Items 9.B, 9.C, and 9.D by estimating the total annual quantity of the waste and describing all the processes to be used to store, treat, and/or dispose of the waste.
2. In Item 9.A of the next line enter the other EPA Hazardous Waste Number that can be used to describe the waste. In Item 9.D.2 on that line enter "included with above" and make no other entries on that line.
3. Repeat step 2 for each EPA Hazardous Waste Number that can be used to describe the hazardous waste.

EXAMPLE FOR COMPLETING Item 9 (shown in line numbers X-1, X-2, X-3, and X-4 below) – A facility will treat and dispose of an estimated 900 pounds per year of chrome shavings from leather tanning and finishing operations. In addition, the facility will treat and dispose of three non-listed wastes. Two wastes are corrosive only and there will be an estimated 200 pounds per year of each waste. The other waste is corrosive and ignitable and there will be an estimated 100 pounds per year of that waste. Treatment will be in an incinerator and disposal will be in a landfill.

Line Number		A. EPA Hazardous Waste No. (Enter code)				B. Estimated Annual Qty of Waste	C. Unit of Measure (Enter code)	D. PROCESSES									
								(1) PROCESS CODES (Enter Code)									(2) PROCESS DESCRIPTION (If code is not entered in 9.D(1))
X	1	K	0	5	4	900	P	T	0	3	D	8	0				
X	2	D	0	0	2	400	P	T	0	3	D	8	0				
X	3	D	0	0	1	100	P	T	0	3	D	8	0				
X	4	D	0	0	2												Included With Above

EPA ID Number | O | H | D | 9 | 8 | 0 | 5 | 8 | 7 | 3 | 6 | 4 |

OMB#: 2050-0024; Expires 12/31/2014

9. Description of Hazardous Wastes *(Continued. Use additional sheet(s) as necessary; number pages as 5a, etc.)*

...e Number		A. EPA Hazardous Waste No. (Enter code)				B. Estimated Annual Qty of Waste	C. Unit of Measure (Enter code)	D. PROCESSES									
								(1) PROCESS CODES (Enter Code)									(2) PROCESS DESCRIPTION (If code is not entered in 9.D(1))
	1	D	0	0	1	162,129	T	S	0	1	S	0	2	T	0	1	
	2	D	0	0	2	"	"	S	0	1	S	0	2	T	0	1	
	3	D	0	0	4			S	0	1	S	0	2	T	0	1	
	4	D	0	0	5			S	0	1	S	0	2	T	0	1	
	5	D	0	0	6			S	0	1	S	0	2	T	0	1	
	6	D	0	0	7			S	0	1	S	0	2	T	0	1	
	7	D	0	0	8			S	0	1	S	0	2	T	0	1	
	8	D	0	0	9			S	0	1	S	0	2	T	0	1	
	9	D	0	1	0			S	0	1	S	0	2	T	0	1	
1	0	D	0	1	1			S	0	1	S	0	2	T	0	1	
1	1	D	0	1	8			S	0	1	S	0	2	T	0	1	
1	2	D	0	1	9			S	0	1	S	0	2	T	0	1	
1	3	D	0	2	1			S	0	1	S	0	2	T	0	1	
1	4	D	0	2	2			S	0	1	S	0	2	T	0	1	
1	5	D	0	2	3			S	0	1	S	0	2	T	0	1	
1	6	D	0	2	4			S	0	1	S	0	2	T	0	1	
	7	D	0	2	5			S	0	1	S	0	2	T	0	1	
1	8	D	0	2	6			S	0	1	S	0	2	T	0	1	
1	9	D	0	2	7			S	0	1	S	0	2	T	0	1	
2	0	D	0	2	8			S	0	1	S	0	2	T	0	1	
2	1	D	0	2	9			S	0	1	S	0	2	T	0	1	
2	2	D	0	3	0			S	0	1	S	0	2	T	0	1	
2	3	D	0	3	2			S	0	1	S	0	2	T	0	1	
2	4	D	0	3	3			S	0	1	S	0	2	T	0	1	
2	5	D	0	3	4			S	0	1	S	0	2	T	0	1	
2	6	D	0	3	5			S	0	1	S	0	2	T	0	1	
2	7	D	0	3	6			S	0	1	S	0	2	T	0	1	
2	8	D	0	3	7			S	0	1	S	0	2	T	0	1	
2	9	D	0	3	8			S	0	1	S	0	2	T	0	1	
3	0	D	0	3	9			S	0	1	S	0	2	T	0	1	
3	1	D	0	4	0			S	0	1	S	0	2	T	0	1	
3	2	D	0	4	1			S	0	1	S	0	2	T	0	1	
3	3	D	0	4	2			S	0	1	S	0	2	T	0	1	
3	4	D	0	4	3			S	0	1	S	0	2	T	0	1	
3	5	F	0	0	1			S	0	1	S	0	2	T	0	1	
	6	F	0	0	2			S	0	1	S	0	2	T	0	1	

9. Description of Hazardous Wastes *(Continued. Use additional sheet(s) as necessary; number pages as 5a, etc.)*

Number		A. EPA Hazardous Waste No. (Enter code)				B. Estimated Annual Qty of Waste	C. Unit of Measure (Enter code)	D. PROCESSES (1) PROCESS CODES (Enter Code)									(2) PROCESS DESCRIPTION (If code is not entered in 9.D.1)
3	7	F	0	0	3	162,129	T	S	0	1	S	0	2	T	0	1	
3	8	F	0	0	4	"	"	S	0	1	S	0	2	T	0	1	
3	9	F	0	0	5			S	0	1	S	0	2	T	0	1	
4	0	F	0	0	6			S	0	1	S	0	2	T	0	1	
4	1	K	0	0	6			S	0	1	S	0	2	T	0	1	
4	2	K	0	1	6			S	0	1	S	0	2	T	0	1	
4	3	K	0	2	2			S	0	1	S	0	2	T	0	1	
4	4	K	0	3	0			S	0	1	S	0	2	T	0	1	
4	5	K	0	4	8			S	0	1	S	0	2	T	0	1	
4	6	K	0	4	9			S	0	1	S	0	2	T	0	1	
4	7	K	0	5	0			S	0	1	S	0	2	T	0	1	
4	8	K	0	5	1			S	0	1	S	0	2	T	0	1	
4	9	K	0	5	2			S	0	1	S	0	2	T	0	1	
5	0	K	0	6	0			S	0	1	S	0	2	T	0	1	
5	1	K	0	8	5			S	0	1	S	0	2	T	0	1	
5	2	K	0	8	6			S	0	1	S	0	2	T	0	1	
5	3	K	0	8	7			S	0	1	S	0	2	T	0	1	
[illegible]	4	K	0	9	5			S	0	1	S	0	2	T	0	1	
5	5	K	0	9	6			S	0	1	S	0	2	T	0	1	
5	6	K	1	0	5			S	0	1	S	0	2	T	0	1	
5	7	K	1	4	1			S	0	1	S	0	2	T	0	1	
5	8	K	1	4	2			S	0	1	S	0	2	T	0	1	
5	9	K	1	4	3			S	0	1	S	0	2	T	0	1	
6	0	K	1	4	4			S	0	1	S	0	2	T	0	1	
6	1	K	1	4	5			S	0	1	S	0	2	T	0	1	
6	2	K	1	4	7			S	0	1	S	0	2	T	0	1	
6	3	K	1	4	8			S	0	1	S	0	2	T	0	1	
6	4	U	0	0	2			S	0	1	S	0	2	T	0	1	
6	5	U	0	0	3			S	0	1	S	0	2	T	0	1	
6	6	U	0	1	9			S	0	1	S	0	2	T	0	1	
6	7	U	0	3	1			S	0	1	S	0	2	T	0	1	
6	8	U	0	3	7			S	0	1	S	0	2	T	0	1	
6	9	U	0	4	4			S	0	1	S	0	2	T	0	1	
7	0	U	0	5	1			S	0	1	S	0	2	T	0	1	
7	1	U	0	5	2			S	0	1	S	0	2	T	0	1	
[illegible]	2	U	0	5	5			S	0	1	S	0	2	T	0	1	

EPA ID Number | O | H | D | 9 | 8 | 0 | 5 | 8 | 7 | 3 | 6 | 4 |

OMB#: 2050-0024; Expires 12/31/2014

9. Description of Hazardous Wastes *(Continued. Use additional sheet(s) as necessary; number pages as 5a, etc.)*

Number		A. EPA Hazardous Waste No. (Enter code)				B. Estimated Annual Qty of Waste	C. Unit of Measure (Enter code)	D. PROCESSES (1) PROCESS CODES (Enter Code)									(2) PROCESS DESCRIPTION (If code is not entered in 9.D.1)
7	3	U	0	5	6	162,129	T	S	0	1	S	0	2	T	0	1	
7	4	U	0	5	7	"	"	S	0	1	S	0	2	T	0	1	
7	5	U	0	6	8			S	0	1	S	0	2	T	0	1	
7	6	U	0	6	9			S	0	1	S	0	2	T	0	1	
7	7	U	0	7	0			S	0	1	S	0	2	T	0	1	
7	8	U	0	7	1			S	0	1	S	0	2	T	0	1	
7	9	U	0	7	2			S	0	1	S	0	2	T	0	1	
8	0	U	0	7	5			S	0	1	S	0	2	T	0	1	
8	1	U	0	7	7			S	0	1	S	0	2	T	0	1	
8	2	U	0	7	8			S	0	1	S	0	2	T	0	1	
8	3	U	0	7	9			S	0	1	S	0	2	T	0	1	
8	4	U	0	8	0			S	0	1	S	0	2	T	0	1	
8	5	U	0	8	3			S	0	1	S	0	2	T	0	1	
8	6	U	0	8	4			S	0	1	S	0	2	T	0	1	
8	7	U	1	0	8			S	0	1	S	0	2	T	0	1	
8	8	U	1	1	0			S	0	1	S	0	2	T	0	1	
8	9	U	1	1	2			S	0	1	S	0	2	T	0	1	
[illegible]	0	U	1	1	3			S	0	1	S	0	2	T	0	1	
9	1	U	1	1	7			S	0	1	S	0	2	T	0	1	
9	2	U	1	1	8			S	0	1	S	0	2	T	0	1	
9	3	U	1	2	1			S	0	1	S	0	2	T	0	1	
9	4	U	1	2	4			S	0	1	S	0	2	T	0	1	
9	5	U	1	4	0			S	0	1	S	0	2	T	0	1	
9	6	U	1	5	4			S	0	1	S	0	2	T	0	1	
9	7	U	1	5	9			S	0	1	S	0	2	T	0	1	
9	8	U	1	6	1			S	0	1	S	0	2	T	0	1	
9	9	U	1	6	2			S	0	1	S	0	2	T	0	1	
0	0	U	1	6	5			S	0	1	S	0	2	T	0	1	
0	1	U	1	6	9			S	0	1	S	0	2	T	0	1	
0	2	U	1	7	1			S	0	1	S	0	2	T	0	1	
0	3	U	1	8	8			S	0	1	S	0	2	T	0	1	
0	4	U	1	9	1			S	0	1	S	0	2	T	0	1	
0	5	U	1	9	6			S	0	1	S	0	2	T	0	1	
0	6	U	2	1	0			S	0	1	S	0	2	T	0	1	
0	7	U	2	1	1			S	0	1	S	0	2	T	0	1	
[illegible]	8	U	2	1	3			S	0	1	S	0	2	T	0	1	

9. Description of Hazardous Wastes *(Continued. Use additional sheet(s) as necessary; number pages as 5a, etc.)*

Number		A. EPA Hazardous Waste No. (Enter code)				B. Estimated Annual Qty of Waste	C. Unit of Measure (Enter code)	D. PROCESSES									
								(1) PROCESS CODES (Enter Code)									(2) PROCESS DESCRIPTION (If code is not entered in 9.D.1)
0	9	U	2	2	0	162,129	T	S	0	1	S	0	2	T	0	1	
1	0	U	2	2	6	"	"	S	0	1	S	0	2	T	0	1	
1	1	U	2	2	7			S	0	1	S	0	2	T	0	1	
1	2	U	2	2	8			S	0	1	S	0	2	T	0	1	
1	3	U	2	3	9			S	0	1	S	0	2	T	0	1	

10. Map

Attach to this application a topographical map, or other equivalent map, of the area extending to at least one mile beyond property boundaries. The map must show the outline of the facility, the location of each of its existing intake and discharge structures, each of its hazardous waste treatment, storage, or disposal facilities, and each well where it injects fluids underground. Include all spring, rivers, and other surface water bodies in this map area. See instructions for precise requirements.

11. Facility Drawing

All existing facilities must include a scale drawing of the facility (see instructions for more detail).

12. Photographs

All existing facilities must include photographs (aerial or ground-level) that clearly delineate all existing structures; existing storage, treatment, and disposal areas; and sites of future storage, treatment, or disposal areas (see instructions for more detail).

13. Comments

10. Map: Appendix 1-1 - zoom-in of USGS 7.5 topo. Appendix 1-2A - satellite map (1-mile radius). Appendix 1-2B - satellite map (facility). Exhibit 1 in Part B application provides full USGS area topo.

11. Facility Drawing: Appendix 1-3. Exhibit 2 in Part B application provides full-size drawing.

12. Photographs: Appendix 1-4

Appendix 1-1

Clean Harbors Recycling Services of Ohio, LLC (USGS 7.5 Supplement)

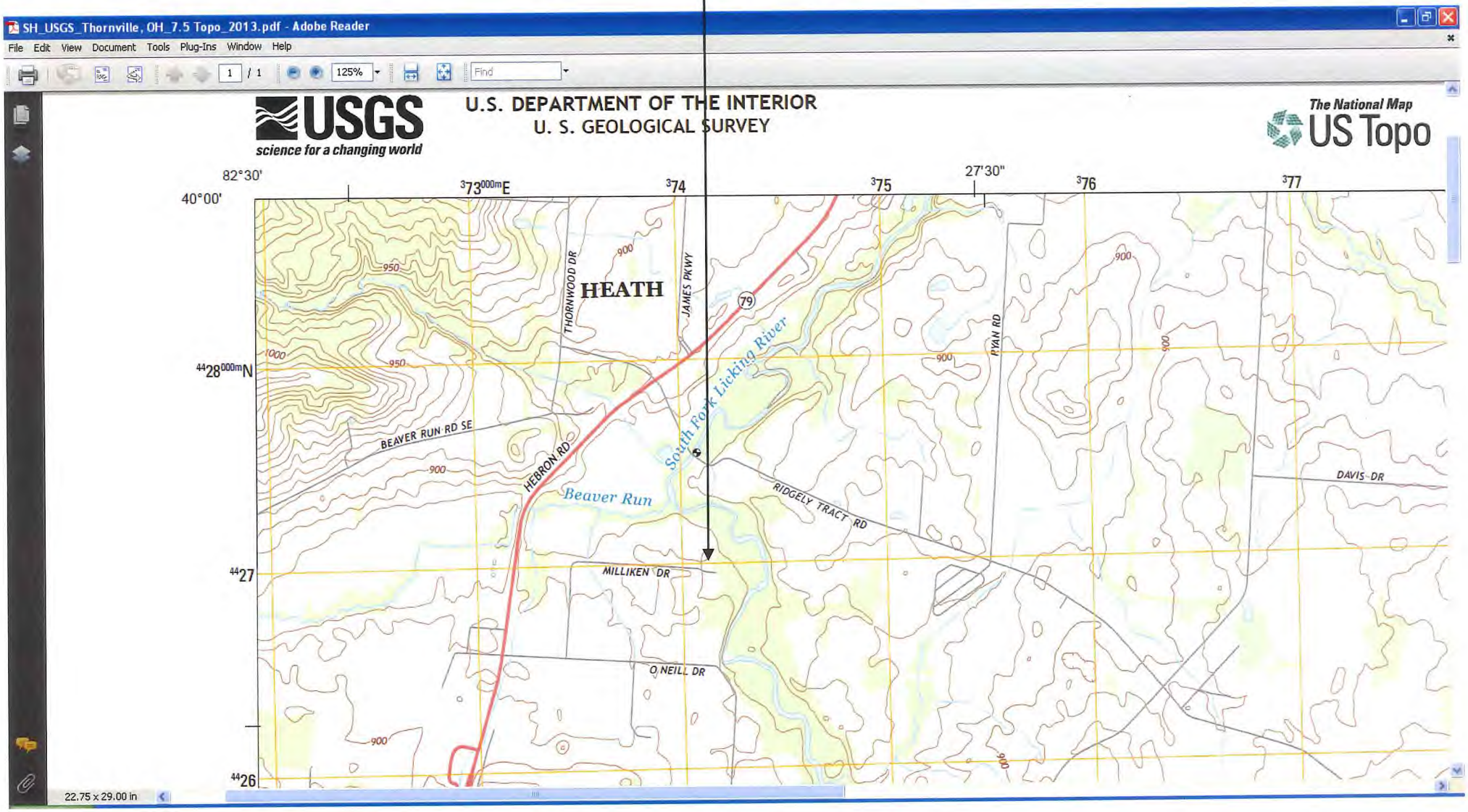

Appendix 1-2A

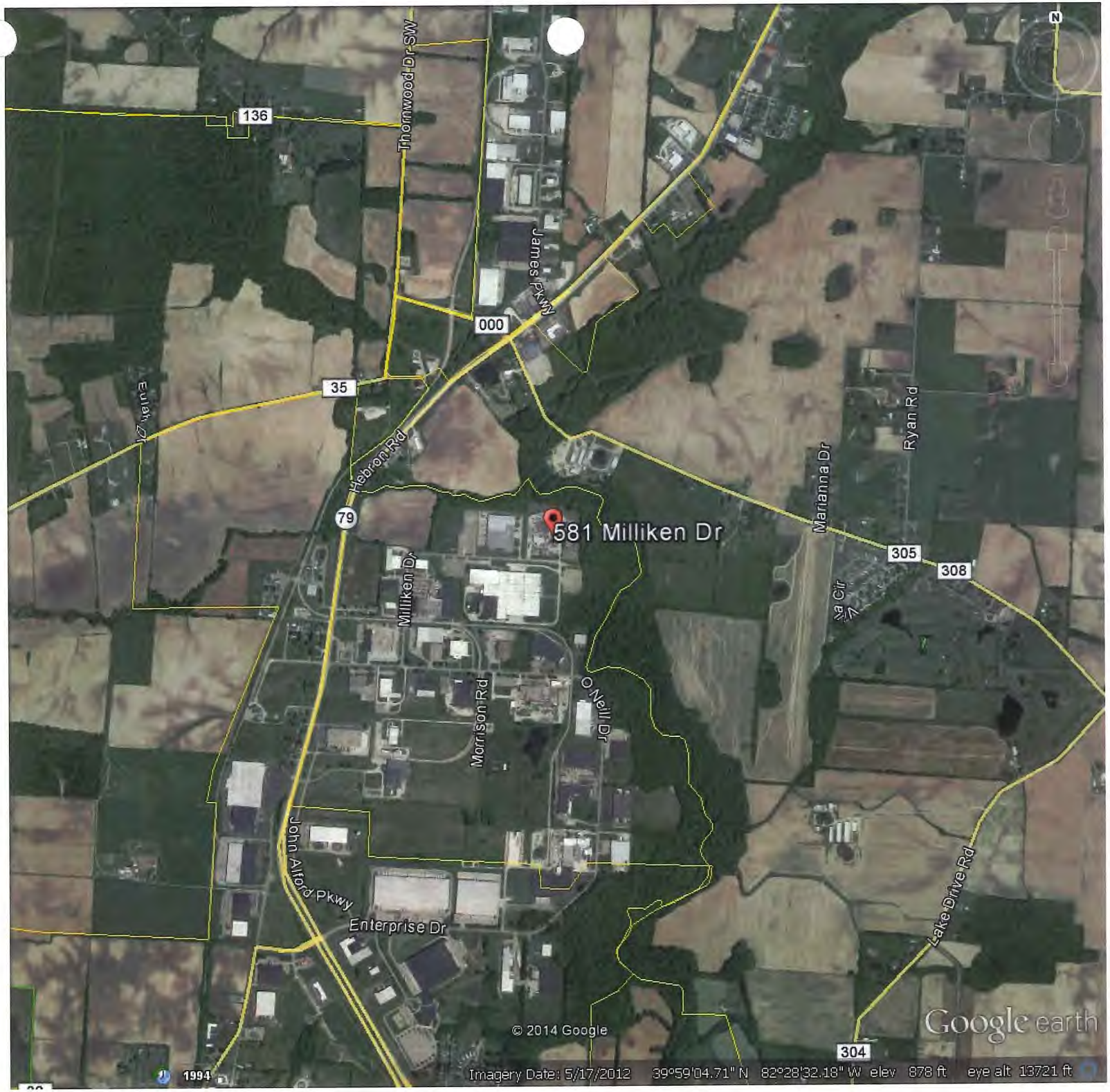
136
Thornwood Dr SW
James Pkwy
000
35
Euclid
Hebron Rd
79
581 Milliken Dr
Milliken Dr
Marianna Dr
Ryan Rd
305
308
Ma Cir
Morrison Rd
O Neill Dr
John Alford Pkwy
Enterprise Dr
Lake Drive Rd
304
© 2014 Google
Google earth
1994
Imagery Date: 5/17/2012 39°59'04.71" N 82°28'32.18" W elev 878 ft eye alt 13721 ft

Appendix 1-2B

581 Milliken Dr
© 2014 Google
Milliken Dr
Google earth
1994
Imagery Date: 5/17/2012 39°59'04.19" N 82°28'30.99" W elev 879 ft eye alt 1724 ft

Appendix 1-3

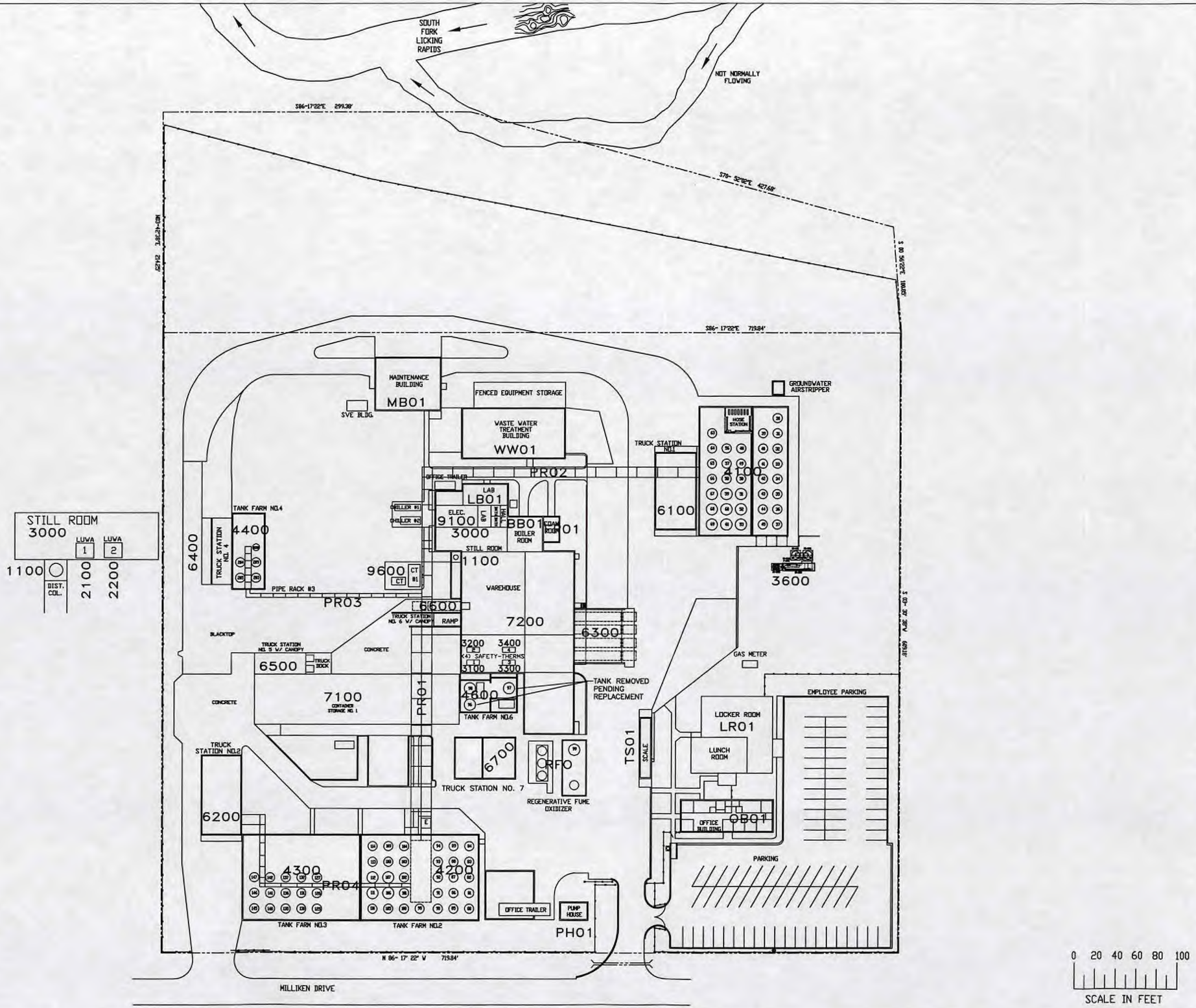

NOTES

PROCESS NUMBERING SYSTEM

1100	DISTILL. COLUMN NO.1
2100	LUWA NO. 1
2200	LUWA NO. 2
3000	STILL ROOM
3100	SAFETY-THERM NO. 1
3200	SAFETY-THERM NO. 2
3300	SAFETY-THERM NO. 3
3400	SAFETY-THERM NO. 4
3600	DEHYDRATION UNIT
4100	TANK FARM NO. 1
4200	TANK FARM NO. 2
4300	TANK FARM NO. 3
4400	TANK FARM NO. 4
4600	TANK FARM NO. 6
6100	TRUCK STATION NO. 1
6200	TRUCK STATION NO. 2
6300	TRUCK STATION NO. 3
6400	TRUCK STATION NO. 4
6500	TRUCK STATION NO. 5
6600	TRUCK STATION NO. 6
6700	TRUCK STATION NO. 7
7100	CONTAINER STORAGE AREA NO. 1
7200	CONTAINER STORAGE AREA NO. 2
9100	ELECTRICL ROOM
9600	COOLING WATER

FACILITY SUPPORT UNIT/AREA LETTERING SYSTEM

BB01	BOILER BUILDING
FP01	FIRE PROTECTION BUILDING
LB01	LABORATORY BUILDING
LR01	LOCKER ROOM
MB01	MAINTENANCE BUILDING
OB01	OFFICE BUILDING
PH01	PUMP HOUSE
PR01	PIPERACK
PR02	PIPERACK
PR03	PIPERACK
PR04	PIPERACK
RFO	REGENERATIVE FUME OXIDIZER
TS01	TRUCK SCALE
WW01	WASTE WATER TREATMENT BUILDING

CONTAINER STORAGE AREAS

STORAGE AREAS 2B, 2D, AND 2E ARE USED FOR STORAGE AND STAGING

STORAGE AREAS TS1 AND TS2 ARE USED FOR STORAGE ONLY

STORAGE AREAS 2C IS USED FOR STAGING ONLY

EXHIBIT 2

NO.	DESCRIPTION	CK.	PROJ.MGR. APPR.	PROCESS APPR.	DATE
5	RCRA PERMIT RENEWAL UPDATES	KMC			04/09/15
4	RCRA PERMIT RENEWAL UPDATE	KMC			12/12/14
3	ADDED DEHYDRATION UNIT & TANK FARM 4100 HOSE STATION	KMC JWC	JWC		10/29/10
2	AS BUILT REVISION	GK			03/07/03
1	ADD RFO/ DELETE HYDRAP.	GK			06/05/00

REVISIONS

PROPRIETARY STATEMENT

THIS DRAWING IS THE EXCLUSIVE PROPERTY OF CLEAN HARBORS AND IS PROPRIETARY AND CONFIDENTIAL INFORMATION. THIS DRAWING AND THE INFORMATION CONTAINED THEREIN MUST NOT BE DUPLICATED, USED, DIVULGED, REPRODUCED, COPIED, DISCLOSED OR APPROPRIATED IN WHOLE OR IN PART FOR ANY PURPOSE OTHER THAN AS EXPRESSLY AUTHORIZED BY CLEAN HARBORS THIS DRAWING MUST BE RETURNED PROMPTLY UPON REQUEST.

FILENAME 624-SP01 EXHIBIT 2 Rev. 5

SITE PLAN

CleanHarbors
581 MILLIKEN DRIVE, HEBRON, OHIO 43025 PHONE (740) 929-3532

SCALE	DRAWN	CHECKED	APPR.	OPERATION APPR	DATE
1"=50'-0"	DARIN S.				6/21/94

RECYCLE CENTER LOCATION
HEBRON, OHIO

DRAWING NO. 624-SP01 REV 5

Appendix 1-4

Tank Farm 1

Tank Farm 2

Tank Farm 4

Tank Farm 6

Container Storage Area 1

Container Storage Area 2 (East-Side)

Container Storage Area 2 (West-Side)

Truck Station 1

Truck Station 2

2

SECTION 2

FACILITY DESCRIPTION

This section provides a general description of the hazardous waste management facility, known as the Clean Harbors's Hebron Recycle Center, in accordance with OAC 3745-50-44. This description is intended to provide an overview of the facility and the hazardous waste management activities which take place within. More complete technical details are contained in separate sections of this permit application.

2.1 GENERAL DESCRIPTION [OAC 3745-50-44(A)(1)]

The Clean Harbors, Hebron Recycle Center is located in Hebron, Ohio. The facility is three-quarters of a mile east of State Route 79. The mailing address is:

Clean Harbors Recycling Services of Ohio, LLC
581 Milliken Drive S.E.
Hebron, Ohio 43025

The facility is a solvent recycle plant. It receives spent solvents from the company's network of facilities and all types of generators of waste, dry cleaning wastes (consisting of perchloroethylene and/or mineral spirits), and industrial solvents. In addition, other wastes from industrial sources are also brought in, stored and/or reclaimed at this facility. A more complete description of the wastes that the facility manages may be found in Section 3 of this permit application.

The contact persons and parties who coordinate the hazardous waste management activities at the plant can be accessed at the phone number below via extension 0:

Monte Londot
Facility Manager
Telephone #: (740) 929-3532 (ext. 104)

Todd Daignault
Operations Manager
Telephone #: (740) 929-3532

Steve Lear
Plant Engineer
Telephone #: (740) 929-3532

Assistance in this area is provided through Clean Harbors Environmental Compliance and Health and Safety Departments. These contacts can be accessed via the facility phone number:

Environmental Compliance Manager — Telephone #: (740) 929-3532 ext. 0
Health & Safety Manager — Telephone #: (740) 929-3532 ext. 0

2.2 TOPOGRAPHIC INFORMATION

2.2.1 General Requirements [OAC 3745-50-44(A)(19)]

Exhibit 11 is a topographic map showing the facility boundaries with five foot contour intervals of elevation. A complete legal description of the property boundaries can be found on Exhibit 7, the Property Survey. Hazardous Waste Storage Areas are located within a fenced boundary and are shown on Exhibit 2, the Existing Site Plan. The former Site Plan is shown in Exhibit 8. The property on which the Clean Harbors facility is located has two portions, with different zoning classifications. A small portion on the northern part of the property has been zoned for agricultural use. The rest of the property has been zoned for general manufacturing. All hazardous waste management operations at the Hebron facility are performed within the area zoned for general manufacturing. No hazardous waste operations have ever been performed in the northern portion of the property zoned for agricultural use.

Land uses in the surrounding areas of the facility, except to the North, correspond to general manufacturing, which includes warehousing and storage, light manufacturing, and heavy manufacturing subject to special requirements. The land located north of the facility has been zoned for agricultural use. Clean Harbors obtained a copy of the most recent available version of the Zoning Map for the area - see Exhibit 1A

The Hebron facility is protected by a plant wide system of hydrants and hose boxes for certain processing areas. These hydrants provide water and foam capabilities to supplement local fire fighting capabilities. In addition Tanker Station #1 and enclosed process container storage areas contain sprinkler systems. Exhibit 4, the Fire Protection System, shows the layout of each system and the location of the hydrants and hose boxes. Fire Extinguishers are located throughout the plant, Exhibit 5 shows these locations.

Drainage of the Clean Harbors property is naturally directed toward the South Fork of the Licking River. However, in the buildings where the containers are stored, run-off is controlled by a combination of curbs and roofs. Any drainage in non-regulated areas is intercepted by either storm sewers or process sewers. The property is outside the Zone A 100-year flood area. The run-off control system at the Hebron facility is depicted on Exhibit 9, Storm, sanitary and process sewer and systems map.

A wind rose for the nearest weather station (Columbus, Ohio) has been included as Attachment 2-1.

There are no injection wells at the Hebron facility. There are several groundwater monitoring wells located north of the Hebron facility, between the facility and the river (refer to Exhibit 11) as well as other locations around the general facility vicinity – refer to Section 5.

The South Fork of the Licking River is the only surface water feature within 1000 feet of the Hebron facility's hazardous waste storage areas. The river runs along the north edge of the Hebron facility property.

2.3 LOCATION INFORMATION

2.3.1 Seismic Standard [OAC 3745-54-18(A), 40 CFR 270.14(b)(11)]

The Clean Harbors Hebron Recycle Center is located in Licking County, Ohio. This location is not listed in Appendix VI of 40 CFR 264 as a "Political Jurisdiction in which Compliance with Holocene Time Fault Displacement must be Demonstrated."

2.3.2 Floodplain Standard [OAC 3745-50-44(A)(11)(c) and (d), 3745-54-18(B)]

The majority of the property is not located in the 100-year floodplain. No hazardous waste handling activities have ever been performed in the northeastern portion of the property, which is in the floodplain. The actual hazardous waste management facility is located outside the 100-year floodplain. This conclusion is based on the relevant Federal Insurance Administration Map of Flood Prone Areas, Exhibit 10. The delineated area of the floodplain is shown on Exhibit 11 along the South Fork of the Licking River and the boundaries appear to follow the 871-foot elevation contour. The lowest elevation for the active portion of the facility is 876 feet as shown in Exhibit 11. Therefore, this is not applicable.

2.4 TRAFFIC INFORMATION [OAC 3745-50-44(A)(10)]

Exhibit 5 depicts the existing and proposed facility traffic flow and the Evacuation Route at the Hebron Facility.

The site is three quarters of a mile east of State Route 79. Route 79 is a two-lane highway, currently being widened to four lanes, that has a speed limit of 50 m.p.h. It is the main route to Interstate 70. Access to the Site from Route 79 is through an industrial area (Newark Industrial Park). Trucks that serve the site, whether it be bulk or box, use Highway 79 as their major route onto O'Neil Road, east one-fourth block to Milliken Drive, three-fourths of a mile to the site. There is a left turn lane coming from the north (Route 79) onto O'Neil Road. There is a left turn lane onto Milliken Drive from O'Neil Road.

Hebron Recycle Center handles receipts and outgoing shipments of bulk solvents and dry cleaning waste every day. The solvent program material will vary on the customer and storage capacity.

Dry cleaning and other wastes/recyclable materials are also received in containers. The volume received varies depending on the day of the week and the season of the year, typically ranging from one to fifteen container loads per day. The facility has the operational capacity to receive several dozen trucks in a day, but generally receives around twelve trucks in a day.

The facility also receives dry cleaning product from other facilities for custom fractionation.

Shipments of other industrial solvents are received at the facility both in containers and in bulk loads. The facility typically receives between five and sixteen truck loads per week of containers of industrial solvents and between five and fourteen truck loads per week of bulk industrial solvents.

Industrial solvents in box trucks load and unload at loading bays at the east side of the warehouse. Industrial solvents arriving in bulk tankers load and unload into aboveground tanks at the truck stations. Bulk tank trucks load and unload at truck station No. 1. Any dumpster mud will be unloaded on the east side of the warehouse in truck station #3. The dry cleaning box trucks will load and unload on the east side of the warehouse in truck station #3. Because there are 4 docks for loading and unloading, there is little problem with traffic congestion on-site.

All driveways and loading areas are reinforced concrete. The employee parking area is asphalt. Milliken Drive is paved with blacktop along with O'Neil Road and Route 79. The on-site road consists of a minimum of 8" reinforced concrete and 12" of 304 gravel. The off-site roads consist of 1-½ " 404 surface, 1-½ " levelings and 6" bituminous aggregate base. The maximum load weight that the facility expects would be the bulk tank trucks, which would have a gross vehicle weight of 72,000 pounds. The load bearing capacity for the roads around the site is 78,000 pounds.

Attachment 2-1

COLUMBUS OH

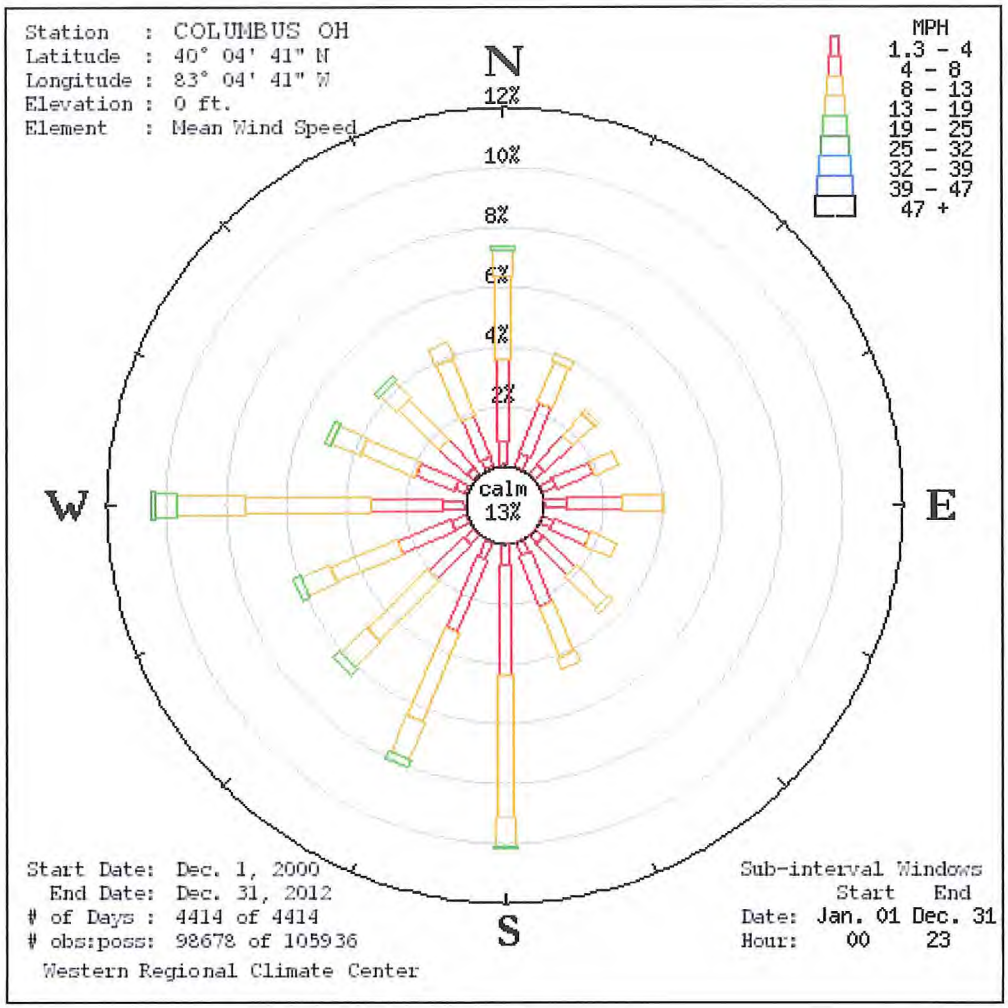

COLUMBUS OH - Wind Frequency Table (percentage)

Latitude : 40° 04' 41" N
Longitude : 83° 04' 41" W
Elevation : 0 ft.
Element : Mean Wind Speed

Start Date : Dec. 1, 2000
End Date : Dec. 31, 2012
# of Days : 4414 of 4414
obs : poss : 98678 of 105936

Sub Interval Windows

	Start	End
Date	Jan. 01	Dec. 31
Hour	00	23

(Greater than or equal to initial interval value and Less than ending interval value.)

Range (mph)	N	NNE	NE	ENE	E	ESE	SE	SSE	S	SSW	SW	WSW	W	WNW	NW	NNW	Total
1.3 - 4	0.7	0.5	0.4	0.5	0.8	0.4	0.3	0.5	0.7	0.6	0.4	0.5	0.7	0.4	0.2	0.3	7.8
4 - 8	2.7	1.8	1.3	1.3	1.8	1.3	1.5	1.8	3.6	2.6	1.6	1.9	2.4	1.4	1.3	1.5	29.9
8 - 13	2.8	1.5	1.0	0.9	1.3	0.9	1.5	1.8	4.7	3.2	2.8	2.4	4.2	2.0	1.9	2.0	34.9
13 - 19	0.9	0.3	0.2	0.1	0.1	0.1	0.2	0.4	1.0	1.4	1.2	1.0	2.3	1.0	0.8	0.6	11.5

19 - 25	0.1	0.0	0.0	0.0	0.0	0.0	0.0	0.0	0.1	0.3	0.3	0.3	0.7	0.2	0.2	0.1	2.3
25 - 32	0.0	0.0	0.0	0.0	0.0	0.0	0.0	0.0	0.0	0.0	0.1	0.1	0.1	0.0	0.0	0.0	0.4
32 - 39	0.0	0.0	0.0	0.0	0.0	0.0	0.0	0.0	0.0	0.0	0.0	0.0	0.0	0.0	0.0	0.0	0.0
39 - 47	0.0	0.0	0.0	0.0	0.0	0.0	0.0	0.0	0.0	0.0	0.0	0.0	0.0	0.0	0.0	0.0	0.0
47 -	0.0	0.0	0.0	0.0	0.0	0.0	0.0	0.0	0.0	0.0	0.0	0.0	0.0	0.0	0.0	0.0	0.0
Total(%)	7.3	4.0	2.9	2.8	4.1	2.8	3.5	4.5	10.2	8.0	6.4	6.2	10.5	5.0	4.3	4.5	86.9
Calm (<1.3)																	13.0
Ave Speed	8.6	7.7	7.5	6.9	6.8	7.1	7.7	8.1	8.7	9.6	10.3	9.8	11.0	10.2	10.0	9.1	7.9

COLUMBUS OH - Hourly Wind Statistics Table

Latitude : 40° 04' 41" N
Longitude : 83° 04' 41" W
Elevation : 0 ft.
Element : Mean Wind Speed

Start Date : Dec. 1, 2000
End Date : Dec. 31, 2012
# of Days : 4414 of 4414
obs : poss : 98678 of 105936

Sub Interval Windows

	Start	End
Date	Jan. 01	Dec. 31
Hour	00	23

Time - Time of Day (L.S.T.)
Speed - Average (Scalar) Speed in MPH
U-Vel - East-West Velocity, Positive to East
V-Vel - North-South Velocity, Positive to North
Res Spd - Vector Average (resultant) Speed in MPH
Res Dir - Vector Average (resultant) Direction
Dir Con - Directional Constancy (Res Spd/Speed)
Num Spd - Number of Wind Speed Observations
Num Dir - Number of Wind Direction Observations

Time	Speed	U-Vel	V-Vel	Res Spd	Res Dir	Dir Con	Num Spd	Num Dir
0	6.3	1.3	0.9	1.6	236	0.257	4183	4097
1	6.2	1.5	0.8	1.7	240	0.270	4203	4112
2	6.1	1.5	0.9	1.7	240	0.287	4192	4075
3	6.0	1.5	0.8	1.7	243	0.281	4185	4085
4	5.9	1.5	0.8	1.7	242	0.284	4191	4078
5	6.0	1.4	0.9	1.7	238	0.278	4183	4045
6	6.0	1.3	0.9	1.6	237	0.268	4164	4059
7	6.3	1.4	1.0	1.7	233	0.271	4167	4056
8	7.1	1.5	1.3	1.9	229	0.271	4172	4051
9	8.1	1.9	1.3	2.3	234	0.284	4175	4006
10	8.9	2.4	1.6	2.9	235	0.321	4183	3907
11	9.5	3.1	1.7	3.5	241	0.372	4181	3848
12	9.9	3.6	1.8	4.1	244	0.410	4153	3831
13	10.2	4.1	1.9	4.6	245	0.444	4185	3816

14	10.3	4.2	1.8	4.6	247	0.441	4203	3861
15	10.4	4.3	1.7	4.6	249	0.442	4215	3941
16	10.2	4.0	1.3	4.2	252	0.408	4205	3975
17	9.8	3.5	1.0	3.6	254	0.370	4209	4024
18	8.9	2.7	0.7	2.8	256	0.312	4202	4072
19	7.9	1.9	0.5	2.0	256	0.251	4087	3964
20	7.2	1.5	0.5	1.6	250	0.220	4224	4131
21	6.8	1.3	0.6	1.5	246	0.213	4219	4118
22	6.7	1.2	0.7	1.4	240	0.216	4220	4133
23	6.5	1.3	0.9	1.6	235	0.241	4187	4106
ALL	7.8	2.2	1.1	2.5	244	0.320	100488	96391

Return to Wind Rose Options

Return to WRCC Home Page

3

SECTION 3

WASTE CHARACTERISTICS

This section provides a general description of the wastes accepted and managed at the Clean Harbors Hebron, Ohio Recycle Center, as well as the procedures used to analyze and identify the various waste streams. This section introduces the Waste Analysis Plan in Appendix 3-1, which describes in more detail the reviews and analyses conducted to ensure proper and safe management of wastes. Clean Harbors provides this information to meet the requirements of OAC 3745-50-44(A)(2).

This permit application requests approval to store and process the waste streams listed in this Section and Appendix 3-1 and their associated waste codes. All waste codes received at the Hebron facility will be handled in accordance with all applicable regulations, including the land disposal restrictions of 40 CFR 268.

3.1 WASTE IDENTIFICATION

The Hebron Recycle Center specializes in the recovery and recycling of spent solvents and associated wastes. Therefore, the facility accepts a wide variety of spent solvent waste streams which may exhibit a wide variety of hazardous characteristics. These waste streams typically are designated as hazardous by U.S. EPA due to their ignitability and/or toxicity. In addition, the facility accepts non-hazardous waste streams for processing.

The Clean Harbors Hebron facility is designed and operated to allow the safe and efficient processing of both hazardous and non-hazardous waste streams. Non-hazardous waste control is an essential part of the facility's operating procedures. These waste streams are frequently recoverable or may have constituents or physical characteristics which can provide desirable combustion characteristics when blended with other hazardous and non-hazardous waste streams during the fuel blending processes. The types of non-hazardous waste streams accepted at the Hebron facility include solvents and solvent bearing materials, oils and oil bearing materials, and other wastes that are amenable to reclamation or blending into fuels. Non-hazardous waste will be accepted at the facility for storage and processing, or storage prior to subsequent shipment to off-site facilities.

The Hebron facility does not accept for storage, transfer, or processing, municipal garbage and refuse, radioactive wastes, and wastes that facility management deems to be extremely dangerous (e.g., explosive wastes).

The Hebron Recycle Center receives wastes from three different sources. The first source is the Clean Harbors/Safety-Kleen network of facilities and service centers (Branches). The second type of source is referred to as industry-specific sources. The third type of source is termed industrial or other sources.

Clean Harbors operates a network of facilities in North America providing solvent collection/transportation, storage and recycling/recovery/reclamation. Used solvent is sent from company facilities and customers to the HebronRecycle Centers where it is reclaimed. The reclaimed (clean) solvent is then returned to customers or sold in the marketplace

Dry-cleaning solvent wastes are also processed to recover the solvent content. The solvent is most often perchloroethylene (tetrachloroethylene), but sometimes mineral spirit

solvents are used by the dry cleaner. The first solvent is a F002 EPA waste type, and the second is a D001 waste type.

Certain other wastes resulting from the use of organic solvents are also handled at the Hebron Recycle Center. These include the solids, sludges and wastewaters that settle out of the used solvent during handling and processing:

1) Lint, paper, and oils settle or separate out of used dry cleaning solvent.
2) Oils, greases, carbons, and metals settle out of solvents used in metal parts cleaning and degreasing.
3) Water separated from solvents, phase separation in holding tanks before processing and physical separation during processing in the recycle units.

In addition to other waste codes, these wastes may also exhibit the TCLP characteristics and may be classified, for example, as EPA waste type D006 (cadmium) or D008 (lead).

Solid hazardous wastes generated on-site and unprocessable wastes received from small quantity and large quantity generators are transferred off-site to approved treatment or disposal facilities.

Spent solvent wastes from industries such as the chemical or pharmaceutical process industries received at the facility are classified as characteristic wastes (D-waste codes), non-specific source wastes (F-waste codes), listed wastes from specific sources (K-wastes), and commercial chemical products, manufacturing intermediates, or off-specification commercial chemical products (U-waste codes). Most of the time, a waste stream will be some combination of specific components, and be categorized as a D- or F-waste. Table 3-1 provides a list of the EPA waste codes that can be safely and efficiently managed at the facility.

Wastewaters contaminated with organics from other Clean Harbors's facilities and other industries are procesed at the Hebron Recycle Center. These wastes are classified as characteristic wastes (D-waste codes), non-specific source wastes (F-waste codes), or listed wastes from specific sources (K-wastes) as necessary. Most of the time, a waste stream will be some combination of specific components, and be categorized as a D- or F-waste. Table 3-1 provides a list of the EPA waste codes that can be safely and efficiently managed at the facility.

The generators of the wastes are held responsible by Clean Harbors for assigning the proper EPA waste code and providing waste characterization information which must be known to store and process their wastes, in accordance with OAC 3745-54-13(A)(2). Clean Harbors, however, verifies that the characterization provided on the generators' material survey forms and shipment manifests is accurate using receipt analysis procedures described in the Waste Analysis Plan (Appendix 3-1).

The Hebron Recycle Center uses gravity separation, distillation, and fractionation to recover or recycle organic solvents and similar materials. Still bottoms from recycle operations, components separated by processing, non-processable wastes, and sludge received from customers or other Recycle Centers will be blended for use in the industrial fuels program. Certain residuals from recycling may be sent off-site for additional processing, reuse, incineration, treatment or disposal.

The following sub-sections describe the various waste streams and related methods of processing conducted at the Recycle Center.

Industrial Source Wastes

a. **Solvents Processed for Custom Distillation (Toll Recycling)**

Clean Harbors customers are those who wish to buy the distillation or extraction service offered by Hebron Recycle Center rather than invest in the purchase of their own facilities and the training of their personnel. The following examples are representative of the customers purchasing this service and the solvents processed.

The solvent dimethylformamide (DMF) is used in the manufacture of synthetic leather. The cost of DMF is a major part of the total production cost; the quality of the finished product depends in part on the quality of the solvent used. The Hebron Recycle Center can recycle DMF for the manufacturer at a fraction of the cost of purchasing prime solvent and can allow the manufacturer to put to more efficient use the capital that would otherwise have been invested for distillation equipment to recover the DMF on-site.

Many pharmaceutical processes use solvents to extract active components from fermentation media or to purify intermediates or end products by recrystallization. These processes would not be economical if the solvent used could not be recycled. The Hebron Recycle Center and the customer establish specifications for both the used and recovered solvents and determine what an acceptable yield of recovered solvent might be. The "yield" is that amount of solvent contained in the used stream that is returned to the user, usually expressed as a percentage. All incoming material is analyzed, usually by gas chromatograph, to ensure that the used solvent received conforms to specifications contained in a preshipment qualification form. Data from this analysis is used to calculate yield data. The analysis and calculations are all recorded and are a part of the confidential business record of the company.

b. **Industrial Solvent Processing**

In general, the used solvents that the Hebron Recycle Center processes have been classified by the EPA as hazardous wastes from specific and non-specific sources (D001, the F and K series). The plant also handles solvents from other sources listed under the U series. These are identified on the Hazardous Waste Permit Information Form in Section 1 of this application. In addition, there are a number of solvents that are not listed wastes but do exhibit the characteristic of ignitability, for example butyl acetate. When this is the principal component of a used solvent stream, the appropriate classification would be D001. There are other solvents recycled at the Hebron facility that are hazardous due to a characteristic other than ignitability. For example, the facility may receive a solvent with a high flash point, such as n-methyl pyrrolidone, which is not listed or ignitable, that may exhibit a toxicity characteristic for benzene (D018). There are other high flash point materials that may also be received, such as diesel fuel, that would only exhibit a toxicity characteristic waste code of D018.

Table 3-2, at the end of Section 3, lists under broad categories the industries that use solvents in certain applications. For each application, the primary recoverable solvent is listed together with its flash point, upper and lower explosive limits.

Table 3-2 also includes the primary potential contaminants anticipated in each used solvent stream. The flash distillation process used in the recovery area is designed to separate the volatile solvent component from a non-volatile residue. In fact, a small amount of solvent is left in the residue, the still bottoms, to ensure that it remains fluid and pumpable.

c. **Used Solvent for Fuel Blending**

Certain solvents are not economically recoverable in their prime form. These are typically solvents of low intrinsic value (e.g., methanol), those where the user's specifications are unattainable, or where the mixture cannot be efficiently separated because of the formation of azeotropes, overlapping, or close boiling ranges. However, when properly blended and processed, these solvents can be a beneficial source of energy. The Hebron Recycle Center is equipped to process non-recoverable solvent mixtures with their still bottoms to produce valuable solvent based fuels.

In each of these end use applications at facilities classified as Industrial Furnaces, the combustion conditions are orders of magnitude more destructive than those specified in OAC 3745-57-40 through 47 for incinerators, and in each, application emission controls are in place and covered by existing regulations. Specifications are restrictive only for PCB's over 50 ppm, etc., and for other wastes that might adversely affect the operation of the unit or the properties of the finished product.

d. Wastewater contaninated with Organics

Wastewaters that are contaminated with organics that must be separated out before being treated for discharge. The majority of these wastes are those generated by other Clean Harbors facilities but may also be generated by industrial customers if Hebron Recycle Center has processing capability available. All solvents from this waste stream are added to the solvent based fuel produced from other solvent recycling conducted on-site (see Item c above). The water generated will be processed in the biological wastewater treatment system on-site.

Closed-Loop and Industry-Specific Sources Wastes

a. Dry Cleaning Wastes

Dry cleaning wastes collected from dry cleaning establishments by the Clean Harbors Service Centers are transported to the Hebron Recycle Center in containers. The dry cleaning wastes include used filter cartridges and contain residues of chlorinated dry cleaning solvents. These wastes are considered to be Listed Wastes from Non-specific Sources (waste code F002). Some dry cleaners use mineral spirits which are Ignitable Wastes (waste Code D001). Dry cleaning wastes are currently stored in permitted Container Storage Areas prior to processing in the Safety Therms.

The solvent commonly used in dry cleaning of clothing is tetrachloroethylene (also known as perchloroethylene). In some cases, mineral spirits are used. Hence, wastes generated from dry cleaning operations contain various concentrations of the solvent. Basically, wastes generated by dry cleaning facilities are limited to the following forms:

1. Cartridge Filter: In addition to the construction materials consisting of steel, paper, clay and carbon, the used cartridge retains solvent, oil and grease, and undissolved elements such as lint and soil. Solvent retained in the filter cartridge generally amounts to less than 50% of the total cartridge weight.

2. Muck: At some dry cleaning facilities, a mixture of powdered materials is used as the filter medium for the dry cleaning solvent, in lieu of the cartridge filter. This filter medium normally consists of diatomaceous earth and carbon. In addition to the lint, soil, oil, and grease retained by this medium, between 40 and 50 percent by weight of the "muck" is absorbed solvent.

3. Still Residue: After filtration, the dry cleaning solvent is distilled at the dry-cleaning establishment to remove the dissolved materials from the used solvent. The dissolved materials (still residues) are in liquid form and consist primarily of detergent, oil and grease, vinyl acetate (a sizing compound) and 20 to 30 percent of solvent.

4. Separator Water: Although the dry cleaning process primarily utilizes a solvent for cleaning purposes, some water is also generated in the cleaning process. This water is ultimately decanted from the solvent and disposed of as hazardous waste. If the water is decanted prior to the distillation process the waste is characterized as an F002 waste stream. If the water is decanted after the distillation process it may contain trace quantities of the dry cleaning solvent and therefore is typically characterized as a D039 hazardous waste.

b. Used oil for transfer

Clean Harbors is equipped to receive waste oils from a variety of generators, including auto shops, power authorities, gasoline depots, service stations and any company servicing vehicles. Used oil is collected from Clean Harbors customers and brought into the Recycle Center and stored in tanks.

Typically, waste oils received and/or stored at the facility may be transferred to other facilities for fuel blending or re-refining without processing or with limited processing at the facility. The used oil is transported off-site when an adequate amount has been accumulated in the storage tanks.

c. Solid Hazardous Waste for Transfer

The Hebron Recycle Center also serves as a transfer station for the accumulation of truckload shipments of solid hazardous waste from various locations to be shipped to the same destination. Drums in transfer are not opened on-site. The transfer activity is regulated under OAC 3745-53-12 for transporters. Transfer wastes temporarily stored in permitted storage areas will comply with all requirements for container storage and count toward the permitted storage capacity of the container storage area. Also, segregation will be maintained as specified in Section 4 of the permit application.

As noted above and in the General Facility Description, all wastes entering the site leave as:

- recycled solvent returned for reuse;
- solvent blend fuel;
- solid material for energy recovery or disposal; and
- solvent transferred to another Clean Harbors Recycle Center for processing.

Both the plant's operating capabilities and the final disposition of wastes brought on-site are taken into account in evaluating the hazardous nature of the waste being processed. In this context, the primary criteria are considered as follows:

D001 - Ignitability

Except for most chlorinated solvents, most other solvents handled are at least combustible, many being highly flammable. This has been taken into account in the design of the facility by providing appropriate warnings, adopting all the relevant fire codes in construction, and

providing fire fighting resources. All liquid wastes are accepted on this basis if they test as ignitable as classified under OAC 3745-51-21.

D002 - Corrosivity

The receipt of hazardous wastes with the corrosivity characteristic will only be in non-bulk containers. These containers will be segregated from all other incompatable non-bulk containers in permitted Container Storage Areas.

D003 - Reactivity

The Hebron Recycle Center does not accept any reactive wastes.

D004-43 - Toxicity

The principle contributors to the characteristic of toxicity are the heavy metals, herbicides/pesticides, and solvents. Certain other toxic wastes are also listed in OAC 3745-51-33. Liquid waste materials reported by the generator to be RCRA regulated herbicides, pesticides, or TSCA regulated PCB's greater than 50 ppm are not accepted for recovery or fuel blending. Wastes generated by the coatings' industry usually contain pigments which may include heavy metals such as lead, chromium, or cadmium. However, these heavy metals are acceptable components in the fuel blending program or for solvent recovery. Used oil also often contains heavy metals such as cadmium and lead. Many of the waste streams accepted at the Hebron facility contain TCLP levels of organics and/or metals. These wastes may be blended into the fuels to levels that meet the consumer's product specifications. The analytical procedures used to characterize the waste are the same as those used for any other waste processed at the facility. The assumption is made, therefore, without testing, that wastes accepted on site may, under certain circumstances, exhibit the characteristic of toxicity and are all treated as such.

3.2 WASTE ANALYSIS PLAN

The Waste Analysis Plan for the Hebron Recycle Center is provided in Appendix 3-1. This plan outlines the steps taken to ensure that the facility has sufficient information to verify the generator provided waste characteristic information. As most wastes received by the facility are designated as D- or F-wastes, the plan focuses on analyses designed to categorize the waste according to those codes. However, provisions are also included for analysis and categorization of those wastes defined as K- and U-wastes.

TABLE 3-1

CATEGORIES OF SPENT SOLVENTS RECEIVED AT THE HEBRON RECYCLE CENTER

U.S. EPA Hazardous Waste No.	Description
D001	Solid waste that exhibits the characteristic of ignitability, but is not, by itself listed as a hazardous waste
D002	Solid waste that exhibits the characteristic of corrosivity, but is not, by itself listed as a hazardous waste
D004	Solid waste exhibiting the characteristic of toxicity for arsenic at 5.0 mg/l or more
D005	Solid waste exhibiting the characteristic of toxicity for barium at 100 mg/l or more
D006	Solid waste exhibiting the characteristic of toxicity for cadmium at 1.0 mg/l or more
D007	Solid waste exhibiting the characteristic of toxicity for chromium at 5.0 mg/l or more
D008	Solid waste exhibiting the characteristic of toxicity for lead at 5.0 mg/l or more
D009	Solid waste exhibiting the characteristic of toxicity for mercury at 0.2 mg/l or more
D010	Solid waste exhibiting the characteristic of toxicity for selenium at 1.0 mg/l or more
D011	Solid waste exhibiting the characteristic of toxicity for silver at 5.0 mg/l or more
D018	Solid waste exhibiting the characteristic of toxicity for benzene at 0.5 mg/l or more
D019	Solid waste exhibiting the characteristic of toxicity for carbon tetrachloride at 0.5 mg/l or more
D021	Solid waste exhibiting the characteristic of toxicity for chlorobenzene at 100.0 mg/l or more
D022	Solid waste exhibiting the characteristic of toxicity for chloroform at 6.0 mg/l or more
D023	Solid waste exhibiting the characteristic of toxicity for o - cresol at 200.0 mg/l or more
D024	Solid waste exhibiting the characteristic of toxicity for m - cresol at 200.0 mg/l or more
D025	Solid waste exhibiting the characteristic of toxicity for p - cresol at 200.0 mg/l or more
D026	Solid waste exhibiting the characteristic of toxicity for cresol at 200.0 mg/l or more
D027	Solid waste exhibiting the characteristic of toxicity for 1,4 dichlorobenzene at 7.5 mg/l or more
D028	Solid waste exhibiting the characteristic of toxicity for 1,2 dichloroethane at 0.5 mg/l or more
D029	Solid waste exhibiting the characteristic of toxicity for 1,1 dichloroethylene at 0.7 mg/l or more
D030	Solid waste exhibiting the characteristic of toxicity for 2,4 dinitrotoluene at 0.13 mg/l or quantification limit
D032	Solid waste exhibiting the characteristic of toxicity for hexachlorobenzene at 0.13 mg/l or quantification limit
D033	Solid waste exhibiting the characteristic of toxicity for hexachlorobutadiene at 0.5 mg/l or more
D034	Solid waste exhibiting the characteristic of toxicity for hexachloroethane at 3.0 mg/l or more

TABLE 3-1

CATEGORIES OF SPENT SOLVENTS RECEIVED AT THE HEBRON RECYCLE CENTER

U.S. EPA Hazardous Waste No.	Description
D035	Solid waste exhibiting the characteristic of toxicity for methyl ethyl ketone (MEK) at 200.0 mg/l or more
D036	Solid waste exhibiting the characteristic of toxicity for nitrobenzene at 2.0 mg/l or more
D037	Solid waste exhibiting the characteristic of toxicity for pentrachlorophenol at 100.0 mg/l or more
D038	Solid waste exhibiting the characteristic of toxicity for pyridine at 5.0 mg/l or quantification limit
D039	Solid waste exhibiting the characteristic of toxicity for tetrachloroethylene at 0.7 mg/l or more
D040	Solid waste exhibiting the characteristic of toxicity for trichloroethylene at 0.5 mg/l or more
D041	Solid waste exhibiting the characteristic of toxicity for 2,4,5 – trichlorophenol at 400.0 mg/l or more
D042	Solid waste exhibiting the characteristic of toxicity for 2,4,6 - trichlorophenol at 2.0 mg/l or more
D043	Solid waste exhibiting the characteristic of toxicity for vinyl chloride at 0.2 mg/l or more
F001	The following spent halogenated solvents used in degreasing: tetrachloroethylene, trichloroethylene, methylene chloride, 1,1,1-trichloroethane, carbon tetrachloride, chlorinated fluorocarbons, spent solvent mixtures/blends used in degreasing, and still bottoms from the recovery of these spent solvents and spent solvent mixtures.
F002	The following spent halogenated solvents: tetrachloro-ethylene, methylene chloride, trichloroethylene, 1,1,1trichloroethane, chlorobenzene, 1,1,2-trichloro-1,2,2trifluoroethane, ortho-dichlorobenzene, trichlorofluoro- methane, 1,1,2-trichloroethane, spent solvent mixtures and blends, and the still bottoms from the recovery of these spent solvents and spent solvent mixtures.
F003	The following spent non-halogenated solvents: xylene, acetone, ethyl acetate, ethyl benzene, ethyl ether, methyl isobutyl ketone, n-butyl alcohol, cyclohexanone, methanol, spent solvent mixtures and blends, and the still bottoms from the recovery of these spent solvents and spent solvent mixtures.
F004	The following spent non-halogenated solvents: cresols and cresylic acid, nitrobenzene, spent solvent mixtures and blends, and still bottoms from the recovery of these spent solvents and spent solvent mixtures.
F005	The following spent non-halogenated solvents: toluene, methyl ethyl ketone, carbon disulfide, isobutanol, pyridine, benzene, 2-ethoxyethanol 2-nitropropane, spent solvent mixtures and blends, and the still bottoms from the recovery of these spent solvents and spent solvent mixtures.
F006	The following wastewater treatment sludges from electroplating: cadmium, hexavalent chromium, sludges from cyanide nickel, and cyanide (complexed)
K006	Wastewater treatment sludge from the production of chrome oxide green pigments
K016	Heavy ends or distillation residues from the production of carbon tetrachloride
K022	Distillation bottom tars from the production of phenol/acetone from cumene

TABLE 3-1

CATEGORIES OF SPENT SOLVENTS RECEIVED AT THE HEBRON RECYCLE CENTER

U.S. EPA Hazardous Waste No.	Description
K030	Column bottoms or heavy ends from the combined production of trichloroethylene and perchloroethylene
K048	Dissolved air flotation float from the petroleum refining industry
K049	Slop oil emulsion solids from the petroleum refining industry
K050	Heat exchanger bundle cleaning sludge from the petroleum refining industry
K051	API separator sludge from the petroleum refining industry
K052	Tank bottoms (leaded) from the petroleum refining industry
K060	Ammonia still lime sludge from coking operations
K085	Distillation or fractionation column bottoms from the production of chlorobenzene
K086	Solvent washes and sludges, caustic washes and sludges or water washes and sludges from cleaning tubs and equipment used in the formulation of ink from pigments, driers, soaps and stabilizers containing chromium and lead
K087	Decanter tank tar sludge from coking operations
K095	Distillation bottoms from the production of 1,1,1trichloroethane
K096	Heavy ends from the heavy ends column from the production of 1,1,1-trichloroethane
K105	Separated aqueous stream from the reactor product washing step in the production of chlorobenzenes
K141	Process residues from the recovery of coal tar, including, but not limited to, collecting sump residues from the production of coke from coal or the recovery of coke by-products produced from coal. This listing does not include K087 (decanter tank tar sludges from coking operations)
K142	Tar storage tank residues from the production of coke from coal or from the recovery of coke by-products produced from coal
K143	Process residues from the recovery of light oil, including, but not limited to, those generated in stills, decanters, and wash oil recovery units from the recovery of coke by-products produced from coal
K144	Wastewater sump residues from light oil refining, including, but not limited to, intercepting or contamination sump sludges from the recovery of coke by-products produced from coal
K145	Residues from naphthalene collection and recovery operations from the recovery of coke by-products produced from coal
K147	Tar storage tank residues from coal tar refining
K148	Residues from coal tar distillation, including, but not limited to, still bottoms
U002	Acetone
U003	Acetonitrile
U019	Benzene
U031	n-Butyl Alcohol
U037	Chlorobenzene
U044	Chloroform
U051	Creosote
U052	Cresol (Cresylic Acid)
U055	Cumene
U056	Benzene, hexahydro-

TABLE 3-1

CATEGORIES OF SPENT SOLVENTS RECEIVED AT THE HEBRON RECYCLE CENTER

U.S. EPA Hazardous Waste No.	Description
U057	Cyclohexanone
U068	Methylene bromide
U069	1,2 – Benzenedicarboxylic acid, dibutyl ester
U070	Benzene, 1,2 – dichloro-
U071	Benzene, 1,3 – dichloro-
U072	Benzene, 1,4 – dichloro-
U075	Methane, dichlorodifluoro-
U077	Ethane, 1,2 – dichloro-
U078	Ethene, 1,1 – dichloro-
U079	Ethene, 1,2 – dichloro-
U080	Methylene chloride
U083	Propane, 1,2 – dichloro-
U084	1-Propene, 1,3 – dichloro-
U108	1,4 – Diethyleneoxide
U110	Dipropylamine
U112	Ethyle Acetate
U113	Ethyl Acrylate
U117	Ethyl Ether
U118	Ethyl Methacrylate
U121	Trichlorofluoromethane
U124	Furfuran
U140	Isobutyl Alcohol
U154	Methyl Alcohol
U159	Methyl Ethyl Ketone (MEK)
U161	4-Methyl-2-Pentanone
U162	Methyl Methacrylate
U165	Napthalene
U169	Nitrobenzene
U171	2-Nitropropane
U188	Phenol
U191	2-Methyl-Pyridine
U196	Pyridine
U210	Tetrachloroethylene
U211	Carbon Tetrachloride
U213	Tetrahydrofuran
U220	Toluene
U226	1,1,1-Trichloroethane
U227	1,1,2-Trichloroethane
U228	Trichloroethylene
U239	Xylene

TABLE 3-2

WASTES CATEGORIZED BY INDUSTRY
Properties of Recoverable Solvents

Industry and Uses	Primary Solvents Recovered	Flash Point in °C[1]	Flammability LEL/UEL[2]	Potential Contaminant (Primary)[4]
1. GENERAL INDUSTRY				
WASH				
Finishing Boat Hulls and Parts	Acetone	-18	2.1/12.8	Polyester Resin Organic Pigments
Coating Toilet Seats	Thinner[3]	Variable	Possibly	Alkyd Resins Organic Pigments
Painting Light Fixtures	Thinner[3]	Variable	Possibly	Acrylic & Vinyl Resins Assorted Pigments
Furniture Finishing	Acetone	-18	2.1/12.8	Alkyd Resins Assorted Pigments
Transformer Finishing	Toluene	4.4	1.2/7	Acrylic Resins Metallic Pigments Organic Pigments
CLEANING				
Tool Cleaning	Mineral Spirits Toluene	37.7 4.4	0.9/6 1.2/7	Machine Oil
Anodized Parts	MEK	-6.7	1.8/10	Water, Oil
Computer Parts	Freon	None	None	Flux, Oil
Hospital Furniture	1,1,1, trichloroethane	None	8.0/10.5	Oil

TABLE 3-2

WASTES CATEGORIZED BY INDUSTRY
Properties of Recoverable Solvents

Industry and Uses	Primary Solvents Recovered	Flash Point in °C[1]	Flammability LEL/UEL[2]	Potential Contaminant (Primary)[4]
DEGREASING				
General	1,1,1, trichloroethane	None	8.0/10.5	Machine Oil
Chain Parts	Perchloroethylene	None	None	Machine
ETCHING				
Plastic Plates	Perchloroethylene Butanol	None 28.9	None 1.4/11.2	Cyrel Plastic
2. PAINT MANUFACTURERS[6]				
WASH				
Wash and Line Cleaning	Mineral Spirits	37.7	0.9/6	Assorted Pigments Assorted Resins
	Butyl Acetate	22	1.7/7.6	Epoxy Resins
	Ethyl Acetate	-4.4	2.2/11.5	Inorganic/Organic Pigments
	Toluene	4.4	1.2/7	Vinyl & Acrylic Resins Polyurethane Resins Metallic Pigments Alkyd Resins
	Ethyl Acetate	-4.4	2.2/11.5	Vinyl Resins
	Butyl Acetate	22	1.7/7.6	Acrylic Resins Inorganic Pigments
	MEK	-6.7	1.8/10	Metallic & Organic Pigments

TABLE 3-2

WASTES CATEGORIZED BY INDUSTRY
Properties of Recoverable Solvents

Industry and Uses	Primary Solvents Recovered	Flash Point in °C[1]	Flammability LEL/UEL[2]	Potential Contaminant (Primary)[4]
				Polyurethane & Latex Resins Epoxy Resins Inorganic Pigments
	Thinner	Variable	Possibly	Vinyl & Acrylic Resins Lacquer Resins Organic & Inorganic Pigments
Paint Manufacturers[5]	Acetone	-18	2.1/12.8	Vinyl & Alkyd Resins Acrylic Resins Latex Resins Metallic Pigments Inorganic & Organic Pigments
	Toluene	4.4	1.2/7	Alkyd & Acrylic Resins
	MEK	-6.7	1.8/10	Vinyl & Epoxy Resins Metallic & Organic Pigments
3. COATING & COATING MANUFACTURERS[6]				
WASH				
Coating Manufacturing	Toluene	4.4	1.2/7.0	Acrylic & Vinyl Resins
	MEK	-6.7	1.8/10	Epoxy Resins Metallic Pigments Inorganic & Organic Pigments
Coating Process	Toluene	4.4	1.2/7.0	Acrylic & Latex Resins
	MEK	-6.7	1.8/10	Nitrocellulose Water

TABLE 3-2

WASTES CATEGORIZED BY INDUSTRY
Properties of Recoverable Solvents

Industry and Uses	Primary Solvents Recovered	Flash Point in °C[1]	Flammability LEL/UEL[2]	Potential Contaminant (Primary)[4]
	Methanol	11.1	6.7/36	Inorganic & Organic Pigments
	Methyl-cellosolve	7.39	2.5/19.8	Inorganic & Organic Pigments
CLEANING				
Coating Process	Toluene	4.4	1.2/7.0	Vinyl Resins
	Isopropanol	11.7	2.0/12.0	Organic Pigments
Machine Cleaning	Thinner	Variable	Possibly	Vinyl Resins, Variable Organic Pigments
	MEK	-6.7	1.8/10	Vinyl & Metallic Resins Inorganic & Organic Pigments
	MIBK	22.8	1.4/7.5	Inorganic & Organic Pigments
	Toluene	4.4	1.2/7	Organic Pigments Vinyl Resins
	Heptane	-3.9	1.1/6.7	
Adhesive Cleaning	Butyl Acetate	22	1.7/7.6	Acrylic Resins
4. LEATHER				
Finishing	Butyl Acetate	22	1.7/7.6	Vinyl & Alkyd Resins Organic Pigments
Treating	Mineral Spirits	37.7	0.9/6	Grease, Water & Leather Fines

TABLE 3-2

WASTES CATEGORIZED BY INDUSTRY
Properties of Recoverable Solvents

Industry and Uses	Primary Solvents Recovered	Flash Point in °C[1]	Flammability LEL/UEL[2]	Potential Contaminant (Primary)[4]
5. PLASTIC AND MISC. CHEMICAL				
Plastic Manufacturing	Xylene	25	1/7	Latex Isobutyl Alcohol
Vinyl Stearate Manufacturing	Mixed Solvents	Variable	Possibly	Vinyl Acetate, Variable & Stearate
Acrylic Film Wash	Ethyl Acetate	-4.4	2.2/11.5	Acrylic Resins

Notes:

(1) Flash point is determined by the closed cup method.
None - flash point is over 200°F material is non-flammable.
Variable - properties vary depending on exact composition.

(2) Flammability limits in air, percent by volume, LEL-Lower explosive limit, UEL-Upper explosive limit.
Possibility - mixture of solvents is likely to be flammable but may not be, depending on exact composition.

(3) Not all potential contaminants are found in every shipment.

(4) Thinner is an industry name to represent a mixture consisting of a multitude of solvents.

(5) Listed individually to show the different solvent mixtures and the contaminants (potential) of each.

(6) High energy ignition source.

APPENDIX 3-1

WASTE ANALYSIS PLAN

CLEAN HARBORS RECYCLING SERVICES of OHIO, LLC

HEBRON RECYCLE CENTER

WASTE ANALYSIS PLAN
TABLE OF CONTENTS

SECTION	PAGE
1.0 INTRODUCTION	3-1-1
1.1 ACRONYMS AND DEFINITIONS	3-1-1
2.0 RECEIPT CONTROL AND ACCEPTANCE	3-1-2
2.1 WASTE STREAM PROFILE	3-1-2
2.1.1 SAMPLING, SAMPLE HANDLING AND RECORD KEEPING FOR INDUSTRIAL WASTE STREAMS	3-1-6
2.1.2 INDUSTRIAL SOURCE WASTE STREAM PROFILE (EVALUATION), ANALYTICAL PARAMETERS, AND TEST METHODS	3-1-7
2.2 SHIPMENT RECEIPT	3-1-8
2.2.1 ACCEPTANCE PROCEDURES	3-1-8
2.2.2 SAMPLING, SAMPLE HANDLING, AND RECORD-KEEPING	3-1-11
2.2.3 RECEIPT ANALYSIS	3-1-12
2.2.4 RECEIPT ANALYSIS -- "INDUSTRY SPECIFIC" SOURCE WASTES	3-1-17
2.2.5 RECEIPT ANALYSES -- "INDUSTRIAL SOURCE"	3-1-19
3.0 QUALITY ASSURANCE/QUALITY CONTROL PROGRAM	3-1-23
4.0 TABLES AND ATTACHMENTS	3-1-24

LIST OF TABLES

TABLE		PAGE
1	Prequalification and Conformance Testing Parameters	3-1-25
2	Supplemental Testing Parameters	3-1-26
3	Test Methods	3-1-28
4	Sampling Methods	3-1-32
5	Frequency of Instrument Inspection	3-1-33
6	Waste Acceptance Parameters	3-1-34

LIST OF ATTACHMENTS

1 Material Profile Form
2 Sample Waste Stream Profile Report
3 Analytical Results From Annual Recertification of "Industry Specific" Wastes
4 Typical Analysis of Industrial Wastes
5 Laboratory Quality Assurance Manual

1.0 INTRODUCTION

This document presents the Waste Analysis Plan for the Clean Harbors Recycling Services of Ohio, LLC (Clean Harbors) HRC (HRC). The Waste Analysis Plan describes the sampling procedures, the monitoring of waste shipments, and the quality assurance and quality control program to be followed to safely and effectively handle, store and process wastes received at the HRC facility. The purpose of the Waste Analysis Plan is to verify the waste characterization/classification information provided by the generator, to ensure the safe and effective handling of the wastes, and to protect the health and safety of the facility's personnel, as well as the general public. This information is submitted in accordance with the requirements of OAC 3745-50-44(A)(2).

The HRC specializes in solvent recycling. The raw materials for the plant are used (or spent) solvents received from industry-specific and industrial sources throughout North America. The products from the solvent recovery operations are specification solvents for reuse in industry.

The facility will also handle chemical by-products, intermediates, off specification, left over, or surplus materials, wastewaters contaminated with organics, and miscellaneous other items usable as components or ingredients in supplemental fuels. The fuels blending operation will produce a specification waste fuel suitable for use as supplemental fuel in the production of cement or in other industrial boilers and furnaces.

The HRC also receives wastes from other Transfer, Storage, and Disposal Facilities (TSDF) for recycling or reclamation.

Some of the solvents received at the facility are not recycled, but are transferred to other TSDF's. In this way, the Hebron facility also serves as a transfer station, storing solvents until they can be transferred to another facility.

Solid hazardous wastes generated on-site and unprocessable wastes received from small or large quantity generators are transferred off-site to other TSDF's.

1.1 ACRONYMS AND DEFINITION

Annual Recertification- annual sampling of representative incoming dry cleaning solvents for annual certification of analyses afforded for acceptance of the dry cleaning solvents at the facility

Chlorinated Solvents - A general term for the common industrial chemicals, such as methylene chloride; 1,1,1-trichloroethane; trichloroethylene and perchloroethylene, which are hydrocarbons containing at least one chlorine atom.

Dry Cleaning Solvent - The dry cleaning industry commonly uses two solvents, Perchloroethylene (Perc or Tetrachloroethylene) and Petroleum Naphtha, which are processed at Hebron. By far the most widespread and commonly used is Perc.

Energy Recovery - Used specifically to describe the beneficial capture of heat value of spent materials via burning in cement kilns, industrial boilers or furnaces.

Fuel Blending - The controlled mixing of (non recoverable) materials for burning to recover energy in cement kilns, industrial boilers or furnaces.

PCB's - Polychlorinated Biphenyls.

Recovery - This term is used in the Waste Analysis Plan to indicate the purification of a spent organic solvent by one or more operations. The solvent may be reused by the original generator or sold to other industrial customers.

Recycling - The use, reuse or reclamation (recovery) of a spent material into a usable product or raw material.

Reprocessing - The purification of used lubricating oil via treatment and filtration to produce a fuel.

Re-refining - The purification of used lubricating oil via distillation and hydro-finishing with the primary product being lube oil base stock.

Safety Data Sheet (SDS) – Previously called Material Safety Data Sheet (MSDS). Chemical/product specific information required by OSHA regulations of all hazardous materials which provides data relative to hazards associated with a chemical or chemical mixture as well as certain regulatory information/guidance.

Toll Recycling - A recycling service in which the customer's waste is segregated, reclaimed to the generator's specifications, and returned directly to the original generator for reuse.

VOA - Volatile Organic Analysis

Waste Stream - A waste stream is defined as a source of waste material that, as a result of business related contamination, can no longer serve the purpose for which it was produced without processing, and which can reasonably be expected to remain relatively consistent in composition during the period of the business relationship.

2.0 RECEIPT CONTROL AND ACCEPTANCE

Receipt control and acceptance procedures are important components of waste management at the HRC. Proper knowledge of the material received at the HRC is of major

importance to the safe and effective handling, storage, and processing of the accepted wastes. In addition, effective quality control helps assess the acceptability of the product and the cost effectiveness of the operation. Receipt control consists of at least two steps: waste stream profiling and shipment receipt control analysis.

2.1 WASTE STREAM PROFILE

Proper protection of human health and the environment requires that waste streams be properly evaluated. Clean Harbors requires knowledge of each particular waste before handling, storing or recycling those materials. This is achieved through historical data, knowledge of the industry or process generating the waste, or by individual evaluation for each generator stream, depending upon the waste stream source as described below.

The HRC receives wastes from two types of sources. The first type of source is termed industry-specific. The second source type is termed industrial or other sources. The HRC receives this waste from other Clean Harbors sites and/or generators/customers. The source types are discussed below.

The first source of waste is from what Clean Harbors refers to as "industry-specific sources". This source covers the dry cleaning wastes processed by the facility. Clean Harbors characterizes this waste stream by the operation, and as necessary, with chemical analyses developed from knowledge of the industry, the uses of the material in that industry, and over 20 years of historical data. The data for industry-specific customers is collected on an ongoing basis and compiled periodically. Annually ten (10) random representative samples are collected and analyzed, including TCLP, to ensure that the waste streams remain consistent. The analytical data is also updated whenever the industry implements a major process change that affects the waste stream. This evaluation provides the information necessary to properly handle, store and recycle this waste stream. Qualification/ annual recertification laboratory analyses may be conducted at the HRC laboratory, at another Clean Harbors site laboratory, or at a Clean Harbors approved laboratory in the future.

The second source of waste derives from "industrial and other sources." Due to the greater variability in the compositions, their application or use, and the source industry, Clean Harbors evaluates each stream from each generator separately. When an industrial source waste stream is considered, the generator must provide Clean Harbors with complete waste stream information. At a minimum this would include, a properly completed Generator Waste Material Profile Sheet (GWMPS or Profile) (Electronic profiles and signatures may be used instead of paper copy), safety data sheets (SDS) if applicable, and any analysis (pertinent to the approval process) performed on the waste stream. If a SDS or analytical data are not available to assist with the waste stream profile process, the generator's knowledge of the waste stream will be evaluated in order to determine if an adequate waste stream profile can be completed. If any of the required information is missing or incomplete, a prequalification sample and analysis may be required, or the customer may be further interviewed by Clean Harbors Central Profile Group (CPG) located in Braintree, MA. Qualification laboratory analyses may be conducted on-site, at another Clean Harbors facility, or at a Clean Harbors approved laboratory. The following criteria are examples of some of the key sections that will be evaluated on the GWMPS:

Process Generating the Waste - This information is necessary in order to assist in the determination and/or applicability of EPA hazardous waste codes.

Selection of EPA Waste Codes - If the generator is unsure of the appropriate EPA waste codes, a prequalification analysis may be conducted in order to properly characterize the waste stream, or the customer may be further interviewed by a Clean Harbors representative or provided additional tools developed by Clean Harbors to help complete the missing information.

U.S. DOT Description - A hazardous waste stream may not be shipped without a proper DOT shipping description. If this information is not available, analysis may be conducted, or the customer may be further interviewed by a Clean Harbors representative or provided additional tools developed by Clean Harbors in order to determine the correct DOT shipping description.

Notice of Land Disposal Restriction - Adequate information must be available on the Material Profile in order to properly complete a Notice of Land Disposal Restriction, if applicable. If this information is not available, analysis may be conducted, or the customer may be further interviewed by a Clean Harbors representative or provided additional tools developed by Clean Harbors in order to determine the correct LDR information.

Material Composition - Adequate waste stream material composition ranges must be available in order to conduct a health and safety review of the waste stream and to assist in the appropriate characterization of the material.

Flammability Range - This information is required in order to evaluate the waste stream for the ignitability characteristic and proper DOT shipping information.

pH Range - This information is required in order to evaluate the waste stream for the corrosive characteristic and proper DOT shipping information.

The CPG consists of trained scientists and/or engineers with experience in the hazardous waste, TSCA, DOT and other federal, state and local regulations and hazardous and non-hazardous waste determinations. The waste approval process, as shown in Figure 1 on the next page, is the procedure that Clean Harbors will utilize to make a technical judgement as to whether the proposed waste stream meets operational, regulatory, and permit criteria. The Waste Stream analysis may be conducted using the testing parameters and methods found in Tables 1, 2 and 3. The testing procedures described will only be modified in accordance with the permit modification requirement of OAC Rule 3745-50-51.

FIGURE 1
Waste Stream Profile Process (Industrial Sources)

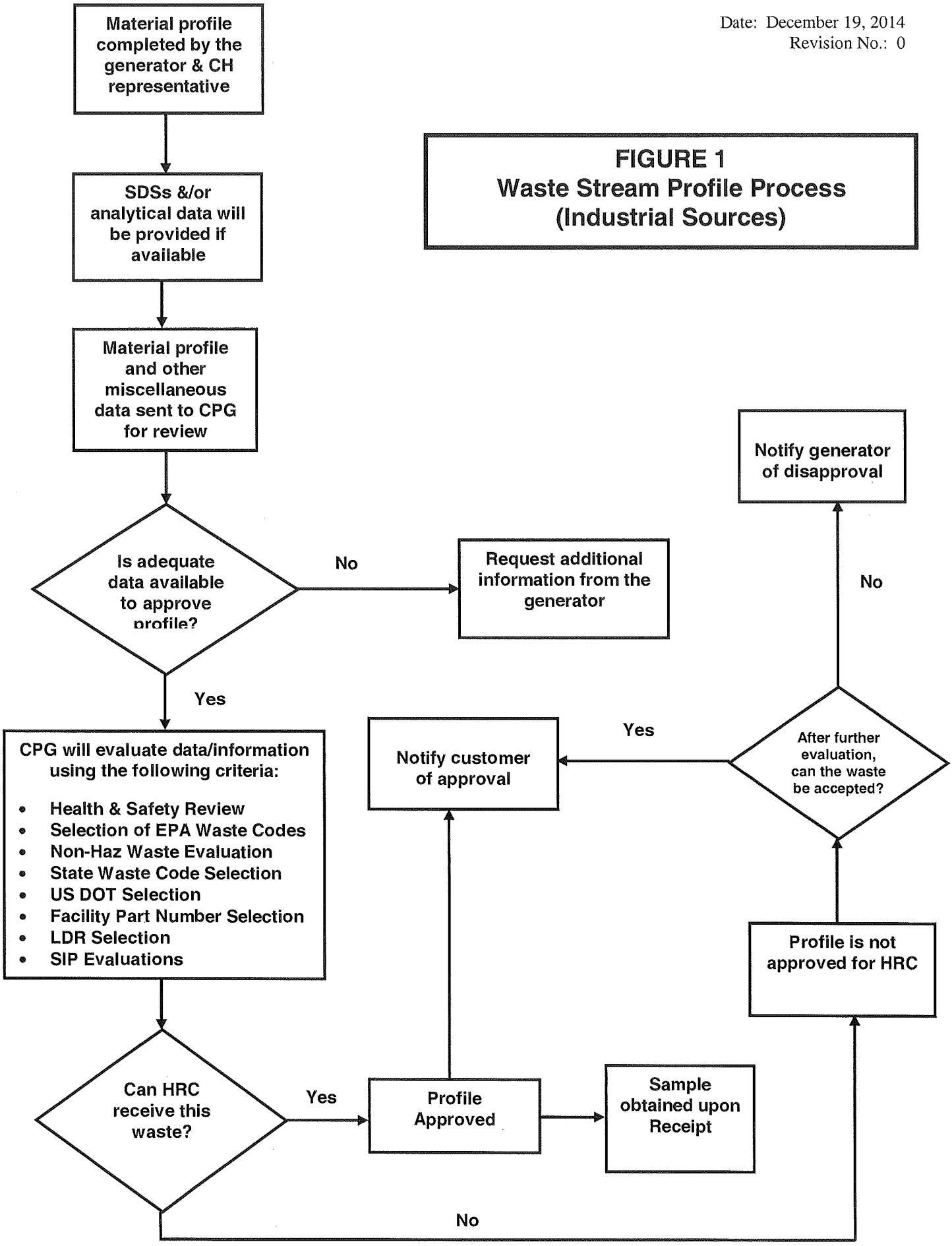

The final evaluation of the processability of the waste stream by Clean Harbors is based on a comparison of the waste information (provided by the generator on the GWMPS and Clean Harbors verification, when applicable) against:

1. Permit limitations and conditions;
2. Safety and health provisions;
3. Process capability and availability;
4. Compatibility of the material to the facility storage capabilities and processing operations;
5. Storage volume availability; and
6. Market factors.

Upon determination that a waste stream is acceptable for management at HRC, HRC shall provide the generator a written notice which states that HRC has been issued all necessary licenses and permits to accept the waste stream(s) under consideration. The notice shall be provided to the generator prior to shipment of the waste to HRC. Copies of all notices to generators will be available on-site or immediately available to HRC by facsimile. The shipments are usually arranged by Clean Harbors and are always conducted in accordance with all applicable requirements of the U.S. DOT, the OEPA, and the U.S. EPA. All wastes received at the HRC will be handled in accordance with the applicable regulations, including the land disposal restriction of 40 CFR 268.

The information provided on the GWMPS will be verified by the prequalification sample analysis, when deemed necessary, or the receipt analysis (fingerprint) as outlined in section 2.2.1. Receipt analyses are performed at the on-site laboratory.

2.1.1 Sampling, Sample Handling and Record-Keeping for Industrial Waste Streams

When a customer provides samples of waste for waste stream analysis, if necessary, or analytical services, the customer is required to certify that the sample is representative of the waste and that SW-846 sampling methods were used. Table 4 presents sampling devices used to obtain waste samples from different types of incoming vessels and wastes. All drums and tankers are sampled; composite samples are taken wherever appropriate. Basically, Coliwasa samples will be taken from drums and tankers containing liquids, and scoop samples will be taken from drums containing high percentages of solids and sludges.

The methods and equipment used for sampling waste materials will vary with the form and consistency of the waste materials to be sampled. Samples collected using these sampling protocols are considered by the U.S. EPA to be representative of the waste and are listed below:

1. Extremely viscous liquid - ASTM Standard D140,
2. Crushed or powdered material - ASTM Standard D346,
3. Soil or rock-like material - ASTM Standard D420,; Soil-like material - ASTM Standard D1452,
4. Fly-ash-like material - ASTM Standard D2234,

5. Containerized liquid wastes - "COLIWASA" described in "Test Methods for the Evaluation of Solid Waste, Physical/Chemical Methods", SW846, U.S. Environmental Protection Agency, Office of Solid Waste.

A record of all samples received by the laboratory is kept in a logbook or in a computerized data base. Each sample is identified by number, customer or source, waste type, and date received. Upon completion of lab analysis, the analyst records the date. In this way, all samples can be tracked through the laboratory and the current status of all samples can be determined.

Hazardous waste samples are retained for a minimum of one month (four weeks) after the analysis is completed and then disposed of at the end of the retention period.

Data and analytical results from waste stream profile evaluations are used to determine the specifics of the waste disposition. To keep the waste evaluation data current, Clean Harbors repeats the evaluations, minimally, when the generator notifies Clean Harbors of changes in the customer's (generator's) waste generating process that necessitates the re-qualification or re-evaluation of the altered waste characteristics. Additionally, the customer must have had at least one acceptable shipment to Clean Harbors of the subject waste stream in question within the previous 24 months for the waste characterization data to be considered current.

2.1.2 Industrial Source Waste Stream Profile (Evaluation), Analytical Parameters, And Test Methods

The processing capabilities at HRC are broad and flexible, and thus allow for a wide range of acceptability of wastes. The waste streams typically received for processing at HRC are designated as hazardous by the U.S. EPA and OEPA due to their ignitability and/or toxicity. In addition, as mentioned in Section 1, the facility accepts non-hazardous waste streams. Both hazardous (listed and characteristic) and non-hazardous wastes are accepted for storage, solvent recovery, fuel blending, or storage prior to shipment to off-site facilities. Therefore, the wastes received may exhibit a wide variety of hazardous characteristics. A discussion of the wastes received at the Hebron facility is presented in Section 3 of this RCRA Part B permit application.

Various parameters of wastes, as shown in Table 1, are used to initially characterize wastes and to further confirm (upon shipment) that the waste matches the manifest, shipping papers, waste characterization, previous shipments, or any combination of these identifying data. Laboratory analyses may be conducted on-site or at another Clean Harbors approved laboratory. Methods for the analysis of specific parameters are described in Table 3. All analysis conducted at a Clean Harbors approved laboratory will be conducted using methods listed in Table 3 (COC documentation will be as specified by the receiving laboratory and SDSs and any other appropriate documentation received with the sample will be copied and sent with the sample) when the HRC laboratory is not able to perform the required analysis.

For waste stream profile (evaluation) analyses, which is deemed necessary by Clean Harbors, the data provided by the generator is supplemented with analysis of the representative sample. The sample documents are received and a preliminary disposition determination is made

by the receiving personnel as to whether it is recoverable or should be used for fuels. The sample is first assessed for phase description.

Phase Character

* Single Phase Liquids (includes semi-stable mixable multiphase);
* Multiphase Liquids;
* Solids - Minimal Liquids; and
* Solids - Significant Amount of Liquid.

Based upon the phase clarification and the preliminary disposition determination, a set of analyses is assigned. All samples will undergo the following evaluations:

- Visually Determined Characteristics (e.g., color, obvious viscosity);
- PCBs;
- Radioactivity (prequalification, only);
- Specific Gravity (except solids and high viscosity samples);
- pH (aqueous phase only in multiphase materials/water extraction for non-aqueous waste streams); and
- Viscosity (if deemed necessary visually).

Other tests, such as volatile organic analyses by gas chromatography, flammability, and recovery by distillation are done specific to the phase classification and intended disposition. Tables 1, 2, and 3 outline the respective testing parameters and analyses that may be assigned. The analyses are revised as technology and methodologies evolve.

2.2 SHIPMENT RECEIPT

Upon arrival at the facility, each shipment of waste is subjected to receipt procedures as described below.

2.2.1 Acceptance Procedures

Having previously determined, through waste stream profile evaluation that the waste is acceptable, the second receipt control step occurs upon actual delivery to HRC. When a shipment arrives at HRC, the manifest(s) accompanying the shipment is (are) reviewed for completeness and for accuracy against the waste actually arriving at the facility. Information that is checked includes:

- Generator Name, Address, EPA ID, and Phone Number;
- Transporter Name and EPA ID;
- Facility Name, Address, EPA ID, and Phone Number;
- DOT Waste Description;
- U.S. EPA Waste Code;
- Quantity;

- Names, Signature, and Date of Generation and Transport; and
- State specific regulations.

Simultaneously, the waste shipment is inspected for leaks or other packaging problems. If a problem is identified, the facility office is notified and appropriate measures are taken to correct, cleanup and (if necessary) return the waste to the generator, in compliance with applicable U.S. DOT, OEPA, and U.S. EPA regulations.

Waste containers accepted at the facility must be properly labeled and marked. Containerized waste shipments are checked for proper labeling and marking, and the information on the hazardous waste label is checked against the manifest.

After or while checking the paper work, waste samples are obtained and analyzed. Sample analysis results are compared against the acceptance criteria set out in the waste profile and against permit/authorization limitations. Receipt analysis for incoming waste streams shall be conducted within five days of receipt of the waste.

In accordance with regulations concerning manifesting, any discrepancy is first discussed with the generator. If it cannot be reconciled, but the material can otherwise be accepted, a manifest discrepancy report is filed with the OEPA and a copy sent to the generator. Alternately, the shipment must be rejected.

If it is determined that the shipment can be received, the manifest is signed and a copy of the manifest is given or sent to the transporter. Within 30 days of delivery, a copy of the completed manifest is returned to the generator.

Clean Harbors reserves the right that if, based upon information or analysis obtained at any time, the waste material is found to be different from what was represented to be shipped, or it cannot be managed at the facility, the shipment acceptance may be revoked and the shipment rejected and returned to the generator or sent to an alternate facility for proper disposal. This may occur even after the manifest has been signed, the shipment unloaded, and the transporter released. In the event that this happens, the waste will be rejected on the original manifest or a Clean Harbors generator manifest. All applicable state and federal regulations will be followed in these cases (i.e., manifesting, proper shipping requirements, isolating incompatible waste, indication of the rejection in the operating log, purging of the tank system (if needed), etc.).

If HRC conducts the receipt analysis and determines that the facility cannot accept the waste, and that no re-evaluation and/or reanalysis is necessary, Clean Harbors will reject the waste back to the generator or send it to an appropriate alternate TSD within 10 days of completing the receipt analysis.

If HRC determines that the incoming wastes require resampling or reanalysis prior to determining a disposition of the material, this action shall be completed within 14 days of the original receipt analysis. Once the waste is resampled, if Clean Harbors determines that HRC cannot accept the waste, Clean Harbors must reject the waste back to the generator or send it to

an appropriate TSD within 10 days of receipt of the resample analysis results. (A total of 24 days from the original sample date.)

The information review process covers the following items:

1. Safety and health provisions;
2. Permit limitations and conditions;
3. Process capability and availability;
4. Compatibility of the material to the facility storage and operations;
5. Storage volume availability;
6. Generator Name and ID;
7. Transporter Name and ID;
8. Facility Name and ID;
9. DOT Waste Description;
10. U.S. EPA Waste Code;
11. Quantity;
12. Primary Analytical Results;
13. Secondary Analytical Results;
14. State Specific Regulations; and
15. Notice of Land Disposal Restriction (if applicable).

When a bulk load is accepted, it is assigned to a storage tank and off-loaded into that tank. The facility maintains operating records of the receiving tank for each off-loaded shipment. The facility also maintains current data on the contents of each tank including a description of its contents, quantity of wastes, and the date each period of storage begins, in accordance with 40 CFR 268.50(a)(2)(ii).

The HRC does not accept wastes that are not compatible with the materials of construction of the on-site waste storage tanks. Compatibility of incoming wastes with the receiving tanks is ensured by utilizing ASTM Standard D-5058 "Standard Test Methods For Compatibility Screening Analysis Of Waste." If there is any evidence of a reaction, the materials will be deemed unsuitable for consolidation at the existing ratio. If no reaction occurs, the materials will be deemed compatible and suitable for consolidation. The receiving fingerprint analysis verifies that the waste received corresponds to the waste characterized during the waste stream profile evaluation stage. The pH of a material is the most common characteristic that would cause an incompatibility with tanks or materials. During the waste stream profile evaluation the volatile organic composition is reviewed to ensure that there are no components that would be reactive or incompatible with tank materials of construction or other wastes. Although volatile organic compounds are typically all compatible, HRC utilizes procedures to ensure that different waste streams are not mixed. For example, a waste 1,1,1-trichloroethane stream is only put into tank(s) designated for that material. This is done mainly to ensure that the incoming solvent streams remain as pure as possible, but this also ensures that incompatible materials are not mixed. Prior to storing a material in a tank that previously contained a different waste type, the compatibility with any residue remaining in the tank is verified by the facility laboratory or the tank is cleaned. In addition, for waste streams that are to be fuel blended, waste

stream compatibility tests are conducted by the facility laboratory prior to the blending process for co-mingled waste compatibility, polymerization potential and water compatibility. HRC does not accept municipal garbage and refuse, infectious wastes, radioactive wastes, liquid wastes which are known to be RCRA regulated herbicides, pesticides, TSCA regulated PCB's greater than 50 ppm, or wastes that the facility management deems to be extremely dangerous (e.g., explosive wastes). Dry cleaning wastes described in section 3.1., received in drums are always bulked into storage tanks before sampling, while other types of containerized wastes are sampled from containers prior to emptying.

When a containerized (drum) load of industrial waste is accepted, a control number and date of receipt is marked on each drum, and the drums are transferred from the unloading area to one of the permitted drum storage areas. The labeling and marking identifies the contents of each of the drums. An entry as to the specific storage area used for each shipment is made in the receipt log.

Individual containers of waste from "industry-specific sources" are not marked with a control number; however each shipping pallet of containers is marked with a control number. A log is maintained that details the generators relative to the control number. The log details the generator identification, storage location, EPA waste code(s), manifest document number, receipt date, handling code and number of containers. These containers are properly labeled and marked, and are handled separately from industrial and other wastes. (See section 2.2.4)

Containerized liquid waste is stored inside a container storage area, out of direct sunlight and within secondary containment.

2.2.2 Sampling, Sample Handling and Record Keeping

HRC uses standard procedures for sampling hazardous waste and handling samples of that waste. The methods and equipment used in sampling materials are based on 40 CFR, Part 261, Appendix I.

The methods and equipment used for sampling waste materials will vary with the form and consistency of the waste materials to be sampled. Samples collected using the sampling protocols listed below, for sampling waste with properties similar to the indicated materials, are considered by the U.S. EPA to be representative of the waste.

1. Extremely viscous liquid - ASTM Standard D140;
2. Crushed or powdered material - ASTM Standard D346;
3. Soil or rock-like material - ASTM Standard D420; Soil-like material - ASTM Standard D1452;
4. Fly-ash-like material - ASTM Standard D2234; and
5. Containerized liquid wastes - "Coliwasa" described in "Test Methods for the Evaluation of Solid Waste, Physical/Chemical Methods", SW 846, U.S. Environmental Protection Agency, Office of Solid Waste.

Table 4 presents the sampling methods used by HRC for sampling hazardous wastes. All drums and tankers are sampled following Clean Harbors standard procedure, except for the "industry- specific source" wastes as described in Section 2.2.4. Waste receipts from those sources are combined into a holding tank and a sample of the holding tank is evaluated. When a customer provides samples of waste for waste stream profile analyses or analytical services, the customer is required to certify that the sample is representative of the waste generated.

The sampling devices in use at HRC are the COLIWASA and Scoop Samplers. Both of these devices are decontaminated by wiping down the equipment after each use. Both of these devices are considered disposal items so no maintenance is performed on either in the event that wear and tear makes them unusable. All materials used in the decontamination and any worn sampling devices are processed on-site in the Safety-Therm processing units.

The following paragraphs describe the sample handling procedures for HRC. Prior to and during analysis, samples are stored in the laboratory at HRC. The label information assures that samples are properly tracked and easily identified.

A record of all samples received by the laboratory is kept in a logbook or in a computerized data base. Each sample is identified by number, customer or source, waste type, and date received. Upon completion of the lab analysis, the analyst records the date. In this way, all samples can be tracked through the laboratory and the current status of all samples can be determined. The results from the analytical testing are recorded either on paper forms of electronic forms. The forms may be modified or changed for a particular situation to improve the usefulness or data accessibility.

Records of all waste analyses conducted during the past year are kept in the operating records of the facility in order to document that HRC has sufficient analytical information on parameters including water reactivity and flammability to safely handle ignitable wastes in accordance to OAC 3745-54-17(c).

Hazardous waste samples are retained for a minimum of one month (four weeks) after the analysis is completed and then disposed of at the end of the retention period.

Lab waste (samples, residues, and standards) disposal is conducted in accordance with federal and local regulations.

2.2.3 Receipt Analysis

The waste codes accepted at HRC are identified in the Waste Characteristics section (Section 3) of this permit application.

The waste streams typically received for handling and processing at HRC are designated as hazardous wastes by the U.S. EPA and the State of Ohio, due to their ignitability and/or toxicity. In addition, the facility accepts nonhazardous waste streams for solvent recovery or fuel blending, for storage on-site, and/or for storage prior to shipment to another facility for treatment,

fuel blending or incineration. Therefore, the wastes received may exhibit a wide variety of hazardous characteristics. A discussion of the wastes received at HRC is presented in Section 3 of this Part B permit application.

The primary purpose of the receipt analyses is to confirm that the site is receiving the material described on the waste manifest and that the material can be safely handled at the facility. Therefore, a limited set of analyses are used to perform this confirmation analysis. The receipt analysis that will be performed on each waste stream are detailed in section 2.2.4 of this waste analysis plan.

Throughout the waste analysis plan, Clean Harbors proposes to perform a GC scan or volatile organic analysis. The GC scan involves the use of capillary column gas chromatography to identify the primary components of a solvent waste stream. Typically, all components present at 1% or greater are identified in this analysis. Different detectors (e.g., flame ionization detectors, FID) may be used on different wastes, depending upon the nature and anticipated disposition of the waste. When running a GC scan on waste for reclamation (e.g., dry cleaning solvent), the purpose of the scan is to evaluate the presence of reclaimable components. For wastes intended for the fuels program, the GC scan is used to evaluate general composition.

During the initial waste stream profile evaluation, a GC scan is conducted if deemed necessary by Clean Harbors. The scan can identify each component in a waste stream present at 1% or greater concentrations. There are approximately 150 compounds in the chemical database that can be identified by the GC. For any compounds present at 1% or greater concentrations that can not be identified by the GC, a GCMS will be conducted. The GCMS chemical database contains over 100,000 compounds used to identify the unknown compounds.

A number of checks and reviews of a shipment are performed when the shipment is received at the facility. In addition to the paperwork, labels, descriptions and permit checks, a receipt analysis is done. Once samples are obtained from the shipment, they are submitted to the facility laboratory for composite or individual analysis. Information from the hazardous waste manifest accompanies the samples. The laboratory then conducts the appropriate tests to evaluate the shipment samples, as described in Sections 2.2.4 and 2.2.5.

Secondary tests are most frequently used to determine or refine the process settings for greatest recovery efficiency. These analyses are not necessary to establish safe and proper waste handling and management methods. Should the primary tests, however, indicate the need for additional information, the secondary tests identified in this section are most probably the ones that would be expected to provide additional information. Thus, the secondary tests are the ones available for the laboratory to use should they deem it necessary.

Table 6 in the Waste Analysis Plan contains the waste acceptance parameters for each of the waste types that the HRC will receive.

Samples for receipt analyses are obtained using sampling devices such as those listed in Section 2.2.2 and sampling methods as specified in SW-846. For bulk shipments, one

representative sample is obtained and analyzed for each bulk load, or for each compartment of a bulk tanker with multiple compartments. For multi-compartment tankers, samples from those compartments containing the same waste stream will be composited prior to analysis, while samples from compartments containing different waste streams will be analyzed individually.

For drum shipments from sources other than "industry-specific", all drums are sampled. Representative container samples are composited according to waste description (e.g., different containers of 1,1,1-trichloroethane may be composite sampled). A maximum of twenty drums from any single manifest line item is represented in a composite sample analyzed for the primary analyses. If the primary analyses identify a problem, the composite is broken down as described below, until the problem drum(s) can be determined. The waste contained in the drums is not composited into bulk tanks until the results of the primary analysis are received.

In cases where composites of drum samples are made for the purposes of analysis, should the analysis identify non-conforming waste material or a problem in its character and a suspect shipment cannot be identified, a new composite of half of the original drums sampled is made and analyzed (if this composite analysis produces a non-conforming result then this sample group is halved and another composite sample is collected). This composite halving process is done until the problem source is identified. If the analysis identifies a problem with a bulk load, the shipment will be resampled and tested. If the problem is confirmed, the generator will be notified and the load rejected, if appropriate disposal arrangements cannot be made. If the material was delivered in containers and the analyses identify a problem with the contents of the day receipts holding tank, the tank is quarantined until the problem source is identified and/or appropriate disposal arrangements can be made.

Waste Generated by HRC

Regulations that govern safe and effective management of waste, under OAC 3745-52-11, require that a generator must determine if that waste is a hazardous waste. To do this, the generator must first determine if the waste is excluded from regulations under OAC 3745-51-04, Exclusions. The generator must then determine if the waste is listed as a hazardous waste in OAC 3745-51-30 through -33. If the waste is not listed as a hazardous waste in OAC 3745-51-30 through -33, he must determine whether the waste is identified in OAC 3745-51-20 through -24 by either 1) testing the waste, or 2) applying knowledge of the hazardous characteristic of the waste in light of the material or the process he used. If the waste is determined to be hazardous, the generator must determine what requirements there are for the proper and safe management of the specific waste.

The Clean Harbors HRC is a RCRA TSD facility that receives waste from off-site generators. The HRC generates several waste streams that are residuals of the recovery/recycling of clean solvents, liquids and useable products from waste materials. Therefore, the HRC is also a generator of hazardous wastes.

Waste streams generated at HRC include such wastes as:

Still-Bottoms Oils:

The residual liquid (usually oil) or sludge remaining from the distillation or fractionation of a material to recover an overhead product.

Evaporator or Safety-Therm Solids:

The residual solids from the Safety-Therm Evaporator process utilized to recover product solvents from waste solids or sludges.

Miscellaneous Solids:

The solids generated result from various handling steps such as pipeline filters, settling or emptying of drums. These solids are those that cannot be suspended and processed or blended for recovery or recycling.

Other wastes might be generated from the recovery, recycling, or other processing of materials at this facility. It is neither possible nor necessary to predict all possible wastes that might be generated, but rather identify that the facility will comply with OAC 3745-52-11 to determine if the wastes generated by the facility are hazardous and what steps must be taken to manage the wastes in a safe and environmentally sound manner.

Virtually any waste generated on-site at HRC will be amenable to processing through the fuel blending operations. However, based on market conditions, Clean Harbors may choose to send on-site generated wastes for off-site storage, treatment, processing, recovery, or disposal.

When a waste stream is generated, the facility will refer to OAC 3745-51, as specified, to determine if the generated waste is indeed a hazardous waste by being either a listed waste or a characteristic waste and is not otherwise excluded from regulation. Consideration is given to the source of the process that generates the waste. For instance, still-bottoms oil from the distillation and recovery of a listed solvent, such as F001, F002 or F004 is itself, by definition, a hazardous waste with the same code. In another example, the residuals from the processing of a characteristic waste may be tested to determine if the material no longer exhibits that characteristic or in fact, may be handled and managed as that characteristic type of waste.

The facility takes every step possible to maximize the recovery of useable materials and the recycling of wastes in accordance with waste minimization requirements. Indeed, if a residual material from one process step can be processed or otherwise recycled in yet another process step, it will be done. Whenever possible, this is done at HRC. It may be necessary for reasons of capability, capacity, or logistics that further processing or recycling be done at another facility.

Wastes generated by HRC may be managed as accumulated waste for up to 90 days at the facility. If the material is still at the site after 90 days, it will be placed in properly permitted storage area or tank.

Land Disposal Restrictions

In its characterization of the material and determination of proper handling, it is necessary that HRC consider whether or not this material is restricted from land disposal under 40 CFR Part 268/OAC 3745-270. If a waste is determined to be of the type restricted from land disposal, it is necessary to determine if the material meets the appropriate treatment standard. If not, the material must then go for treatment or otherwise dispositioned, not land disposed, as identified in the land disposal restrictions. For instance, the best demonstrated available technology for the processing of non-recoverable, non-recyclable materials that are listed as F001, F002, F003, F004, or F005 wastes, is incineration. The major portion of the materials handled by HRC corresponds to those F-code wastes. Therefore, those materials that do not meet the treatment standards and are non-recyclable, or non-recoverable (i.e., materials that cannot be used as fuels in industrial furnaces or which cannot be processed to yield a reusable solvent product) are sent for incineration.

If a material restricted from land disposal is to be sent to a treatment facility, a notice identifying the material as restricted from land disposal, along with identification of the treatment standard associated with that restriction, and underlying hazardous constituents (UHC's) accompanies the waste shipment to the treatment facility. If a waste restricted from land disposal meets the treatment standard and will be sent to a land disposal unit, a certification that the material meets the treatment standard and that the material can be land disposed will accompany the shipment. For the purposes of land disposal restrictions, an incinerator is considered treatment and therefore, shipments to an incinerator are accompanied by a Notice of Land Disposal Restriction as specified in 40 CFR Part 268/OAC 3745-270.

For shipments of waste off-site, Clean Harbors uses both actual analysis and knowledge of wastes to determine waste status with respect to the land disposal restrictions and underlying hazardous constituents (UHC's). In addition to the routine analyses, Clean Harbors has performed TCLP analyses on composites of waste streams at HRC. In addition, because TCLP detection limits are often above regulatory limits, Clean Harbors has used empirical knowledge of likely contaminants to augment the waste code lists. Re-analysis may be performed if there is any reason to believe the composition of the waste has changed (e.g. if new or different wastes are being processed).

To determine the land disposal status, Clean Harbors will test "characteristic" wastes (D-codes) to determine whether they are still defined as hazardous. Listed wastes (F-, K-, P-, and U-codes) and treatment products of listed wastes will not be land disposed unless they have undergone treatment and meet the treatment standards of 40 CFR 268.42 through 268.43/OAC 3745-270-42 through 43. All hazardous wastes shipped off-site for treatment or disposal will be in accordance with the appropriate treatment standard specified in 40 CFR Part 268/OAC 3745-270.

The paperwork that accompanies the waste shipment into HRC is checked for the appropriate Notice of Land Disposal Restriction. The Notices of Land Disposal Restriction received with shipments to the HRC and copies of notices or certification sent with shipments out of HRC are kept on file at the facility for a period of five years, or as required by 40 CFR 268.7/OAC 3745-270-07.

2.2.4 Receipt Analysis - "Industry-Specific" Source Wastes

This subsection outlines the analysis to which the wastes from industry-specific sources are subjected for receipt control. The receipt control logic is summarized below. Solvents received from industry-specific sources include dry cleaner solvent.

Dry Cleaner Solvent

The dry cleaner solvent recovery provided by HRC consists of a waste processing of dry cleaner still bottoms, filter cartridges, separator water and filter media (from filters used to purify the dry cleaning solvent during usage). From these wastes, HRC recovers high purity perchloroethylene (tetrachloroethylene or perc) via evaporation and fractional distillation. As part of the overall reclamation, Clean Harbors sells recycled perchloroethylene to brokers for distribution to the dry cleaners.

Dry Cleaning type waste received from industrial users will be accepted as industrial and other sources waste only.

Dry cleaning waste is an "industry-specific" source that is well characterized. As stated above, the waste generated by the dry cleaning industry consists of waste solvent, still bottoms, filter cartridges and filter media. Dry cleaning wastes are very consistent over time, and across dry-cleaner customers using the same solvents. Based on HRC's experience recovering dry cleaning solvents, fingerprint analysis of the incoming dry cleaner wastes is unnecessary.

The solid residue, which HRC separates from the solvent, contains metal, paper, activated carbon and oils. The solvent containing waste received from the dry cleaning industry is predominantly perchloroethylene (tetrachloroethylene or perc). The typical volatile organic content is 80% perchloroethylene, 15% mineral spirits, and 5% more volatile solvents. HRC annually receives 40,000,000 pounds of dry cleaner wastes for processing. The data and characterization of this material acquired to date provide adequate knowledge of the material to safely manage it.

HRC confirms the Volatile Organic Analysis characterization of the waste material after distillation. The sample can be collected at the distillation unit or at a tank, depending on process conditions. The dry cleaning distillate overhead intermediate may also be analyzed for specific gravity and pH. The results of these analyses may be used to determine fractionation process

settings. The crude distillate is further refined by fractional distillation to produce high quality solvent.

Since the dry cleaning filter waste streams are typically in a solid matrix (metal and paper filter cartridges), the material can not be easily sampled and analyzed. Furthermore, this waste stream is very consistent since it is coming only from dry cleaning facilities. Therefore, no sampling and analyses are conducted of the material upon receipt. However, during an intermediate recycling process, a sample of the distillate overhead is obtained. The sample is obtained prior to the material being fractionated. The sample is analyzed for volatile organic analysis, specific gravity and pH. The information that is obtained from these analyses is utilized for process settings for the next step of the recycling, which is fractionation. Since the dry cleaning waste stream is so consistent, in the many years of recycling this material there has never been cause to reject any of the dry cleaning wastes.

Although, the dry cleaning waste materials are not sampled and analyzed upon receipt, as each container is opened for processing it is inspected for physical appearance. This consists of inspecting the containers for foreign debris not consistent with the waste stream, e.g., rags, gloves, etc. Typically when foreign materials are found in the containers it is removed for proper disposal and the dry cleaning wastes are processed for recovery. In addition to inspecting the container for foreign debris, facility personnel will also look for unusual color. If any of these conditions are found to be present, the facility may elect to return the material to the generator or sample the material and conduct a volatile organic analysis. The results of the volatile organic analysis will determine if the material is characteristic of dry cleaning waste, and therefore able to be processed. If it is determined that the material is other than typical dry cleaning waste, the facility may return the material to the generator or select a suitable method for disposal. In addition, at least 10% of the containers from each truckload will be opened for a visual inspection upon receipt. These inspections are required to ensure that the drums contain waste that can be accepted at the facility and for manifest verification purposes. The containers from each shipment will not be accepted and placed into storage until the inspections are completed.

Once each month, a composite sample of the dry cleaning still bottoms waste stream is obtained for analysis. The analyses that are conducted include volatile organics analysis, specific gravity, PCBs and pH. This information is not utilized by HRC, but is collected for waste characterization. A review of this information further demonstrates the consistency of the dry cleaning waste streams.

Dry Cleaning Waste

Annually, Clean Harbors will recertify the waste streams associated with the dry cleaning line of business. This recertification will include analysis of samples of Dry Cleaning Perc Bottoms and Dry Cleaning Naphtha Bottoms. To ensure that each type of dry cleaning waste is characterized, 10 samples representing 10 different generators will be taken of each type of dry cleaning waste that is processed at HRC, other than filters which can not be easily sampled.

At the beginning of each calendar year, Clean Harbors will conduct the annual recertification sampling representative of the dry cleaning waste shipped to the facility. The samples will be obtained by HRC. The collected samples will be sent to a Clean Harbors laboratory, or an outside laboratory, for analysis. The samples will be analyzed for VOA, BNA, and Metals constituents (excluding D012 through D017, D020, and D031). The data collected from analysis of the collected samples will be utilized to annually evaluate the recertification of the dry cleaning waste stream.

Facility/Corporate personnel will review the results of the individual recertification analyses to ensure that HRC is permitted to receive the material. Additionally, if any analysis determination cannot be accomplished or proves to be questionable to the specific regulatory detection level for a given parameter, the facility will modify the incoming waste codes to represent the parameter. The analyses will also be utilized to ensure that the material is manifested appropriately. In the event that any of the analyses indicate materials which HRC is not permitted to receive, the generator will be contacted to review their operations to correct the problem. This waste will be rejected either back to the generator or an alternate, approved facility.

Contaminated Soils/Debris

HRC occasionally receives contaminated soils and debris from incidental spills of dry cleaning waste. The contaminated material is placed into containers and shipped to HRC. HRC receives this material and determines the appropriate method of disposal, typically landfilling. Any contaminated soil or debris resulting from a spill of dry cleaning waste will be managed as hazardous waste due to the US EPA's "Contained In Policy." If the material contains recoverable organic solvents, the material will be processed to recover the solvent. If the contaminated soil/debris does not contain recoverable organic solvents, the material will then be shipped off-site to an appropriate treatment or disposal facility.

2.2.5 Receipt Analyses -- "Industrial Source"

Clean Harbors handles the fluid-wastes generated by industrial generators in bulk quantities or in containers. These wastes might fall into such categories as: toll recycling (customer provides the waste and Clean Harbors recovers the waste to their specifications); solvent recycling or recovery (Clean Harbors combines like solvent wastes and recovers these solvents for resale as specification recycled product); wastewaters contaminated with organics (recovered solvents are blended to specification for energy recovery as kiln fuel for the cement industry and the water is treated in the on-site biological wastewater treatment unit), or fuels blending (low value flammable, combustible, and halogenated solvents are blended to specification for energy recovery as kiln fuel for the cement industry). The specific receipt analyses associated with each of these waste management techniques are addressed below.

Toll Recycling

Clean Harbors provides toll recycling for users of organic solvents. In toll recycling, an amount of waste solvent is shipped from the customer to HRC. The specific material is isolated, processed separately, and the reclaimed solvent is shipped back to that customer. For toll recycling work, generally an agreement is reached as to the grade or specifications of the recovered finished product and the fees or charges for the work. Clean Harbors does not take ownership of toll recycling material, but rather, only provides a recycling service.

The material may be shipped in bulk, or in containers. Upon receipt of a shipment, the load is sampled and the sample is submitted to the laboratory for shipment receipt analysis. (Sampling is described in Section 2.2.2.) The samples are analyzed, at a minimum, for the primary tests below, to establish that the waste material received matches the manifest description and the waste stream profile evaluation. Any material that does not match the waste stream profile evaluation will not be immediately accepted. Instead, the material will either be resampled and requalified or will be rejected to the generator or an alternate TSD. The secondary tests may be performed to establish material quality and process settings for most efficient recovery, but these are not necessary to, nor part of, the waste shipment receipt control.

Primary Tests:

Volatile Organic Analysis;
pH;
Physical Appearance; and
PCB Analysis.

Secondary Tests:

% Water;
Specific Gravity; and
Distillation Performance.

The recovered material is then returned to the customer in accordance with any agreement for processing.

Solvent Recycling or Recovery

Clean Harbors provides solvent recycling services to industrial generators of waste organic fluids, whereby HRC processes the wastes to meet pre-determined manufacturing specifications, and in turn sells the recovered product in the general industrial market. The material may be shipped in bulk or in drums.

Upon receipt of a shipment, the load is sampled. If received in bulk, the sample is submitted directly to the laboratory for shipment receipt analysis. If received in containers, each drum is sampled. A composite of a maximum of twenty drums is made for each type of waste by generator for each manifest line item, and submitted to the laboratory for shipment receipt

analysis. The sample is analyzed at a minimum for the primary tests below, to establish that the waste material received matches the manifest description and the waste stream profile evaluation. Any material that does not match the waste stream profile evaluation will not be immediately accepted. Instead, the material will either be resampled and requalified or will be rejected to the generator or an alternate TSD. Other tests, such as the secondary tests below, may be performed to establish material quality and process settings for most efficient recovery, but these are not necessary to, nor part of, the waste shipment acceptance requirements.

Primary Tests:

Volatile Organic Analysis;
pH;
Physical Appearance; and
PCB Analysis.

Secondary Tests:

% Water;
Specific Gravity; and
Distillation Test.

The recovered finished product is sold either in drums or bulk.

Wastewater

Clean Harbors provides solvent separation services to industrial generators of wastewaters contaminated with organic fluids, whereby the waste material is processed at HRC to remove the organic contaminates and then processes the water in the on-site biological wastewater treatment unit. The material may be shipped in bulk or in drums.

Upon receipt of a shipment, the load is sampled. If received in bulk, the sample is submitted directly to the laboratory for shipment receipt analysis. If received in containers, each drum is sampled. A composite of a maximum of twenty drums is made for each type of waste by generator for each manifest line item, and submitted to the laboratory for shipment receipt analysis. The sample is analyzed at a minimum for the primary tests below, to establish that the waste material received matches the manifest description and the waste stream profile evaluation. Any material that does not match the waste stream profile evaluation will not be immediately accepted. Instead, the material will either be resampled and requalified or will be rejected to the generator or an alternate TSD. Other tests, such as the secondary tests below, may be performed to establish material quality and process settings for most efficient recovery, but these are not necessary to, nor part of, the waste shipment acceptance requirements.

Primary Tests:

Flashpoint (Ignitability);
Volatile Organic Analysis;

pH; and
PCB Analysis

Secondary Tests:

Physical Appearance; and
Specific Gravity

Fuels Blending

Many wastes are not economical or cannot be physically recycled into products for reuse. These materials are suitable for Clean Harbors' fuels blending program, where the energy contained in the waste is recovered by burning as industrial furnace or boiler fuel.

Fuel blending is conducted in Tanks 97 and 98. Self generated distillation (still) bottoms from the facility processes are blended with off-site generated customer waste.

The waste material may be shipped in bulk, or in drums. Upon receipt of a shipment, the load is sampled. If received in bulk, the sample is submitted directly to the laboratory for shipment receipt analysis. If received in drums, each drum is sampled. A composite of a maximum of twenty drums is made from any single manifest line item, based on EPA hazard code and submitted to the laboratory for shipment receipt analysis. The sample is analyzed at a minimum for the primary tests below to establish that the waste material received matches the manifest description. The secondary tests may be performed to establish material quality and process settings for most efficient recovery, but these are not necessary to, nor part of, the waste shipment acceptance requirements.

Primary Tests:

Flashpoint (Ignitability);
Volatile Organic Analysis;
pH;
PCB Analysis;
Compatibility and Reactivity

Secondary Tests:

BTU;
Chloride;
Ash;
% Water; and
Metals

The shipment receipt analysis is necessary to establish that the material received matches the expected material. Since the waste material will be blended with other materials, tests to establish specific parameter levels (e.g., ash, chloride, metals) are not part of the shipment receipt analysis, but may be conducted to assist in blending. The blended fuel is shipped off-site for additional blending and/or burning for energy recovery. Any material that is unsuitable for fuel

blending or solvent recovery will be shipped to an off-site facility for appropriate treatment and/or disposal.

3.0 QUALITY ASSURANCE/QUALITY CONTROL PROGRAM

Clean Harbors uses standard quality control procedures as part of the overall Quality Assurance Program. These quality control procedures specify that QC checks must be conducted to verify that all analyses are accurate and precise. Each Clean Harbors facility laboratory has a Quality Assurance Manual, tailored to the analyses done at the laboratory. Each Clean Harbors analytical procedure uses the following QC checks, where applicable.

1. Calibration and Reagent Standardization

   Each time an instrument is calibrated or a reagent is standardized, such is recorded. The analytical methods specify the procedure and frequency required to maintain accuracy.

2. Control Samples

   If a method is not calibrated at an equivalent frequency, a known standard is analyzed on a frequent basis. Calibration or analysis of a known standard is done either daily or weekly, depending upon the specific requirements of the analytical method. Calibration or analysis of a known standard is done at least once for every twenty samples run, even if that is more frequent than weekly or daily.

3. Blanks

   Where applicable, method and reagent blanks will be run for each matrix, batch or per day depending on the method and the results are recorded in the laboratory log.

4. Duplicates

   A duplicate sample is run after the analysis of ten (10) or twenty (20) samples, depending upon the method, and the results recorded in the laboratory log.

5. Spiked Samples

   Where applicable, samples are spiked with the analyte and analyzed. Spikes are conducted after ten (l0) or twenty (20) samples, depending upon the method.

6. Reference Samples

   Where available, reference standards are analyzed by each laboratory at least annually. These standards are prepared by an outside laboratory and the concentrations are unknown until final results are submitted.

7. Laboratory Quality Assurance Manual included as Attachment 5.

SECTION 4.0

TABLES AND ATTACHMENTS

Table 1

Prequalification and Conformance Testing Parameters

Parameter	Purpose	Exceptions To Requirements For Parameter Analyses
Physical Description	Determines the general characteristics of the waste including color, odor, viscosity, layering, free liquids, and other observable characteristics.	None
PCBs	Determines the concentration of Polychlorinated Biphenyls in aqueous liquids, non-aqueous liquids, and solids.	None
Radioactivity	Determines if waste has regulated levels of isotopes above background levels.	None
Specific Gravity	Indicates density of the waste to determine suitability for solvent recovery.	Except solids and high viscosity samples
pH	Indicates the corrosive nature of the waste.	Aqueous phase only in multiphase materials Water extraction for non-aqueous materials
Ignitability	Determines whether the waste is RCRA ignitable or is DOT flammable or combustible.	Need not applied if other information indicates the waste is not ignitable.

Table 2
Supplemental Testing Parameters

Parameter	Purpose
Percent Acidity	Determines the acidity in the waste by species. It is only used if the waste is aqueous and has a pH of less than 7.
Percent Alkalinity	Determines the amount of alkalinity in the waste by species. It is only used if the waste is aqueous and has a pH above 7.
pH Spectrum	Determines the phase behavior of the waste over a wide pH change, and is particularly applicable to deep well disposal.
GC/MS Scan	Used to separate and identify organic compounds.
Specific Gravity	Indicates density of the waste to determine suitability for solvent recovery.
Heat Phase Separation	Determines phase behavior with respect to temperature fluctuation, and is applicable to deep well disposal.
GC Scan	Used to separate and identify organic compounds.
Liquid Waste Compatibility	Determines whether liquid wastes are stored or processed together are compatible.
Paint Filter Test	Indicates if free liquid is present in a solid or semi-solid material.
Active Test	Determines the percent of active solvents in a blend.
Water Acceptance	Determines the percent of water-soluble solvents.
Toxicity Characteristic	Uses the Toxicity Characteristic Leaching Procedure (TCLP) to determine the presence of organic chemicals described by EPA Waste Codes D004 through D043.
Heavy Metals (As, Ba, Cd, Cr, Pb, Hg, Se, Ag)	To quantify heavy metals concentration to determine process operating parameters.
Miscellaneous Metals (Cu, Fe, Ca, Mg, Mn, Ni, Zn)	To determine potential salt precipitation and for monitoring certain processes.
Sulfates	To determine if the major acid component sulfuric acid or its salts.
Phosphates	To determine if the major acid component is phosphoric acid or its salts.
Chlorides	To determine if the major acid component is hydrochloric acid or its salts.
Nitrates	To determine if the major acid component is nitric acid or its salts.
Free Cyanides	To measure the cyanides that would be potentially reactive under acid conditions.
Total Cyanides	To quantify the concentration of all free and complexed cyanides.
Total Sulfides	To quantify the concentration of total sulfide.

Table 2
Supplemental Testing Parameters

Oil and Grease	To quantify the amount of oil and grease so as not to impact certain processes.
Phenols	To quantify the concentration of phenols.
Total Residue	To quantify the suspended and dissolved solids present and moisture content for selected processes.
Filterable Residue	To quantify the suspended solids present to determine filtration requirements in process operations.
Non-Filterable Residue	To quantify the dissolved solids present to determine acceptability for certain processes.
Specific Organic Compounds	To determine the concentrations of specific organics.
Flash Point	To further characterize ignitable wastes to establish proper storage mode and conformance with permit conditions. A closed cup is used for liquids, and an open cup for solids.
Viscosity	To determine the pumpability of a waste.
Elemental Analyses (including Cl)	To determine the potential for HCl generation during incineration.
Water Content	To determine the amount of free water or indicate the combustibility of the waste.
Heat Value	To assess the amount of heat available for release during thermal combustion (incineration or use as fuel supplement).
Percent Ash	To estimate particulate generation, and inorganic solid residue for incineration system control.
Priority Pollutant Scan	To identify the presence of EPA priority pollutants (i.e., volatile organics, acid extracts, and base/neutral extracts).
Boiling Range	To determine separation possibilities of liquid wastes.

Table 3
Test Methods

Waste Category	EPA Hazardous Waste No.	Parameter	Analytical Method(s)
Ignitability	D001	Flash Point	1010[(a)]; 1020[(a)]; D-3278-78[(i)]
Corrosive	D002	pH	9040[(a)]; 9045[(a)]; 423[(b)]; 150.1[(c)]; 402[(b)]; 403[(b)]; D-5058[(e)]
Reactive	D003	Cyanide	9010[(a)]; 412A[(b)]; 412B[(b)]; 412C[(b)]; 412D[(b)]; 412E[(b)]; 335.2[(c)]; 335.3[(c)]
	D003	Sulfide	9030[(a)]; 427B[(b)]; 427C[(b)]; 427D[(b)]; 4500-S^2-D[(j)]; 376.1[(c)]; 376.2[(c)]
Inorganic Metals	D004	Arsenic	7061[(a)]; 6010[(a)]; 303E[(b)]; 305[(b)]; 307A[(b)]; 200.7[(c)]; 206.2[(c)]; 206.3[(c)]; 206.4[(c)]
	D005	Barium	6010[(a)]; 303C[(b)]; 305[(b)]; 200.7[(c)]; 208.1[(c)]
	D006	Cadmium	6010[(a)]; 303A[(b)]; 303B[(b)]; 305[(b)]; 200.7[(c)]; 213.1[(c)]
	D007	Chromium	6010[(a)]; 303A[(b)]; 303B[(b)]; 305[(b)]; 200.7[(c)]; 218.1[(c)]
	D008	Lead	6010[(a)]; 303A[(b)]; 303B[(b)]; 305[(b)]; 200.7[(c)]; 239.1[(c)]
	D009	Mercury	6010[(a)]; 7470[(a)]; 303F[(b)]; 245.1[(c)]; 245.2[(c)]; 245.5[(c)]
	D010	Selenium	7741[(a)]; 6010[(a)]; 303E[(b)]; 305[(b)]; 200.7[(c)]; 270.2[(c)]; 270.3[(c)]
	D011	Silver	6010[(a)]; 303A[(b)]; 303B[(b)]; 305[(b)]; 200.7[(c)]; 272.1[(c)]
Organics	D018	Benzene	8260[(a)]; 8021[(a)]
	D019	Carbon Tetrachloride	8260[(a)]; 8021[(a)]
	D020	Chlordane	8270[(a)]
	D021	Chlorobenzene	8021[(a)]; 8260[(a)]
	D022	Chloroform	8260[(a)]; 8021[(a)]
	D023	o-Cresol	8270[(a)]; 8410[(a)]
	D024	m-Cresol	8270[(a)]; 8410[(a)]
	D025	p-Cresol	8270[(a)]; 8410[(a)]
	D026	Cresol	8270[(a)]; 8410[(a)]
	D027	1,4-Dichlorobenzene	8021[(a)]; 8260[(a)]
	D028	1,2-Dichloroethane	8021[(a)]; 8260[(a)]
	D029	1,1-Dichloroethylene	8021[(a)]; 8260[(a)]
	D030	2,4-Dinitro-toluene	8270[(a)]; 8410[(a)]

Table 3
Test Methods

Waste Category	EPA Hazardous Waste No.	Parameter	Analytical Method(s)
Organics	D031	Heptachlor (and its epoxides)	8270[a]
	D032	Hexachlorobenzene	8270[a]; 8410[a]
	D033	Hexachlorobutadiene	8021[a]; 8260[a]; 8270[a]; 8410[a]
	D034	Hexachloroethane	8270[a]; 8410[a]
	D035	Methyl Ethyl Ketone	8015[a]; 8260[a]
	D036	Nitrobenzene	8270[a]; 8410[a]
	D037	Pentachlorophenol	8270[a]; 8410[a]
	D038	Pyridine	8260[a]
	D039	Tetrachloroethylene	8021[a]; 8260[a]
	D040	Trichloroethylene	8021[a]; 8260[a]
	D041	2,4,5-Trichlorophenol	8270[a]; 8410[a]
	D042	2,4,6-Trichlorophenol	8270[a]; 8410[a]
	D043	Vinyl Chloride	8021[a]; 8260[a]
All Aqueous Waste		PCB's	8082[a]; 8270[a]; D6160-98(2003)[d]
		pH	9040[a]; 9045[a]; 423[b]; 150.1[c]
		Neutralization Equivalent	402[b]; 403[b]
		Miscibility	No standard method
	D004	Arsenic	7061[a]; 6010[a]; 303E[b]; 305[b]; 307A[b]; 200.7[c]; 206.2[c]; 206.3[c]; 206.4[c]
	D005	Barium	6010[a]; 303C[b]; 305[b]; 200.7[c]; 208.1[c]
	D006; F006	Cadmium	6010[a]; 303A[b]; 303B[b]; 305[b]; 200.7[c]; 213.1[c]
	D007; F006; K048; K050; K051; K086	Chromium (Total)	6010[a]; 303A[b]; 303B[b]; 305[b]; 200.7[c]; 218.1[c]
	D007; F006; K048; K050; K051; K086	Chromium (Hexavalent)	7196[a]; 312B[b]; 218.3[c]; 218.4[c]; 218.5[c]; 1-1230-85[f]
	D008; K048; K049; K051; K052; K086	Lead	6010[a]; 303A[b]; 303B[b]; 305[b]; 200.7[c]; 239.1[c]
	D009	Mercury	6010[a];7470[a]; 303F[b]; 245.1[c]; 245.2[c]; 245.5[c]

Table 3
Test Methods

Waste Category	EPA Hazardous Waste No.	Parameter	Analytical Method(s)
All Aqueous Waste	D010	Selenium	7741[a]; 6010[a]; 303E[b]; 305[b]; 200.7[c]; 270.2[c]; 270.3[c]
	D011	Silver	6010[a]; 303A[b]; 303B[b]; 305[b]; 200.7[c]; 272.1[c]
	F006	Nickel	6010[a]; 303A[b]; 303B[b]; 305[b]; 321A[b]; 200.7[c]; 249.1[c]
	F001; F002; All "U" Wastes	Volatile Organic Compounds	8015[a]; 8021[a];8260[a]
	F004; U165; U169; U196; U213	Various BNA Compounds (Phenols; Phthalate Esters; Cyclic Ketones; Nitro-Aromatics; Polynuclear Aromatic Hydrocarbons; and Chlorinated Hydrocarbons	8021[a]; 8100[a]; 8260[a]
		Ammonia	417[b]; 417B[b]; 417C[b]; 417D[b]; 4500-NH_3[j]; 350.1[c]; 350.2[c]; 350.3[c]
		Copper	6010[a]; 303A[b]; 303B[b]; 305[b]; 313A[b]; 200.7[c]; 220.1[c]
		Phenol	510A[b]; 510B[b]; 8270[a]; 420.1[c]; 420.2[c]; 420.3[c]
		Fluorides	413A[b]; 413B[b]; 413C[b]; 340.1[c]
		Settleable Solids	209E[b]; 160.5[c]
		Specific Gravity	213E[b]; D891-95[d]; D1298-99(2005)[d]; D5057-90(2006)[d]
		Sulfides - Total	9030[a]; 427D[b]; 376.1[c]; 376.2[c]
		COD	508A[b]; 410.1[c]; 410.2[c]; 410.4[c]; 8000[g]
		Suspended Solids	209C[b]; 160.1[c]
		Oil and Grease	503B[b];503C[b]; 503A[b]; 503E[b]; 413.2[c]; 1664[h]
All Appropriate Wastes		Flash Point	1010[a]; 1020[a]; D3278-78 [d]

Table 3
Test Methods

Waste Category	EPA Hazardous Waste No.	Parameter	Analytical Method(s)
All Mixed/ Consolidated Wastes		Compatibility	ASTM D5058 Method A[(e)]

a – "Test Methods for Evaluating Solid Waste: Physical/Chemical Methods", U.S. Environmental protection Agency, Office of Solid Waste and Emergency Response
Note – most current approved methods will be utilized from SW-846.

b – "Standard Methods for Examination of Water and Wastewater", 16th Edition, American Public Health Association, American Waterworks Association, Water Pollution Control Federation
c – "Methods for the Chemical Analysis of Water and Wastes" Publication EPA-600/4-79-020, U.S. Environmental Protection Agency, Environmental Monitoring and Support Laboratory.
d – "Analysis of Petroleum Products and Lubricants"; Annual Book of ASTM Standards, American Society for Testing and Materials.
e – "Standard Test Methods for Compatibility of Screening Analysis of Waste", ASTM Designation D5058-90, American Society for Testing and Materials.
f – "Methods for Analysis of Inorganic Substances in Water and Fluvial Sediments", U.S. Department of the Interior, U.S. Geological Survey, Open-File Report 85-495.
g – Hach Method 8000, Federal Register, April 21, 1980, 45(78), 26811-26812.
h – "Method 1664, Revision A", Publication EPA-821-R-00-003, American Society for Testing and Materials.
i – "Test Methods for Flash Point of Liquids by Setaflash Closed Cup Tester", ASTM Standard D3278-78, American Society for Testing and Materials.
j - "Standard Methods for Examination of Water and Wastewater", 20th Edition, American Public Health Association, American Waterworks Association, Water Pollution Control Federation.

Table 4
Sampling Methods
(as per SW-846)

Type of Vessel	Sampling Device/Method
Drum or Container (Liquid)	Composite Drum Sample (Coliwasa Sampler)
Drum or Container (Solid, sludge)	Scoop Sampler
Tanker (Liquid)	Composite (Coliwasa Sampler)
Tank (Liquid)	Coliwasa Sampler or composite from top, bottom or side valve
Roll Off Box (Solid, Sludge)	Scoop Sampler

Table 5 Frequency of Instrument Inspection	
Instrument	**Inspection Frequency**
GC	Check Standard Every Day
Karl Fisher	Restandardized Every New Batch of Titrant
pH Meter	Standardized Every Day w/Buffer
Balances/Scales	Checked Every Day W/Class 1 Weights

Table 6
Waste Acceptance Parameters

WASTE STREAM	ANALYSIS	ACCEPTANCE PARAMETERS
Perchloroethylene Dry Cleaner Solvent (includes filters, still bottoms)	Physical Appearance	
	Color	clear, brown or black
	Foreign Debris	none present
Dry Cleaner Separator Water	Physical Appearance	
	Color	clear, tan or milky
	Foreign Debris	none present
Naphtha Dry Cleaner Solvent	same as Perchloroethylene Dry Cleaning Solvent	
Contaminated Soils/Debris	VOC	>.5% will be recycled <.5% disposed off-site
Toll Recycling	PCB	<50 ppm
	pH;	See Section 2.2.5
	VOC	See Section 2.2.5
	Physical Appearance	See Section 2.2.5
Solvent Recycling	PCB	<50 ppm
	pH	See Section 2.2.5
	VOC	See Section 2.2.5
	Physical Appearance	See Section 2.2.5
Fuel Blending, Wastewater (all except for BTU and Compatibility)	pH	>2 and <12.5
	PCB	<50 ppm
	VOC	See Section 2.2.5
	Flash Point	See Section 2.2.5
	BTU (heat content)	>5000 BTU/Pound
	Compatibility and Reactivity	No Reaction W/Water & Compatible W/Tank Contents

ATTACHMENT 1

MATERIAL PROFILE FORM

WASTE MATERIAL PROFILE SHEET

Clean Harbors Profile No.

. GENERAL INFORMATION

GENERATOR EPA-ID:

GENERATOR PROFILE No.

GENERATOR CODE (Assigned by Clean Harbors)

GENERATOR NAME:

ADDRESS

CITY STATE ZIP/POSTAL CODE

PHONE:

CUSTOMER CODE (Assigned by Clean Harbors)

CUSTOMER NAME:

ADDRESS

CITY STATE/PROVINCE ZIP/POSTAL CODE

B. WASTE DESCRIPTION

WASTE DESCRIPTION:

PROCESS GENERATING WASTE (Please provide detailed description of process generating waste):

C. PHYSICAL PROPERTIES (at 25C or 77F)

PHYSICAL STATE
- SOLID WITHOUT FREE LIQUID
- POWDER
- MONOLITHIC SOLID
- LIQUID WITH NO SOLIDS
- LIQUID/SOLID MIXTURE
  - % FREE LIQUID
  - % SETTLED SOLID
  - % TOTAL SUSPENDED SOLID
- SLUDGE
- GAS/AEROSOL

NUMBER OF PHASES/LAYERS

1 2 3

% BY VOLUME (Approx.)

TOP

MIDDLE

BOTTOM

VISCOSITY (If liquid present)
- 1 - 100 (e.g. WATER)
- 101 - 500 (e.g. MOTOR OIL)
- 501 - 10,000 (e.g. MOLASSES)
- > 10,000

COLOR

ODOR
- NONE
- MILD
- STRONG

Describe:

BOILING POINT °F (°C)
- <= 95 (<=35)
- 95 - 100 (35-38)
- 101 - 129 (38-54)
- >= 130 (>54)

MELTING POINT °F (°C)
- < 140 (<60)
- 140-200 (60-93)
- > 200 (>93)

TOTAL ORGANIC CARBON
- <= 1%
- 1-9%
- >= 10%

FLASH POINT °F (°C)
- < 73 (<23)
- 73 - 100 (23-38)
- 101 -140 (38-60)
- 141 -200 (60-93)
- > 200 (>93)

Actual:

pH
- <= 2
- 2.1 - 6.9
- 7 (Neutral)
- 7.1 - 12.4
- >= 12.5

Actual:

SPECIFIC GRAVITY
- < 0.8 (e.g. Gasoline)
- 0.8-1.0 (e.g. Ethanol)
- 1.0 (e.g. Water)
- 1.0-1.2 (e.g. Antifreeze
- > 1.2 (e.g. Methylene Chloride)

ASH
- < 0.1
- 0.1 - 1.0
- 1.1 - 5.0
- 5.1 - 20.0
- > 20
- Unknown

Actual:

BTU/LB (MJ/kg)
- < 2,000 (<4.6)
- 2,000-5,000 (4.6-11.6)
- 5,000-10,000 (11.6-23.2)
- > 10,000 (>23.2)

Actual:

VAPOR PRESSURE (for liquids only) mm Hg

D. COMPOSITION (List the complete composition of the waste, include any inert components and /or debris. Ranges for individual components are acceptable. If a trade name is used, please supply an MSDS. Please do not use abbreviations.)

CHEMICAL	MIN -- MAX	UOM	CHEMICAL	MIN -- MAX	UOM

ANY METAL OBJECTs PRESENT? YES NO

If yes include dimension:

Clean Harbors Profile No.

E. CONSTITUENTS -- Are these values based on testing or knowledge? ☐ Knowledge ☐ Testing

If constituent concentrations are base on analytical testing, analysis must be provided. If based on knowledge, basis of knowledge must be provided below.

RCRA	REGULATED METALS	REGULATORY LEVEL (mg/l)	TCLP mg/l	TOTAL ppm
D004	ARSENIC	5.0		
D005	BARIUM	100.0		
D006	CADMIUM	1.0		
D007	CHROMIUM	5.0		
D008	LEAD	5.0		
D009	MERCURY	0.2		
D010	SELENIUM	1.0		
D011	SILVER	5.0		

RCRA	VOLATILE COMPOUNDS	REGULATORY LEVEL (mg/l)	TCLP mg/l	TOTAL ppm
D018	BENZENE	0.5		
D019	CARBON TETRACHLORIDE	0.5		
D021	CHLOROBENZENE	100.0		
D022	CHLOROFORM	6.0		
D028	1,2-DICHLOROETHANE	0.5		
D029	1,1-DICHLOROETHYLENE	0.7		
D035	METHYL ETHYL KETONE	200.0		
D039	TETRACHLOROETHYLENE	0.7		
D040	TRICHLOROETHYLENE	0.5		
D043	VINYL CHLORIDE	0.2		

RCRA	SEMI-VOLATILE COMPOUND	REGULATORY LEVEL (mg/l)	TCLP mg/l	TOTAL ppm
D023	o-CRESOL	200.0		
D024	m-CRESOL	200.0		
D025	p-CRESOL	200.0		
D026	CRESOL (TOTAL)	200.0		
D027	1,4-DICHLOROBENZENE	7.5		
D030	2,4-DINITROTOLUENE	0.13		
D032	HEXACHLOROBENZENE	0.13		
D033	HEXACHLOROBUTADIENE	0.5		
D034	HEXACHLOROETHANE	3.0		
D036	NITROBENZENE	2.0		
D037	PENTACHLOROPHENOL	100.0		
D038	PYRIDINE	5.0		
D041	2,4,5-TRICHLOROPHENOL	400.0		
D042	2,4,6-TRICHLOROPHENOL	2.0		

RCRA	PESTICIDES AND HERBICIDES	REGULATORY LEVEL (mg/l)	TCLP mg/l	TOTAL ppm
D012	ENDRIN	0.02		
D013	LINDANE	0.4		
D014	METHOXYCHLOR	10.0		
D015	TOXAPHENE	0.5		
D016	2,4-D	10.0		
D017	2,4,5-TP (SILVEX)	1.0		
D020	CHLORDANE	0.03		
D031	HEPTACHLOR (AND ITS EPOXIDE)	0.008		

OTHER METALS	MIN	MAX	UOM
ALUMINUM			
ANTIMONY			
BERYLLIUM			
CALCIUM			
COPPER			
MAGNESIUM			
MOLYBDENUM			
NICKEL			
POTASSIUM			
SILICON			
SODIUM			
THALLIUM			
TIN			
VANADIUM			
ZINC			

NON-METALS	MIN	MAX	UOM
BROMINE			
CHLORINE			
FLUORINE			
IODINE			
SULFUR			

OTHER NON-METALS	MIN	MAX	UOM
AMMONIA			
REACTIVE SULFIDE			
CYANIDE-TOTAL			
CYANIDE AMENABLE			
CYANIDE REACTIVE			

OTHER CHEMICALS	MIN	MAX	UOM
PHENOL			
Total Petroleum Hydrocarbons			

OTHER

HOCs

NONE
< 1000 PPM
>= 1000 PPM

PCBs

NONE
<50 PPM
>= 50 PPM

IF PCBS ARE PRESENT, IS THE WASTE REGULATED BY TSCA 40 CFR 761?

YES NO

ADDITIONAL HAZARD

DOES THIS WASTE HAVE ANY UNDISCLOSED HAZARDS OR PRIOR INCIDENTS ASSOCIATED WITH IT, WHICH COULD AFFECT THE WAY IT SHOULD BE HANDLED?

YES NO (If yes, explain)

ASBESTOS
DEA REGULATED SUBSTANCES
DIOXIN
EXPLOSIVE
HERBICIDE
FUMING / SMOKING WASTE

INFECTIOUS, PATHOGENIC, OR ETIOLOGICAL AGENT
OXIDIZER
OSHA REGULATED CARCINOGENS
PESTICIDE
POLYMERIZABLE
RADIOACTIVE

REDUCING AGENT
SHOCK SENSITIVE
SPONTANEOUSLY IGNITES WITH AIR
THERMALLY SENSITIVE
WATER REACTIVE

NONE OF THE ABOVE

Clean Harbors Profile No.

F. REGULATORY STATUS

YES NO USEPA HAZARDOUS WASTE?

YES NO DO ANY STATE WASTE CODES APPLY?

YES NO IS THIS WASTE PROHIBITED FROM LAND DISPOSAL WITHOUT FURTHER TREATMENT PER 40 CFR PART 268?
LDR CATEGORY:
VARIANCE INFO:

YES NO IS THIS A UNIVERSAL WASTE?

YES NO IS THIS A WASTEWATER PER 40 CFR PART 268.2?

YES NO IF ANY WASTE CODES D001, D002, D003 (OTHER THAN REACTIVE CYANIDE OR REACTIVE SULFIDE), D004-D0011, D012-DO17 NON-WASTEWATERS, OR D018- D043 APPLY, ARE ANY UNDERLYING HAZARDOUS (UHCs) PRESENT ABOVE UNIVERSAL TREATMENT STANDARDS (UTS)?

YES NO DOES TREATMENT OF THIS WASTE GENERATE A F006 OR F019 SLUDGE?

YES NO IS THIS WASTE SUBJECT TO CATEGORICAL PRETREATMENT DISCHARGE STANDARDS?
IF YES, SPECIFY POINT SOURCE CATEGORY LISTED IN 40 CFR PART 401.

YES NO IS THIS WASTE REGULATED UNDER THE BENZENE NESHAP RULES?
IF YES, IS THE GENERATOR'S TOTAL ANNUAL BENZENE >= 10 Megagrams? YES NO

YES NO DOES THIS WASTE CONTAIN VOC'S IN CONCENTRATIONS >=500 PPM?

YES NO DOES THE WASTE CONTAIN GREATER THAN 20% OF ORGANIC CONSTITUENTS WITH A VAPOR PRESSURE >= .3KPA (.044 PSIA)?

YES NO DOES THIS WASTE CONTAIN AN ORGANIC CONSTITUENT WHICH IN ITS PURE FORM HAS A VAPOR PRESSURE GREATER THAN 77 KPa (11.2PSIA)?

YES NO IS THIS CERCLA REGULATED (SUPERFUND) WASTE ?

YES NO IS THIS WASTE REGULATED UNDER THE OZONE DEPLETING SUBSTANCE ACT FOR ONTARIO?

G. D.O.T INFORMATION: (Include proper shipping name, hazard class and ID number).
US D.O.T. DESCRIPTION:

H. TRANSPORTATION REQUIREMENTS
ESTIMATED SHIPMENT FREQUENCY: ONE TIME WEEKLY MONTHLY QUARTERLY YEARLY OTHER

IF BULK LIQUID OR BULK SOLID PLEASE INDICATE THE EXPECTED NUMBER OF LOADS PER SHIPPING FREQUENCY:

CONTAINERIZED
CONTAINERS/SHIPMENT
STORAGE CAPACITY:
CONTAINER TYPE:
CUBIC YARD BOX
PALLET
TOTE TANK
OTHER:
DRUM SIZE:
CONTAINER MATERIAL:
STEEL
FIBER
PLASTIC
OTHER

BULK LIQUID
GALLONS/SHIPMENT: GAL.
FROM TANKS: TANK SIZE GAL.
FROM DRUMS
VEHICLE TYPE:
VAC TRUCK
TANK TRUCK
RAILROAD TANK CAR
CHECK COMPATIBLE STORAGE MATERIALS.
STEEL | STAINLESS STEEL
RUBBER LINED | FIBERGLASS LINED
DERAKANE
OTHER

BULK SOLID
SHIPMENT UOM: TON YARD
PER SHIPMENT: MIN MAX
STORAGE CAPACITY TON/YD
VEHICLE TYPE:
DUMP TRAILER
ROLL OFF BOX
INTERMODAL ROLLOFF BOX
CUSCO/VACTOR
OTHER

I. SPECIAL REQUEST
SPECIFIC DISPOSAL RESTRICTIONS OR REQUESTS:
SPECIAL WASTE HANDLING REQUIREMENTS:
OTHER COMMENTS OR REQUESTS:

J. BIENNIAL / ANNUAL REPORTING INFORMATION

SIC CODE	SOURCE CODE	FORM CODE

K. SAMPLE STATUS
REPRESENTATIVE SAMPLE HAS BEEN SUPPLIED. YES NO

SAMPLED BY	DATE SAMPLED	WHERE SENT

GENERATORS CERTIFICATION

I hereby certify that all information submitted in this and attached documents is correct to the best of my knowledge. I also certify that any samples submitted are representative of the actual waste. If Clean Harbors discovers a discrepancy during the approval process, Generator grants Clean Harbors the authority to amend the profile, as Clean Harbors deems necessary, to reflect the discrepancy.

AUTHORIZED SIGNATURE	NAME (PRINT)	TITLE	DATE

Attachment 2
Sample Waste Stream Profile Report

WASTE MATERIAL PROFILE SHEET

Clean Harbors Profile No. 306372

GENERAL INFORMATION

ENERATOR EPA ID #/REGISTRATION # ***AZCESQG02461*** GENERATOR NAME: ***Hanson Aggregates #35***

ENERATOR CODE (Assigned by Clean Harbors) ***HA2114*** CITY ***Phoenix*** STATE/PROVINCE ***AZ*** ZIP/POSTAL CODE ***85043***

ADDRESS ***4002 South 51st Avenue*** PHONE:

CUSTOMER CODE (Assigned by Clean Harbors) ***SA2769*** CUSTOMER NAME: ***Safety-Kleen***

ADDRESS ***6625 West Frye Road*** CITY ***Chandler*** STATE/PROVINCE ***AZ*** ZIP/POSTAL CODE ***85226***

B. WASTE DESCRIPTION

WASTE DESCRIPTION: ***MOTOR OIL W/BRAKE CLEANER***

PROCESS GENERATING WASTE (Please provide detailed description of process generating waste):

OFF SPEC

C. PHYSICAL PROPERTIES (at 25C or 77F)

PHYSICAL STATE	NUMBER OF PHASES/LAYERS	VISCOSITY (If liquid present)	COLOR
SOLID WITHOUT FREE LIQUID POWDER MONOLITHIC SOLID ☑ LIQUID WITH NO SOLIDS LIQUID/SOLID MIXTURE % FREE LIQUID % SETTLED SOLID % TOTAL SUSPENDED SOLID SLUDGE GAS/AEROSOL	☑ 1 2 3 % BY VOLUME (Approx.) TOP ***0.00*** MIDDLE ***0.00*** BOTTOM ***0.00***	1 - 100 (e.g. WATER) 101 - 500 (e.g. MOTOR OIL) 501 - 10,000 (e.g. MOLASSES) > 10,000	

ODOR	BOILING POINT °F (°C)	MELTING POINT °F (°C)	TOTAL ORGANIC CARBON
NONE MILD STRONG Describe:	<= 95 (<=35) 95 - 100 (35-38) 101 - 129 (38-54) >= 130 (>54)	< 140 (<60) 140-200 (60-93) > 200 (>93)	<= 1% 1-9% >= 10%

FLASH POINT °F (°C)	pH	SPECIFIC GRAVITY	ASH	BTU/LB (MJ/kg)
< 73 (<23) 73 - 100 (23-38) 101 -140 (38-60) 141 -200 (60-93) ☐ > 200 (>93) ctual:	<= 2 2.1 - 6.9 ☑ 7 (Neutral) 7.1 - 12.4 >= 12.5 Actual:	☑ < 0.8 (e.g. Gasoline) 0.8-1.0 (e.g. Ethanol) 1.0 (e.g. Water) 1.0-1.2 (e.g. Antifreeze) > 1.2 (e.g. Methylene Chloride)	< 0.1 0.1 - 1.0 1.1 - 5.0 5.1 - 20.0 > 20 Unknown Actual:	< 2,000 (<4.6) 2,000-5,000 (4.6-11.6) 5,000-10,000 (11.6-23.2) ☑ > 10,000 (>23.2) Actual:

VAPOR PRESSURE (for liquids only) mm Hg

D. COMPOSITION (List the complete composition of the waste, include any inert components and /or debris. Ranges for individual components are acceptable. If a trade name is used, please supply an MSDS. Please do not use abbreviations.)

Chemical	MIN	--	MAX	UOM	Chemical	MIN	--	MAX	UOM
OIL	100.000	--	100.000	%	TRICHLOROETHYLENE	0.000	--	0.100	%

ANY METAL OBJECTs PRESENT? YES NO

If yes include dimension:

Clean Harbors Profile No. 306372

E. CONSTITUENTS – Are these values based on testing or knowledge? ☑ Knowledge Testing

If constituent concentrations are base on analytical testing, analysis must be provided. If based on knowledge, basis of knowledge must be provided below.

nerator knowledge

RA	REGULATED METALS	REGULATORY LEVEL (mg/l)	TCLP mg/l	TOTAL ppm
D004	ARSENIC	5.0		
D005	BARIUM	100.0		
D006	CADMIUM	1.0		
D007	CHROMIUM	5.0		
D008	LEAD	5.0		
D009	MERCURY	0.2		
D010	SELENIUM	1.0		
D011	SILVER	5.0		
VOLATILE COMPOUNDS				
D018	BENZENE	0.5		
D019	CARBON TETRACHLORIDE	0.5		
D021	CHLOROBENZENE	100.0		
D022	CHLOROFORM	6.0		
D028	1,2-DICHLOROETHANE	0.5		
D029	1,1-DICHLOROETHYLENE	0.7		
D035	METHYL ETHYL KETONE	200.0		
D039	TETRACHLOROETHYLENE	0.7		
D040	TRICHLOROETHYLENE	0.5		
D043	VINYL CHLORIDE	0.2		
SEMI -VOLATILE COMPOUND				
D023	o-CRESOL	200.0		
D024	m-CRESOL	200.0		
D025	p-CRESOL	200.0		
026	CRESOL (TOTAL)	200.0		
027	1,4-DICHLOROBENZENE	7.5		
D030	2,4-DINITROTOLUENE	0.13		
D032	HEXACHLOROBENZENE	0.13		
D033	HEXACHLOROBUTADIENE	0.5		
D034	HEXACHLOROETHANE	3.0		
D036	NITROBENZENE	2.0		
D037	PENTACHLOROPHENOL	100.0		
D038	PYRIDINE	5.0		
D041	2,4,5-TRICHLOROPHENOL	400.0		
D042	2,4,6-TRICHLOROPHENOL	2.0		
PESTICIDES AND HERBICIDES				
D012	ENDRIN	0.02		
D013	LINDANE	0.4		
D014	METHOXYCHLOR	10.0		
D015	TOXAPHENE	0.5		
D016	2,4-D	10.0		
D017	2,4,5-TP (SILVEX)	1.0		
D020	CHLORDANE	0.03		
D031	HEPTACHLOR (AND ITS EPOXIDE)	0.008		

OTHER METALS	MIN	MAX	UOM
ALUMINUM			
ANTIMONY			
BERYLLIUM			
CALCIUM			
COPPER			
MAGNESIUM			
MOLYBDENUM			
NICKEL			
POTASSIUM			
SILICON			
SODIUM			
THALLIUM			
TIN			
VANADIUM			
ZINC			
NON METALS			
BROMINE			
CHLORINE			
FLUORINE			
IODINE			
SULFUR			
OTHER NON-METALS			
AMMONIA			
REACTIVE SULFIDE			
CYANIDE-TOTAL			
CYANIDE AMENABLE			
CYANIDE REACTIVE			
OTHER CHEMICALS			
PHENOL			
Total Petroleum Hydrocarbons			

OTHER HOCs

NONE
< 1000 PPM
>= 1000 PPM

PCBs

☑ NONE
< 50 PPM
>=50 PPM

IF PCBS ARE PRESENT, IS THE WASTE REGULATED BY TSCA 40 CFR 761?

YES ☑ NO

ADDITIONAL HAZARDS

DOES THIS WASTE HAVE ANY UNDISCLOSED HAZARDS OR PRIOR INCIDENTS ASSOCIATED WITH IT, WHICH COULD AFFECT THE WAY IT SHOULD BE HANDLED?

YES NO (If yes, explain)

ASBESTOS	FUMING / SMOKING WASTE	RADIOACTIVE
DEA REGULATED SUBSTANCE	INFECTIOUS, PATHOGENIC, OR ETIOLOGICAL AGENT	REDUCING AGENT
DIOXIN	OXIDIZER	SHOCK SENSITIVE
EXPLOSIVE	OSHA REGULATED CARCINOGENS	SPONTANEOUSLY IGNITES WITH AIR
HERBICIDE	PESTICIDE	THERMALLY SENSITIVE
NONE OF THE ABOVE	POLYMERIZABLE	WATER REACTIVE

Clean Harbors Profile No. 306372

F. REGULATORY STATUS

☑ YES NO USEPA HAZARDOUS WASTE?
D040

YES ☑ NO DO ANY STATE WASTE CODES APPLY?

Texas Waste Code

☑ YES NO IS THIS WASTE PROHIBITED FROM LAND DISPOSAL WITHOUT FURTHER TREATMENT PER 40 CFR PART 268?

LDR CATEGORY: *This is subject to LDR.*
VARIANCE INFO:

YES ☑ NO IS THIS A UNIVERSAL WASTE?

YES ☑ NO IS THIS A WASTEWATER PER 40 CFR PART 268.2?

YES NO IF ANY WASTE CODES D001, D002, D003 (OTHER THAN REACTIVE CYANIDE OR REACTIVE SULFIDE), D004-D0011, D012-DO17 NON-WASTEWATERS, OR D018- D043 APPLY, ARE ANY UNDERLYING HAZARDOUS (UHCs) PRESENT ABOVE UNIVERSAL TREATMENT STANDARDS (UTS)?

YES ☑ NO DOES TREATMENT OF THIS WASTE GENERATE A F006 OR F019 SLUDGE?

YES ☑ NO IS THIS WASTE SUBJECT TO CATEGORICAL PRETREATMENT DISCHARGE STANDARDS?

IF YES, SPECIFY POINT SOURCE CATEGORY LISTED IN 40 CFR PART 401.

YES NO IS THIS WASTE REGULATED UNDER THE BENZENE NESHAP RULES? (IS THIS WASTE FROM A CHEMICAL MANUFACTURING, COKE BY-PRODUCT RECOVERY, OR PETROLEUM REFINERY PROCESS?)

IF YES, IS THE GENERATOR'S TOTAL ANNUAL BENZENE >= 10 MEGAGRAMS? YES NO

YES NO DOES THIS WASTE CONTAIN VOC'S IN CONCENTRATIONS >=500 PPM?

YES ☑ NO DOES THE WASTE CONTAIN GREATER THAN 20% OF ORGANIC CONSTITUENTS WITH A VAPOR PRESSURE >= .3KPA (.044 PSIA)?

YES ☑ NO DOES THIS WASTE CONTAIN AN ORGANIC CONSTITUENT WHICH IN ITS PURE FORM HAS A VAPOR PRESSURE GREATER THAN 77 KPa (11.2PSIA)?

YES ☑ NO IS THIS CERCLA REGULATED (SUPERFUND) WASTE ?

YES ☑ NO IS THIS WASTE REGULATED UNDER THE OZONE DEPLETING SUBSTANCE ACT FOR ONTARIO?

G. DOT/TDG INFORMATION

DOT/TDG PROPER SHIPPING NAME:

NA3082, HAZARDOUS WASTE, LIQUID, N.O.S., ((OIL, TRICHLOROETHYLENE)), 9, PG III

H. TRANSPORTATION REQUIREMENTS

ESTIMATED SHIPMENT FREQUENCY ONE TIME WEEKLY MONTHLY QUARTERLY YEARLY OTHER

IF BULK LIQUID OR BULK SOLID PLEASE INICATE THE EXPECTED NUMBER OF LOADS PER SHIPPING FREQUENCY:

CONTAINERIZED

0-0 CONTAINERS/SHIPMENT

STORAGE CAPACITY:

CONTAINER TYPE:
- CUBIC YARD BOX
- PALLET
- TOTE TANK
- OTHER:

DRUM SIZE:

CONTAINER MATERIAL:
- STEEL
- FIBER
- PLASTIC
- OTHER

BULK LIQUID

GALLONS/SHIPMENT: *0 Min -0 Max* GAL.
FROM TANKS: TANK SIZE GAL.
FROM DRUMS

VEHICLE TYPE:
- VAC TRUCK
- TANK TRUCK
- RAILROAD TANK CAR

CHECK COMPATIBLE STORAGE MATERIALS.
- STEEL
- STAINLESS STEEL
- RUBBER LINED
- FIBERGLASS LINED
- DERAKANE
- OTHER

BULK SOLID *0 - 0*

SHIPMENT UOM:	TON	YARD
PER SHIPMENT:	MIN	MAX
STORAGE CAPACITY		TON/YD

VEHICLE TYPE:
- DUMP TRAILER
- ROLL OFF BOX
- INTERMODAL ROLLOFF BOX
- CUSCO/VACTOR
- OTHER

I. SPECIAL REQUEST

SPECIFIC DISPOSAL RESTRICTIONS OR REQUESTS:

SPECIAL WASTE HANDLING REQUIREMENTS:

OTHER COMMENTS OR REQUESTS:

J. BIENNIAL / ANNUAL REPORTING INFORMATION

SIC CODE *4953* SOURCE CODE FORM CODE

K. SAMPLE STATUS

	YES	SAMPLED BY	DATE SAMPLED	WHERE SENT
REPRESENTATIVE SAMPLE HAS BEEN SUPPLIED	NO			

GENERATOR'S CERTIFICATION

I hereby certify that all information submitted in this and attached documents is correct to the best of my knowledge. I also certify that any samples submitted are representative of the actual waste. If Clean Harbors discovers a discrepancy during the approval process, Generator grants Clean Harbors the authority to amend the profile, as Clean Harbors deems necessary, to reflect the discrepancy.

AUTHORIZED SIGNATURE	NAME (PRINT)	TITLE	DATE

Attachment 3
Analytical Results From Annual Recertification of "Industry Specific" Wastes

Safety-Kleen Systems, Inc. -- Hebron R/C
Intra-Company Waste Analysis

Lab Number: 8-001419 Lot Number: _____ Analyst/Date: Jm 2-25-08

FWT Sample Number: _____ FWT Lot Number: _____

Material sumitted as: Pure Sample - January 2008

Source or Destination: _____

Amount (Gal./Drums) _____ Pumped to/from tank: _____

Physical Appearance SK Method 9914 N/A ( )

( ) Single
(✓) Multiphase liquid Dark yellowish Brown in color

Analyst/Date: _____

pH SK Method 9906 N/A ( )

(✓) Direct ( ) Extracted by meter 5.6

Analyst/Date: _____

Setaflash SK Method 9401 N/A (✓)

( ) Flash ( ) No flash @ 140 °F

Analyst/Date: _____

( ) Specific Gravity SK Method 9903 N/A ( )
or (✓) Apparent Specific Gravity SK Method 9929

1.245 at _____ °F

Analyst/Date: _____

Water by Karl Fischer SK Method 9801 N/A (✓)

Wgt of syringe & sample _____ g
Wgt of syringe _____ g
Wgt of sample _____ g _____ % water
Volume of titrant _____ ml

Analyst/Date: _____

Phases SK Method 9912 N/A ( )

Aqueous phase	18.8 %
Organic phase	72.2 %
Bottom sludge	9.0 %
Bottom solid	_____ %
TOTAL	100%

Analyst/Date: _____

Distillation SK Method 9907 N/A ( )

		Description
Bottoms-Oil	57 %	
Bottoms non-oil	_____ %	_____
Water emulsified	13 %	
Solvent phase	30 %	
TOTAL	100%	

Analyst/Date: _____

PCB SK Method 9202 ( ) Analysis not required

Sample wt. (g) _____ Dilution factor 1 GC File# [illegible]

(✓) None Detected (Tier 1) ( ) Detected Arochlor _____ @ _____ mg/Kg (Tier 2)

Analyst/Date: _____

VOA SK Method 9203 ( ) Analysis not required

Sample Type (circle)
T=Total O=Organic
A=Aqueous S=Solid/Sludge
B=Bottoms D=Distillate

Prep Type: (circle)
N=Neat C=CS2 Ext.
M=MeOH H=Hex. Ext.
D=Distillate O=Other

Sample Weight(g) _____
GC File# 061307 01

Analyst/Date: _____

Analysts must sign and date each test if different than analyst at top of the page.

Comments _____

Laboratory analysis reviewed by / date: _____

Rev 5/16/07

VOA Calculation Worksheet
Method SK 9203

Lab Number: 8.00414

GC File #: 061B0701.D

Analyst: DM

Sample Weight (g): 1.245

Date: 26-Feb-08

Total Solvent Volume (mL): 1

NOTE: For neat liquid samples, use specific gravity for weight and 1 for total volume.

Compound	Intermediate Value (g/100mL)	Concentration of Compound (w/w%)	Normalized Percent
TCE	0.1320	0.106024	0.09%
PERC	140.1171	112.543855	94.24%
TR	0.0150	0.012048	0.01%
MHC	8.3580	6.713253	5.62%
HHC	0.0539	0.043293	0.04%
	0.0000	0.000000	0.00%
	0.0000	0.000000	0.00%
	0.0000	0.000000	0.00%
	0.0000	0.000000	0.00%
	0.0000	0.000000	0.00%
	0.0000	0.000000	0.00%
	0.0000	0.000000	0.00%
	0.0000	0.000000	0.00%
	0.0000	0.000000	0.00%
	0.0000	0.000000	0.00%
	0.0000	0.000000	0.00%
	0.0000	0.000000	0.00%
	0.0000	0.000000	0.00%
	0.0000	0.000000	0.00%
	0.0000	0.000000	0.00%
	0.0000	0.000000	0.00%
	0.0000	0.000000	0.00%
	0.0000	0.000000	0.00%
	0.0000	0.000000	0.00%
	0.0000	0.000000	0.00%
Sum:		119.4184739	

9203CALC.XLS

WASTE CODE CHANGES - NATIONAL

General Description	2007 Federal Waste Codes (From 2006 Data)	2008 Federal Waste Codes (From 2007 Data)	Changes from 2007 to 2008	Changes from 2008 to 2009	Changes from 2009 to 2010	Changes from 2010 to 2011	Changes from 2011 to 2012
Dry Cleaner (Perc) Bottoms	F002, D007, D039, D040	F002, D007, D039, D040	No Change	Add D008, D029	No Change	No Change	No Change
Dry Cleaner (Perc) Filters	F002, D007, D039, D040	F002, D007, D039, D040	No Change	NA	NA	NA	NA
Dry Cleaner (Perc) Separator Water	F002, D039, D040	F002, D039, D040	No Change	NA	NA	NA	NA
Dry Cleaning Naphtha Bottoms	D007, D039, D040	D001, D007, D039, D040	Add D001	No Change	Add D008	No Change	No Change
Dry Cleaning Naphtha Filters	D007, D039, D040	D001, D007, D039, D040	Add D001	NA	NA	NA	NA
Dry Cleaning Naphtha Separator Water	D039, D040	D001, D039, D040	Add D001	NA	NA	NA	NA

updated per Class 1
121221-1-1
(issued 1/24/13)

CHES CORE Waste Stream	Laboratory Reporting Limits Exceed RCRA Regulatory Limits Justification Not To Include Waste Code
Dry Cleaner (Perc) Bottoms/Naptha Bottoms	D018 (Benzene): There is no reason to expect benzene in this waste stream. Unlike parts washer applications, there is no opportunity for fuel related benzene, the most common source of this constituent, to enter these dry cleaning waste streams.
	D019 (Carbon Tetrachloride): This solvent is used mostly in chemical research and now is rarely used based on its known carcinogenicity. There is essentially no chance of this constituent entering this core waste stream.
	D021 (Chlorobenzene): There is no reason to suspect this highly specific-use constituent in any waste solvents produced by dry cleaning operations; no significant use in manufacturing or dry cleaning applications (Solvent used in pesticides, in chemical manufacture and for degreasing auto parts)
	D022 (Chloroform): There is no reason to suspect this highly specific-use constituent in any waste solvents produced by dry cleaning operations. Chloroform is used primarily to produce chlorodifluoromethane which is a major precursor to tetrafluoroethylene which is itself a precursor to Teflon.
	D028 (1,2-Dichloroethane): There is no reason to suspect this highly specific-use constituent in any waste solvents produced by dry cleaning operations. The chemical is used in Organic synthesis, metal degreasing, and surface coat removal.
	D030 (2,4 Dinitrotoluene): There is no reason to suspect this highly specific-use constituent is in these dry cleaning waste streams. The predominant use of 2,4 Dinitrotoluene is as an intermediate in the production of polyurethane. 2,4 Dinitrotoluene is also used in the manufacture of explosives and smokeless gunpowder.
	D032 (Hexachlorobenzene): There is no reason to suspect this highly specific-use constituent in any waste solvents produced by dry cleaning operations. It is used primarily in organic synthesis and fungicide production.
	D033 (Hexachlorobutadiene): There is no reason to suspect this highly specific-use constituent in in any waste solvents produced by dry cleaning operations. This solvent is used for many organic chemicals, chlorine production, intermediate in mfg. of rubber compounds and lubricants.
	D034 (Hexachloroethane): There is no reason to suspect that this highly specific-use chemical is in these dry cleaning waste streams. In the United States, about half of the hexachloroethane is used by the military for smoke-producing devices. It is also used to remove air bubbles in melted aluminum. Hexachloroethane may also be present as an ingredient in some fungicides, insecticides, lubricants, and plastics.
	D035 (Methyl Ethyl Ketone): There is no reason to expect this paint related solvent to be associated with dry cleaning operations.

CHES CORE Waste Stream	Laboratory Reporting Limits Exceed RCRA Regulatory Limits Justification Not To Include Waste Code
	D036 (Nitrobenzene): There is no reason to suspect that this constituent would be present in waste solvents produced from dry cleaning operations. The majority of nitrobenzene is used to manufacture aniline, which is a chemical used in the manufacture of polyurethane. Nitrobenzene is also used to produce lubricating oils and in the manufacture of dyes, drugs, pesticides, and synthetic rubber.
	D037 (Pentachlorophenol): There is no reason to suspect this highly specific-use constituent in in any waste solvents produced by dry cleaning operations. It is present in insecticide for termite control, agricultural defoliant, general herbicide, wood preservation, glue, etc.
	D038 (Pyridine): There is no reason to suspect that this highly specific-use constituent would be present in waste solvents produced from dry cleaning operations. Pyridine is used to dissolve other substances. It is also used to make many different products such as medicines, vitamins, food flavorings, paints, dyes, rubber products, adhesives, insecticides, and herbicides.
	D041 (2,4,5-Trichlorophenol): (2,4,5-Trichlorophenol): There is no reason to suspect this highly specific-use constituent in in any waste solvents produced by dry cleaning operations. It is present in Fungicide and bactericide and has no significant use in manufacturing or dry cleaning
	D042 (2,4,6-Trichlorophenol): There is no reason to suspect this highly specific-use constituent in in any waste solvents produced by dry cleaning operations. It is present in Fungicide, bactericide and preservatives.
	D043 (Vinyl Chloride): There is no reason to suspect this highly specific-use constituent and known carcinogen in any no significant use in dry cleaning. It originates from the manufacture of PVC.

Attachment 4
Typical Analysis of Industrial Wastes

GC Sample Preparation Worksheet

Lab Number: 207843 Analyst: [illegible] Date: 9/26/02

HVOA (Method SK9209) (✓) Analysis not required

Sample Weight (g) : _____ Dilution Factor : _____ GC File #: _____

Analyst / Date (if different from above) _____

Comments: _____

PCB (Method SK9202) ( ) Analysis not required

Sample Weight (g) : _____ Dilution Factor : 301 GC File #: 004F0101.D

Analyst / Date (if different from above) _____

(X) Negative (by Tier 1) ( ) Negative (by Tier 2) ( ) Positive, Identified as Arochlor _____

Peak	Sample Retenion Time	Sample Area Count	Std. Retenion Time	Std. Area Count
1				
2				
3				
4				
5				
	Total		Total	

$$\text{PPM PCB} = \frac{\text{(Area count Sample)}}{\text{(Area count standard)}} \times \frac{\text{(Dilution Factor)}}{\text{(Sample Weight)}} \times \text{Std. conc.}$$

$$= \frac{(\quad)}{(\quad)} \times \frac{(\quad)}{(\quad)} \times (\quad)$$

= _____ mg/Kg

Comments: _____

VOA (Method SK9203) ( ) Analysis not required

Sample Type: (circle) Prep Type: (circle) Sample Weight (g) : _____

T= Total O=Organic N= Neat C= CS_2 Ext. GC File #: 052B0101.D

A= Aqueous S = Solid/Sludge M= MeOH H= Hex. Ext.

B= Bottoms D= Distillate D= Distillate O= Other

Analyst / Date (if different from above) _____

Comments: _____

Data File C:\HPCHEM\3\DATA\092602\004F0101.D Sample Name: 2.02843

Injection Date	: 9/26/02 11:13:18	Seq. Line :	1
Sample Name	: 2.02843	Vial :	4
Acq. Operator	: al 92602	Inj :	1
		Inj Volume :	2 µl
Sequence File	: C:\HPCHEM\3\SEQUENCE\NOW12.S		
Method	: C:\HPCHEM\3\METHODS\1PCB_T1.M		
Last changed	: 9/24/02 13:44:42		

9202 TIER 1 ANALYSIS

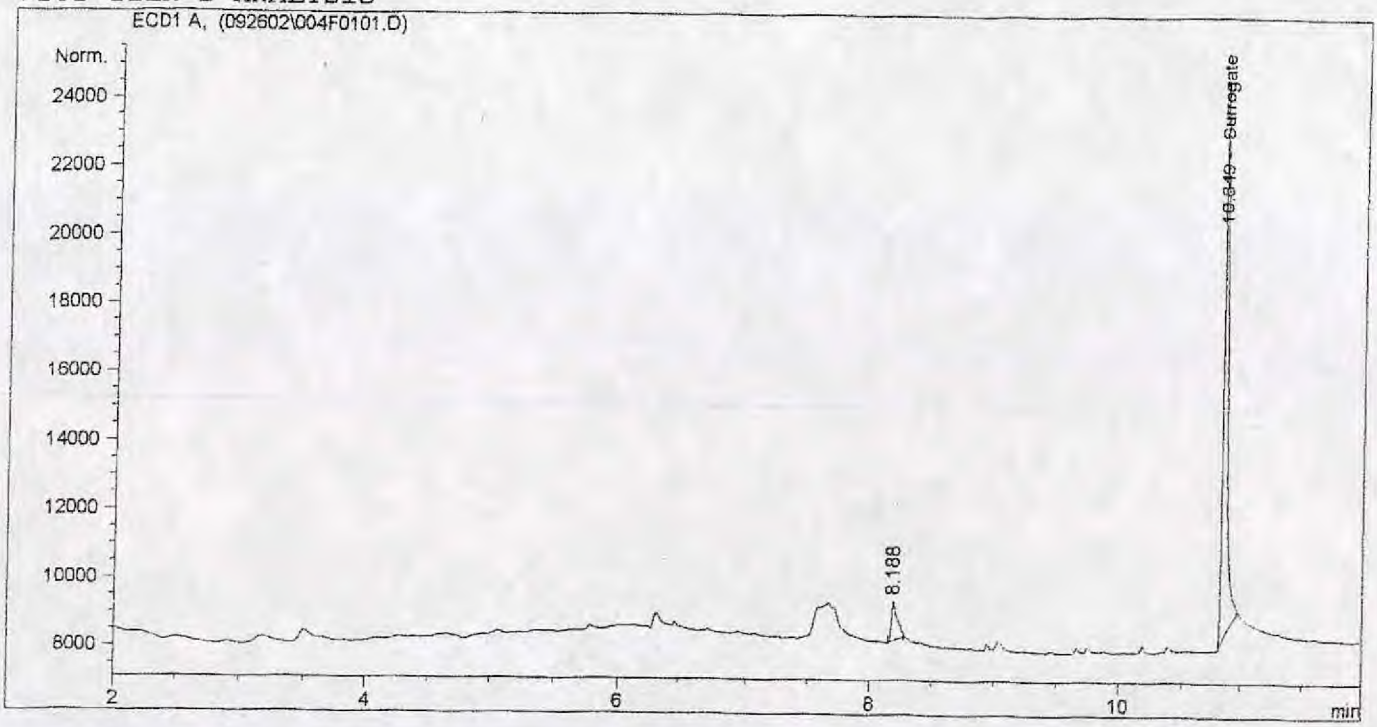

External Standard Report

Sorted By	:	Signal
Calib. Data Modified	:	Thursday, May 30, 1902 18:42:51
Multiplier	:	2.000e4
Dilution	:	1.0000
Sample Amount	:	5.00000e-3 [% Surrogate] (not used in calc.)
Uncalibrated peaks RF	:	0.00000

Signal 1: ECD1 A,
Results obtained with enhanced integrator!

RetTime [min]	Type	Area counts*s	Amt/Area	Amount % Surrogat	Grp	Name
1.250	BV	4.19993e5	0.00000	0.00000		?
8.188	PB	3635.63599	0.00000	0.00000		?
10.849	PB	4.43924e4	1.60311e-8	14.23320		Surrogate
Totals :				14.23320		

VOA Calculation Worksheet
Method SK 9203

Lab Number: 2-02843

GC File #: 052B0101.D

Analyst: CAB

Sample Weight (g): 1.275

Date: 26-Sep-02

Total Solvent Volume (mL): 1

NOTE: For neat liquid samples, use specific gravity for weight and 1 for total volume.

Compound	Intermediate Value (g/100mL)	Concentration of Compound (w/w%)	Normalized Percent
MEOH	0.2230	0.174902	0.26%
ETOH	0.3180	0.249412	0.37%
ACE	3.7045	2.905490	4.36%
MECL	80.2133	62.912392	94.45%
TOL	0.0107	0.008392	0.01%
TR	0.4611	0.361647	0.54%
	0.0000	0.000000	0.00%
	0.0000	0.000000	0.00%
	0.0000	0.000000	0.00%
	0.0000	0.000000	0.00%
	0.0000	0.000000	0.00%
	0.0000	0.000000	0.00%
	0.0000	0.000000	0.00%
	0.0000	0.000000	0.00%
	0.0000	0.000000	0.00%
	0.0000	0.000000	0.00%
	0.0000	0.000000	0.00%
	0.0000	0.000000	0.00%
	0.0000	0.000000	0.00%
	0.0000	0.000000	0.00%
	0.0000	0.000000	0.00%
	0.0000	0.000000	0.00%
	0.0000	0.000000	0.00%
	0.0000	0.000000	0.00%
	0.0000	0.000000	0.00%
	Sum:	66.61223529	

SOP 9203 CALIBRATION REPORT

ANALYST/DATE: 09-26-02 LAB #: 202843 GC FILE #: 052B01D1D

COR CODE	RPT CODE	NAME	HP5 RT	SBWAX RT	RF	AREA COUNT	AMOUNT (g/100mL)
MEOH		METHYL ALCOHOLS	3.308	9.337	3.0335E-06	7.35E+04	0.2230
ETOH		ETHYL ALCOHOL	3.867	10.468	2.4393E-06	1.30E+05	0.3180
ACE		ACETONE	4.354	7.136	2.2265E-06	1.66E+06	3.7045
MECL		METHYLENE CHLORIDE	5.108	10.200	6.1266E-06	1.31E+07	80.2133
TOL		TOLUENE	12.818	13.491	1.0287E-06	1.04E+04	0.0107
TR		TRACE VOLATILE ORGANICS			1.9706E-06	2.34E+05	0.4611

Data File C:\HPCHEM\1\DATA\092602\052B0101.D Sample Name: 2-02843

Injection Date : 9/26/02 10:56:37 Seq. Line : 1
Sample Name : 2-02843 Vial : 52
Acq. Operator : Inj : 1
Inj Volume : 1 µl

al 9-26-02

Sequence File : C:\HPCHEM\1\SEQUENCE\NOW78.S
Acq. Method : C:\HPCHEM\1\METHODS\9203DUAL.M
Last changed : 5/10/01 23:15:35
Analysis Method : C:\HPCHEM\1\METHODS\9203DUAL.M
Last changed : 5/10/01 22:59:55
SOP 9203 VOA ANALYSIS

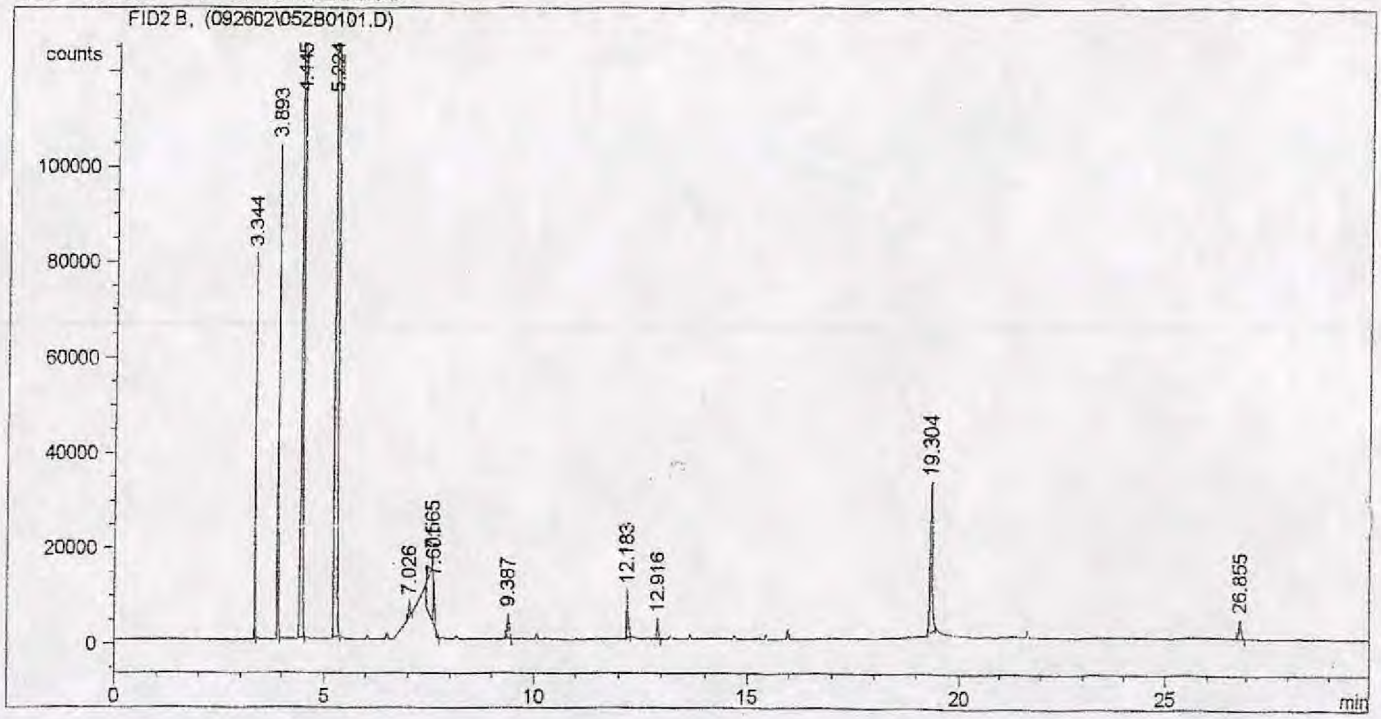

Area Percent Report

Sorted By : Retention Time
Multiplier : 1.0000
Dilution : 1.0000

Signal 1: FID2 B,
Results obtained with enhanced integrator!

Peak #	RetTime [min]	Sig	Type	Area counts*s	Height [counts]	Area %
1	3.344	1	BB	7.35192e4	8.08762e4	0.48260
2	3.893	1	BB	1.30380e5	1.03704e5	0.85585
3	4.445	1	BB	1.66382e6	7.87830e5	10.92175
4	5.224	1	BB	1.30927e7	5.36882e6	85.94365
5	7.026	1	PP	9633.25781	3403.60229	0.06324
6	7.565	1	BV	7.98773e4	1.38481e4	0.52433
7	7.601	1	VP	1.54201e4	9059.92285	0.10122
8	9.387	1	BB	1.68973e4	5377.97217	0.11092

Data File C:\HPCHEM\1\DATA\092602\052B0101.D

Sample Name: 2-02843

Peak #	RetTime [min]	Sig	Type	Area counts*s	Height [counts]	Area %
9	12.183	1	PB	2.56341e4	1.02412e4	0.16827
10	12.916	1	BB	1.03736e4	4278.23242	0.06809
11	19.304	1	PB	1.00714e5	3.17364e4	0.66111
12	26.855	1	BB	1.50768e4	4087.16968	0.09897
Totals :				1.52340e7	6.42326e6	

*** End of Report ***

Data File C:\HPCHEM\1\DATA\092602\002F0101.D Sample Name: 2-02843

Injection Date	: 9/26/02 10:56:37	Seq. Line :	1
Sample Name	: 2-02843	Vial :	2
Acq. Operator	:	Inj :	1
		Inj Volume :	1 µl

a 9/26/02

Sequence File : C:\HPCHEM\1\SEQUENCE\NOW78.S
Method : C:\HPCHEM\1\METHODS\9203DUAL.M
Last changed : 5/10/01 23:15:35
SOP 9203 VOA ANALYSIS

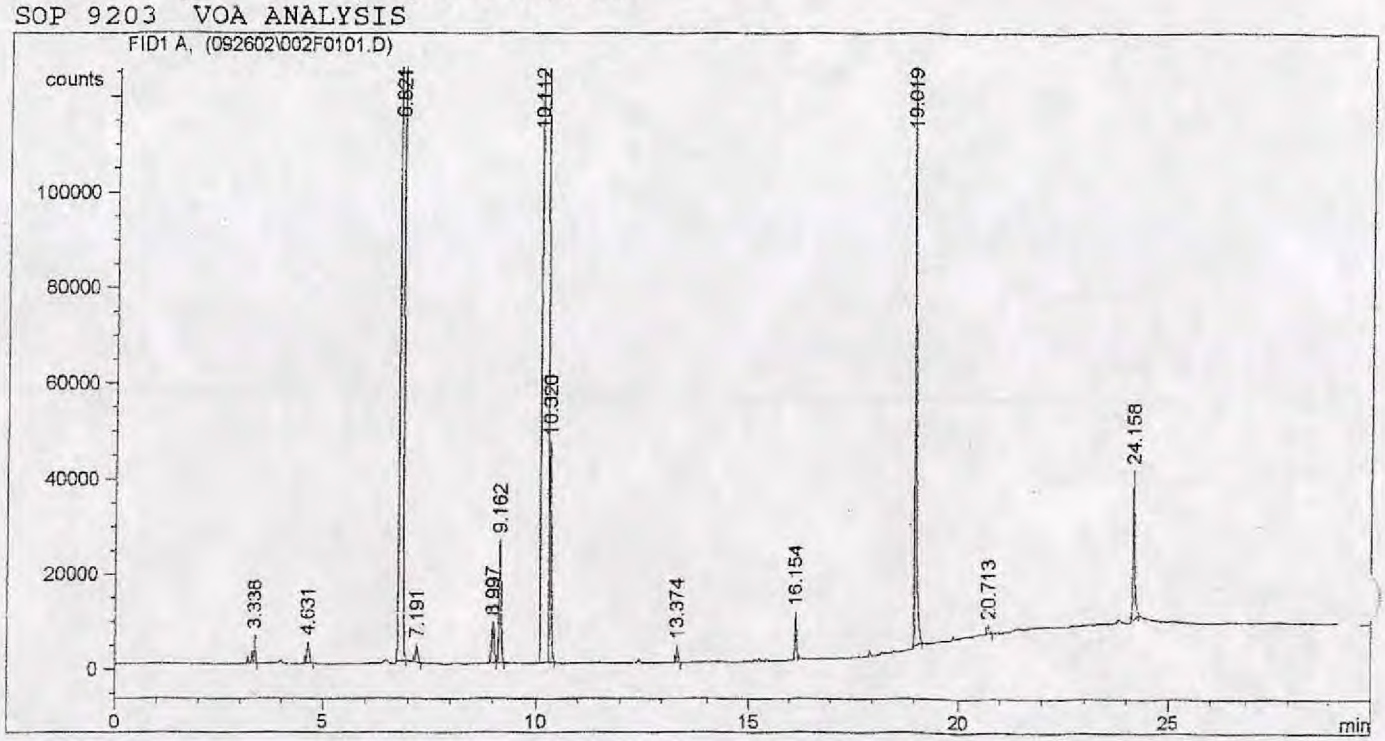

Area Percent Report

Sorted By : Retention Time
Multiplier : 1.0000
Dilution : 1.0000

Signal 1: FID1 A,
Results obtained with enhanced integrator!

Peak #	RetTime [min]	Sig	Type	Area counts*s	Height [counts]	Area %
1	3.338	1	VB	1.13863e4	5939.31787	0.06744
2	4.631	1	BB	1.82346e4	4452.63623	0.10800
3	6.821	1	BB	1.80878e6	4.72520e5	10.71330
4	7.191	1	PP	1.52280e4	3946.61523	0.09019
5	8.997	1	BV	3.44322e4	8714.93945	0.20394
6	9.162	1	VB	8.38991e4	2.60257e4	0.49693
7	10.112	1	BV	1.42198e7	2.84358e6	84.22299
8	10.320	1	VB	1.48450e5	4.64060e4	0.87926
9	13.374	1	BB	1.03353e4	3601.57812	0.06122
10	16.154	1	PB	2.51434e4	9822.92383	0.14892

Data File C:\HPCHEM\1\DATA\092602\002F0101.D Sample Name: 2-02843

Peak #	RetTime [min]	Sig	Type	Area counts*s	Height [counts]	Area %
11	19.019	1	BB	3.90420e5	1.51307e5	2.31243
12	20.713	1	PB	5711.41748	1825.46204	0.03383
13	24.158	1	PB	1.11692e5	3.16155e4	0.66155
Totals :				1.68835e7	3.60976e6	

*** End of Report ***

SAFETY KLEEN CORP. - HEBRON RECYCLE CENTER
PRELIMINARY EXAMINATION OF BULK OR DRUM RECEIPTS

(✓)Envirosystems Order ( )FRS Order ( )Other: _____

Lot Number: PR-12812 Date Received: 9-26-02 Sampled By / Date / Time: CH / 9-26-02

Received From: SAFETY KLEEN ENVIRO. Manifest/BL #: 04102

Location: Manati, PR. Manifest Line Item #: 11 A

Bulk Receipt ( )Not Applicable

Gallons Received: 4286 Pumped to Tank: 205 By / Date / Time: CH 9-26-02

Drum Receipt (✓)Not Applicable

Drum #	Appearance	Total Volume(gal)	Pumpable Gallons	Non-Pumpable Gallons	Water Layer Gallons	Specific Gravity Solvent Layer	Radioactivity
1							( )ND ( )Det
2							( )ND ( )Det
3							( )ND ( )Det
4							( )ND ( )Det
5							( )ND ( )Det
6							( )ND ( )Det
7							( )ND ( )Det
8							( )ND ( )Det
9							( )ND ( )Det
10							( )ND ( )Det
11							( )ND ( )Det
12							( )ND ( )Det
13							( )ND ( )Det
14							( )ND ( )Det
15							( )ND ( )Det
16							( )ND ( )Det
17							( )ND ( )Det
18							( )ND ( )Det
19							( )ND ( )Det
20							( )ND ( )Det
	Totals					XXXXXXXXXXX	XXXXXX

Radioactivity: ND = Not Detected Det = Detected

Comments

DEWA # 29843

Please print or type. (Form designed for use on elite (12-pitch) typewriter.)

Form Approved. OMB No. 2050-0039 Expires 3-31-02

UNIFORM HAZARDOUS WASTE MANIFEST

1. Generator's US EPA ID No. PRD090399718 | Manifest Document No. 04102

2. Page 1 of 2

Information in the shaded areas is not required by Federal law.

3. Generator's Name and Mailing Address
SAFETY-KLEEN ENVIROSYSTEMS
KM51 HWY #2
PO BOX 31098
MANATI, PR 00674

4. Generator's Phone (787 854-1090

A. State Manifest Document Number

B. State Generator's ID 99960

5. Transporter 1 Company Name: HECTOR L GARCIA INC

6. US EPA ID Number: PRR000012179

C. State Transporter's ID HW-52

D. Transporter's Phone 787 793-7815

7. Transporter 2 Company Name: CROWLEY LINER SERVICES IN

8. US EPA ID Number: PRD080558360

E. State Transporter's ID

F. Transporter's Phone 787 729 1022

9. Designated Facility Name and Site Address 000642
SAFETY-KLEEN SYSTEMS, INC.
581 MILLIKEN DR SE
HEBRON, OH 43025

10. US EPA ID Number: OHD980587364

G. State Facility's ID Z0039

H. Facility's Phone 740 929-3532

	11. US DOT Description (Including Proper Shipping Name, Hazard Class and ID Number)	12. Containers No.	Type	13. Total Quantity	14. Unit Wt/Vol	I. Waste No.
a.	RQ WASTE DICHLOROMETHANE 6.1 UN1593 PG III (1000 LBS) (ERG#160)	1	TT	4200	G	F002 OUTS409H
b.						
c.						
d.						

J. Additional Descriptions for Materials Listed Above
A) SPENT METHYLENE CHLORIDE
T/T : 857-061 POUNDS: 44,432
SEALS: 81928
81941

K. Handling Codes for Wastes Listed Above
(A) S02 T63

48sw

MFST R/T#102573142 0 006 50

15. Special Handling Instructions and Additional Information
EMERGENCY RESP 800-468-1760(24 HR). IF UNDELIVERABLE RETURN TO GENERATOR. SK CORP AUTHORIZED TO RETAIN LICENSED SUBSEQUENT CARRIERS AS NECESSARY.
SKDOT# A: 28846 B: C: D:

16. GENERATOR'S CERTIFICATION: I hereby declare that the contents of this consignment are fully and accurately described above by proper shipping name and are classified, packed, marked, and labeled, and are in all respects in proper condition for transport by highway according to applicable international and national government regulations.

If I am a large quantity generator, I certify that I have a program in place to reduce the volume and toxicity of waste generated to the degree I have determined to be economically practicable and that I have selected the practicable method of treatment, storage, or disposal currently available to me which minimizes the present and future threat to human health and the environment; OR, if I am a small quantity generator, I have made a good faith effort to minimize my waste generation and select the best waste management method that is available to me and that I can afford.

Printed/Typed Name: Silvia Escalona | Signature: Silvia Escalona | Date: Month 09 Day 11 Year 02

TRANSPORTER

17. Transporter 1 Acknowledgement of Receipt of Materials

Printed/Typed Name: Angel Bosa | Signature: Angel Bosa | Date: Month 09 Day 11 Year 02

18. Transporter 2 Acknowledgement of Receipt of Materials

Printed/Typed Name: Howard Cardia | Signature: [illegible] | Date: Month 09 Day 11 Year 02

19. Discrepancy Indication Space

FACILITY

20. Facility Owner or Operator: Certification of receipt of hazardous materials covered by this manifest except as noted in item 19

Printed/Typed Name | Signature | Date: Month Day Year

EPA Form 8700-22 (Rev. 3-05) Previous editions obsolete

SAFETY-KLEEN CORP.

DMPL# A)0000334670

6

INSTRUCTIONS FOR COMPLETION OF THIS FORM, REFER CODE OF FEDERAL REGULATIONS 40 PART 262.20

timate, including suggestions for reducing this burden, to Chief, Information Policy nd Regulatory Affairs, Office of Management and Budget, Washington, DC 20503.

lering data, and completing and reviewing the form. Send comments regarding the bu rotection Agency, 401 M Street, SW, Washington, DC 20460; and to the Office of Info

223 U.S. Environm

ENTERED APR 0 4 2002

Safety Kleen Corporation
Material Analysis

Order Number ___ ___ ___ / ___ ___ --- ___ ___ Date Received 3-27-02 Date Submitted _____

Analysis Type (X,S,T,D) X Pre-Ship# _____ Manifest Control Number _____

Lot Number 20-21761 Lab Number 2-01235 Total Drums Received This Order _____

Drum Summary	Drums This Analysis	Gallons This Analysis
Pumpable		
Debeading		
Flowable		
Grindable		
Incinerate		
Totals		

Bulk Summary
Gallons This Analysis _____

Company Name Gabriel Performance
Location Ashtabula, OH
Manifest Document Number _____
EPA Hazardous Waste Number _____
State Hazardous Waste Id Number: _____

Material Submitted As Methanol

Composite of Drums This Analysis Bulk

General Composition:
__ By Appearance (A)
✓ By Centrifuge (C)

Aqueous Phase	99.85	vol%
Organic Phase	0	vol%
Bottom Sludge	0	vol%
Bottom Solid	0.15	vol%
Total	100.0	vol%

General Analysis T Type (T,O,A,S)
Color Brown
Water Content 41.2 wt%
Non Volatile Residue _____ wt%
PH: ✓ Direct(D) __ Extracted(E)
by __ Paper(P) ✓ Meter(M)
PH Results 7.5
Viscosity _____ cps
Specific Gravity at 68° F 0.896

API Gravity _____
Flammability: __ Not Applicable(X)
✓ Flashpt(F) __ Flash(Y) __ No Flash(N)
__ Setaflash(S) __ Open(O) ✓ Closed(C)
at 73° F
Radioactivity: __ N.D.(N) __ Detected(D)
PCB: ✓ N.D.(N) __ Detected(D) __ PPM
Neutralization (Acidity) _____
Centrifuged Solids: _____ vol%

Recovery Evaluation: A Type(T,O,A)

Bottoms-Oil		vol%
Bottoms-Non-Oil	3.0	vol%
Water Emulsion	97.0	vol%
Distillate		vol%
Total	100.0	vol%

(Thermoset Bottoms Yes or No) NO
Bottoms Viscosity _____
Bottoms Description Solid
Estimated Recovery _____ vol%

Distillate Analysis
PH: ✓ Direct(D) __ Extracted(E)
by __ Paper(P) ✓ Meter(M)
PH Results 9.0
Odor _____
Acid Acceptance _____ wt%
Distillate Water _____ vol%

Fuel Evaluation __ Type(T,O,A,S,B)

Heat Content		BTU/LB
Total Halogens		wt%
Ash Upon Combustion		wt%

Inorganics:

Chlorine		wt%
Bromine		wt%
Fluorine		wt%
Sulfur		wt%
Phosphorus		wt%

Metals Content: __ Direct(D) __ Acid-Digested(A) By __ AA(A) __ ICP(I) __ XRF(X)

	(<)		(<)		(<)	
'R		PPM		PPM		PPM
'B		PPM		PPM		PPM
ZN		PPM		PPM		PPM

Analysis Types: X = Waste for Recycling S = Synthetic Fuel T = Tolling D = Disposal
Sample Types: T = Total Sample O = Organic Phase A = Aqueous Phase S = Sludge/Solids B = Distillation Bottoms

Safety Kleen Corporation
Material Analysis

Volatile Organic Composition: __ Type(T,G,A,S,D)

Units: __wt%(W) __vol%(V) __gm/lit(M) __area%(A) by __TCD(T) __FID(F) __ECD(E) __Others(O)

CODE	COMPOUND NAME (waste analysis screen 3)	AMOUNT	CODE	COMPOUND NAME (waste analysis screen 4)	AMOUNT
MEOH	METHYL ALCOHOL				
ETOH	ETHYL ALCOHOL				
ACE	ACETONE				
FMF	TRICHLOROFLUOROMETHANE (MF)				
IPA	PROPYL ALCOHOL, ISO				
MEAC	METHYL ACETATE				
MECL	METHYLENE CHLORIDE				
FTF	TRICHLOROTRIFLUOROETHANE (TF)				
NM	NITROMETHANE				
NPA	PROPYL ALCOHOL, N				
MEK	METHYL ETHYL KETONE				
BO	BUTYLENE OXIDE, 1,2				
ETAC	ETHYL ACETATE				
IBA	BUTYL ALCOHOL, ISO				
111	TRICHLOROETHANE, 1,1,1				
IPAC	PROPYL ACETATE, ISO				
NBA	BUTYL ALCOHOL, N				
DIOX	DIOXANE, 1,4				
TCE	TRICHLOROETHYLENE				
NPAC	PROPYL ACETATE, N				
MIBK	METHYL ISOBUTYL KETONE				
TOL	TOLUENE				
IBAC	BUTYL ACETATE, ISO				
NBAC	BUTYL ACETATE, N				
PERC	PERCHLOROETHYLENE				
XYLS	XYLENES				
CHX	CYCLOHEXANONE				
LAHC	LOW-BOILING ALIPHATIC HYDRO/CARB				
MS	MINERAL SPIRITS				
HHC	HIGH-BOILING ALIPHATIC HYDRO/CBN				
NMP	METHYLPYRROLIDONE, N				
DCBS	DICHLOROBENZENES				
CSLS	CRESOLS			OTHER-1	
IPHR	ISOPHORONE			OTHER-2	
				TOTAL	100.0%

Additional Analytical Information:

Codes: Segregation ____

Process ____ Price ____

Disposition ✓ Accept __Reject __Hold

Disposition: Methanol + Water

Analyst ____ Date ____ Initials ____ Date 4-1-08

VOA Calculation Worksheet
Method SK 9203

Lab Number: 2-01235

GC File #: 054B0101

Analyst: TMN

Sample Weight (g): 0.896

Date: 27-Mar-02

Total Solvent Volume (mL): 1

NOTE: For neat liquid samples, use specific gravity for weight and 1 for total volume.

Compound	Intermediate Value (g/100mL)	Concentration of Compound (w/w%)	Normalized Percent
MEOH	39.7336	44.345536	100.00%
	0.0000	0.000000	0.00%
	0.0000	0.000000	0.00%
	0.0000	0.000000	0.00%
	0.0000	0.000000	0.00%
	0.0000	0.000000	0.00%
	0.0000	0.000000	0.00%
	0.0000	0.000000	0.00%
	0.0000	0.000000	0.00%
	0.0000	0.000000	0.00%
	0.0000	0.000000	0.00%
	0.0000	0.000000	0.00%
	0.0000	0.000000	0.00%
	0.0000	0.000000	0.00%
	0.0000	0.000000	0.00%
	0.0000	0.000000	0.00%
	0.0000	0.000000	0.00%
	0.0000	0.000000	0.00%
	0.0000	0.000000	0.00%
	0.0000	0.000000	0.00%
	0.0000	0.000000	0.00%
	0.0000	0.000000	0.00%
	0.0000	0.000000	0.00%
	0.0000	0.000000	0.00%
	0.0000	0.000000	0.00%
	0.0000	0.000000	0.00%
	Sum:	44.34553571	

SOP 9203 CALIBRATION REPORT

ANALYST/DATE: TL 3-27-02 LAB #: 241235 GC FILE #: 0548014

COR CODE	RPT CODE	CODE NAME	HP5 RT	SBWAX RT	RF	AREA COUNT	AMOUNT (g/100mL)
MEOH		METHYL ALCOHOLS	3.308	9.337	3.0335E-06	1.31E+07	39.7336

Data File C:\HPCHEM\1\DATA\032702\054B0101.D Sample Name: 2-01235

==========

Injection Date : 3/27/02 19:13:54 Seq. Line : 1
Sample Name : 2-01235 Vial : 54
Acq. Operator : 3-27-02 Inj : 1
Inj Volume : 1 µl

Sequence File : C:\HPCHEM\1\SEQUENCE\NOW78.S
Acq. Method : C:\HPCHEM\1\METHODS\9203DUAL.M
Last changed : 5/10/01 23:15:35
Analysis Method : C:\HPCHEM\1\METHODS\9203DUAL.M
Last changed : 5/10/01 22:59:55
SOP 9203 VOA ANALYSIS

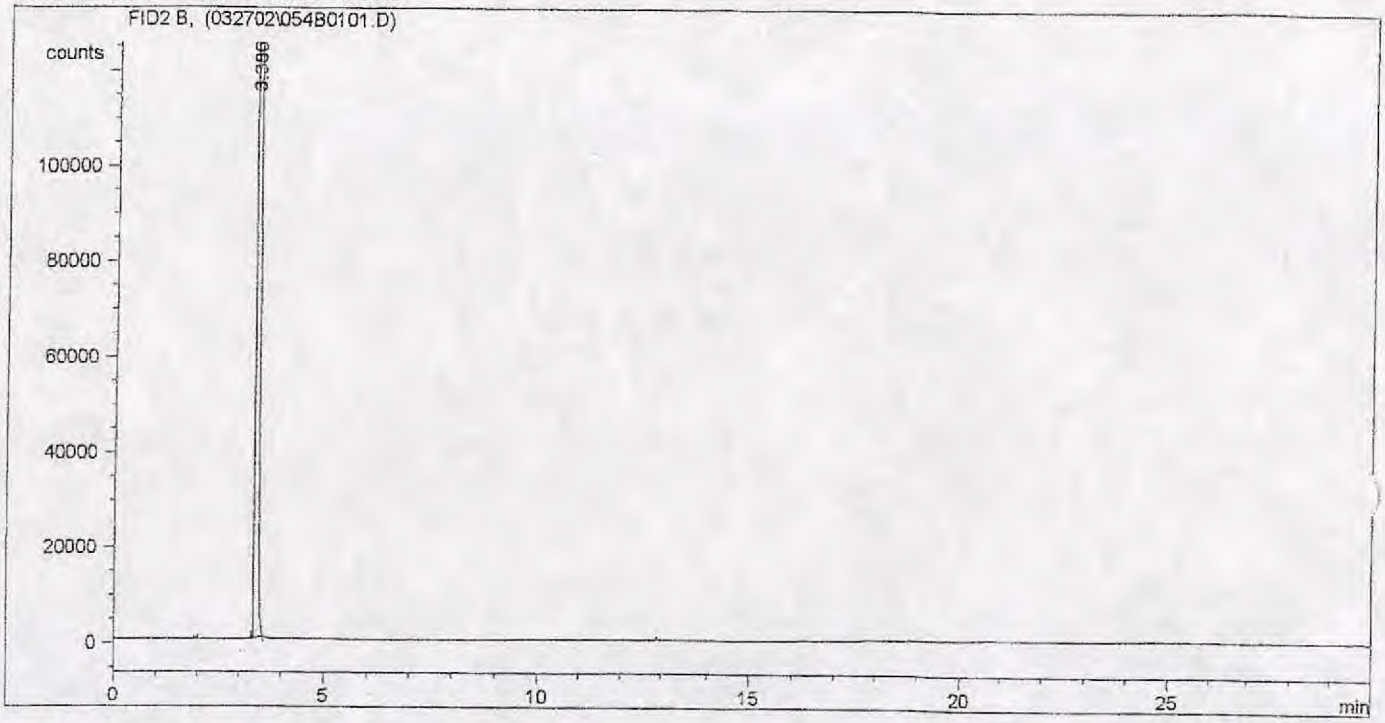

==========

Area Percent Report

==========

Sorted By : Retention Time
Multiplier : 1.0000
Dilution : 1.0000

Signal 1: FID2 B,
Results obtained with enhanced integrator!

Peak #	RetTime [min]	Sig	Type	Area counts*s	Height [counts]	Area %
1	3.386	1	PB	1.30984e7	4.28539e6	1.000e2

Totals : 1.30984e7 4.28539e6

==========

*** End of Report ***

Data File C:\HPCHEM\1\DATA\032702\004F0101.D Sample Name: 2-01235

Injection Date	: 3/27/02 19:13:54	Seq. Line :	1
Sample Name	: 2-01235	Vial :	4
Acq. Operator	: TL 3-27-02	Inj :	1
		Inj Volume :	1 µl
Sequence File	: C:\HPCHEM\1\SEQUENCE\NOW78.S		
Method	: C:\HPCHEM\1\METHODS\9203DUAL.M		
Last changed	: 5/10/01 23:15:35		

SOP 9203 VOA ANALYSIS

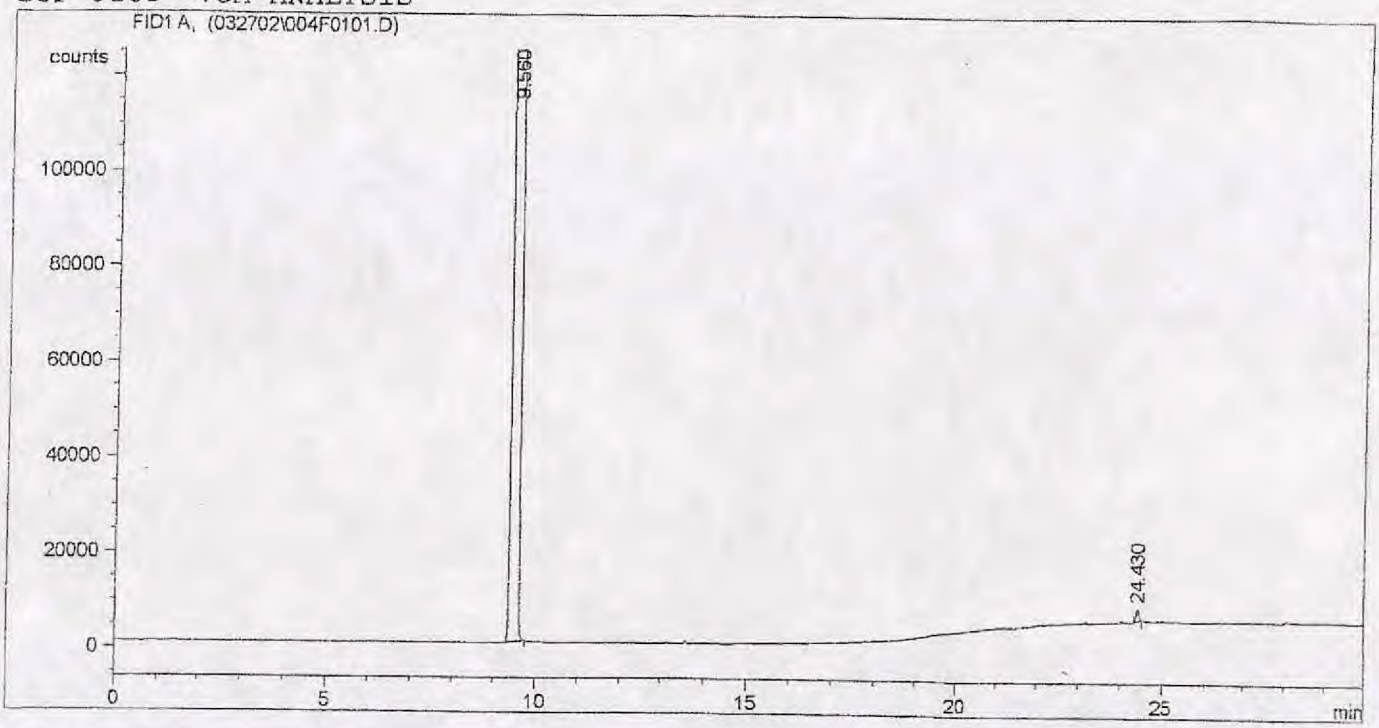

Area Percent Report

Sorted By	:	Retention Time
Multiplier	:	1.0000
Dilution	:	1.0000

Signal 1: FID1 A,
Results obtained with enhanced integrator!

Peak #	RetTime [min]	Sig	Type	Area counts*s	Height [counts]	Area %
1	9.560	1	BB	1.38389e7	1.93847e6	99.92009
2	24.430	1	PB	1.10668e4	2711.71460	0.07991
Totals :				1.38499e7	1.94119e6	

*** End of Report ***

Data File C:\HPCHEM\3\DATA\032702\004F0101.D Sample Name: 2-01235

Injection Date	: 3/27/02 15:40:02	Seq. Line :	1
Sample Name	: 2-01235	Vial :	4
Acq. Operator	: TL 3-27-02	Inj :	1
		Inj Volume :	2 µl

Sequence File : C:\HPCHEM\3\SEQUENCE\NOW12.S
Method : C:\HPCHEM\3\METHODS\1PCB_T1.M
Last changed : 2/8/02 23:40:47
9202 TIER 1 ANALYSIS

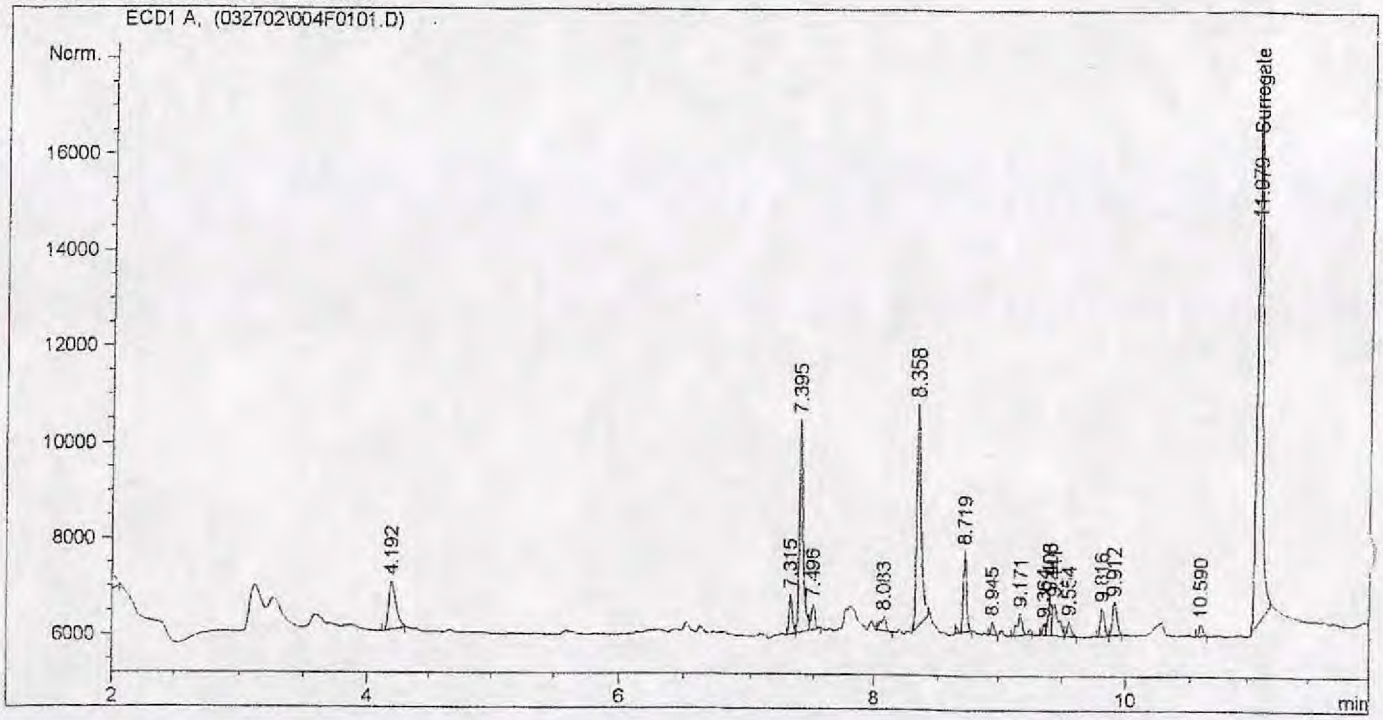

External Standard Report

Sorted By : Signal
Calib. Data Modified : Sunday, July 08, 1901 19:10:25
Multiplier : 2.000e4
Dilution : 1.0000
Sample Amount : 5.00000e-3 [% Surrogate] (not used in calc.)
Uncalibrated peaks RF : 0.00000

Signal 1: ECD1 A,
Results obtained with enhanced integrator!

RetTime [min]	Type	Area counts*s	Amt/Area	Amount % Surrogat	Grp	Name
0.854	PB	4.06763e6	0.00000	0.00000	?	
4.192	PB	4188.63330	0.00000	0.00000	?	
7.315	PV	1618.89465	0.00000	0.00000	?	
7.395	VB	8985.67773	0.00000	0.00000	?	
7.496	BB	1229.47424	0.00000	0.00000	?	
8.083	PB	830.21539	0.00000	0.00000	?	
8.358	PB	1.02998e4	0.00000	0.00000	?	

Data File C:\HPCHEM\3\DATA\032702\004F0101.D Sample Name: 2-01235

RetTime [min]	Type	Area counts*s	Amt/Area	Amount % Surrogat	Grp	Name
8.719	BB	3192.04956	0.00000	0.00000	?	
8.945	PP	532.28455	0.00000	0.00000	?	
9.171	PB	1584.84766	0.00000	0.00000	?	
9.364	PV	371.31232	0.00000	0.00000	?	
9.408	VV	1343.79980	0.00000	0.00000	?	
9.441	VB	2046.13330	0.00000	0.00000	?	
9.554	BB	672.28033	0.00000	0.00000	?	
9.816	PB	1357.57996	0.00000	0.00000	?	
9.912	BB	1528.54126	0.00000	0.00000	?	
10.590	PB	560.85168	0.00000	0.00000	?	
11.079	PB	2.99453e4	1.59161e-7	95.32228	Surrogate	
13.197	PB	2696.92163	0.00000	0.00000	?	
Totals :				95.32228		

*** End of Report ***

GC Sample Preparation Worksheet

Lab Number: 2-01235 Analyst: TM Date: 3-27-02

HVOA (Method SK9209) (✓) Analysis not required

Sample Weight (g): _____ Dilution Factor: _____ GC File #: _____

Analyst / Date (if different from above) _____

Comments: _____

PCB (Method SK9202) ( ) Analysis not required

Sample Weight (g): _____ Dilution Factor: 301 GC File #: 004F0101

Analyst / Date (if different from above) _____

(✓) Negative (by Tier 1) ( ) Negative (by Tier 2) ( ) Positive, Identified as Arochlor _____

Peak	Sample Retenion Time	Sample Area Count	Std. Retenion Time	Std. Area Count
1				
2				
3				
4				
5				
	Total		Total	

$$\text{PPM PCB} = \frac{\text{(Area count Sample)}}{\text{(Area count standard)}} \times \frac{\text{(Dilution Factor)}}{\text{(Sample Weight)}} \times \text{Std. conc.}$$

$$= \frac{(\quad)}{(\quad)} \times \frac{(\quad)}{(\quad)} \times (\quad)$$

= _____ mg/Kg

Comments: _____

VOA (Method SK9203) ( ) Analysis not required

Sample Type: (circle) Prep Type: (circle) Sample Weight (g): _____

T= Total	O=Organic	N= Neat	C= Cs2 Ext.	GC File #: 054B0101
A= Aqueous	S = Solid/Sludge	M= MeOH	H= Hex. Ext.	
B= Bottoms	D= Distillate	D= Distillate	O= Other	

Analyst / Date (if different from above) _____

Comments: _____

PRELIMINARY EXAMINATION OF BULK OR DRUM RECIEPTS

(✓) Envirosystems Order ( ) FRS Order ( ) Non Haz ( ) Other:_____

Lot Number: 20-21761 Date Received: 3-27-02 Sampled By/Date: BS 3-27-02

Received From: GABRIEL PERFORMANCE PRODUCTS Manifest /BL #: 27247

Location: ASHTABULA, OH. Manifest Line Item #: 11-A

Bulk Receipt ( )Not Applicable

Gallons Received: 6181 Pumped to Tank: 41 By / Date: BS 3-27-02

Drum Receipt (✓)Not Applicable

Drum #	Appearance	Total Volume(gal)	Pumpable Gallons	Non-Pumpable Gallons	Water Layer Gallons	Specific Gravity Solvent Layer	Radioactivity
1							( )ND ( )Det
2							( )ND ( )Det
3							( )ND ( )Det
4							( )ND ( )Det
5							( )ND ( )Det
6							( )ND ( )Det
7							( )ND ( )Det
8							( )ND ( )Det
9							( )ND ( )Det
10							( )ND ( )Det
11							( )ND ( )Det
12							( )ND ( )Det
13							( )ND ( )Det
14							( )ND ( )Det
15							( )ND ( )Det
16							( )ND ( )Det
17							( )ND ( )Det
18							( )ND ( )Det
19							( )ND ( )Det
20							( )ND ( )Det
	Totals					XXXXXXXXXXXX	XXXXXX

Radioactivity: ND = Not Detected Det = Detected

Comments

Please print or type. (Form designed for use on elite (12-pitch) typewriter.)

Form Approved. OMB No. 2050-0039.

UNIFORM HAZARDOUS WASTE MANIFEST

1. Generator's US EPA ID No. OHD003913308 Manifest Document No. 2724

2. Page 1 of 1

Information in the shaded areas is not required by Federal law.

3. Generator's Name and Mailing Address
GABRIEL PERFORMANCE PRODUCTS
725 STATE ROAD, ASHTABULA, OH 44004

4. Generator's Phone (440) 992-3200

A. State Manifest Document Number

B. State Generator's ID

5. Transporter 1 Company Name
HARNETT TRUCKING, INC.

6. US EPA ID Number OHR000104571

C. State Transporter's ID SAME

D. Transporter's Phone 716-827-7200

7. Transporter 2 Company Name

8. US EPA ID Number

E. State Transporter's ID

F. Transporter's Phone

9. Designated Facility Name and Site Address
SAFETY KLEEN SYSTEMS, INC.
581 MILLIKEN DR SE
HEBRON, OH 43025

10. US EPA ID Number OHD980587364

G. State Facility's ID

H. Facility's Phone 740-929-3532

11. US DOT Description (Including Proper Shipping Name, Hazard Class and ID Number)	HM	12. Containers No.	Type	13. Total Quantity	14. Unit Wt/Vol	I. Waste No.
a. WASTE METHANOL, 3, UN 1230, PG II (ERG #131)	X	001	TT	6001	G	D001 F003
b.						
c.						
d.						

J. Additional Descriptions for Materials Listed Above
SWB-309-3
SURVEY #2389965, CONTROL #2119700
One time LDR on file 1/22/02

K. Handling Codes for Wastes Listed Above

15. Special Handling Instructions and Additional Information T-44 45720 LBS.
EMERGENCY CONTACT: (800) 424-9300 (24 hr.) SKDOT #24574
Use protective gear when handling this waste. Avoid inhalation, ingestion, & skin contact. If undeliverable, return to generator. PURCHASE ORDER #002008

16. GENERATOR'S CERTIFICATION: I hereby declare that the contents of this consignment are fully and accurately described above by proper shipping name and are classified, packed, marked, and labeled, and are in all respects in proper condition for transport by highway according to applicable international and national government regulations.
If I am a large quantity generator, I certify that I have a program in place to reduce the volume and toxicity of waste generated to the degree I have determined to be economically practicable and that I have selected the practicable method of treatment, storage, or disposal currently available to me which minimizes the present and future threat to human health and the environment; OR, if I am a small quantity generator, I have made a good faith effort to minimize my waste generation and select the best waste management method that is available to me and that I can afford.

Printed/Typed Name: R Coppelino Signature: R. Coppelino Month Day Year 03 27 02

TRANSPORTER

17. Transporter 1 Acknowledgement of Receipt of Materials
Printed/Typed Name: Frank Drummond Signature: Frank Drummond Month Day Year 03 27 02

18. Transporter 2 Acknowledgement of Receipt of Materials
Printed/Typed Name Signature Month Day Year

FACILITY

19. Discrepancy Indication Space

20. Facility Owner or Operator: Certification of receipt of hazardous materials covered by this manifest except as noted in Item 19.
Printed/Typed Name Signature Month Day Year

ENTERED AUG 2 8 2002

Safety Kleen Corporation
Material Analysis

Order Number _ _ _ _ _ --- 1 1 _ Date Received 7/17/02 Date Submitted _____

Analysis Type (X,S,T,D) X Pre-Ship# _ _ _ _ _ _ Manifest Control Number _ _ _ _ _ _ _ _ --- _

Lot Number LA 12726 Lab Number 2-05210 Total Drums Received This Order _____

Drum Summary	Drums This Analysis	Gallons This Analysis	Bulk Summary Gallons This Analysis
Pumpable			
Deheading			
Flowable			
Grindable			
Incinerate			
Totals			

Company Name SAFETY-KLEEN
Location LAUREL MS
Manifest Document Number
EPA Hazardous Waste Number
State Hazardous Waste Id Number:

Material Submitted As WASTE FLAM LIQ. Composite of Drums This Analysis 1-14 DRUMS

General Composition:
✓ By Appearance (A)
__ By Centrifuge (C)

Aqueous Phase	0.27	vol%
Organic Phase	99.73	vol%
Bottom Sludge		vol%
Bottom Solid		vol%
Total	100.0	vol%

General Analysis I Type (T,O,A,S)
Color Lt Yellow
Water Content _____ wt%
Non Volatile Residue _____ wt%
PH: __Direct(D) ✓Extracted(E)
by __Paper(P) ✓Meter(M)
PH Results 5.3
Viscosity _____ cps
Specific Gravity at 78 F 1.210

API Gravity _____
Flammability: ✓ Not Applicable(X)
__Flashpt(F) __Flash(Y) __No Flash(N)
__Setaflash(S) __Open(O) __Closed(C)
at _____ F
Radioactivity: __N.D.(N) __Detected(D)
PCB: ✓N.D.(N) __Detected(D) ____PPM
Neutralization (Acidity) _____
Centrifuged Solids: _____ vol%

Recovery Evaluation: D Type(T,O,A)

Bottoms-Oil	5.0	vol%
Bottoms-Non-Oil		vol%
Water Emulsion	1.0	vol%
Distillate	94.0	vol%
Total	100.0	vol%

(Thermoset Bottoms Yes or No) NO
Bottoms Viscosity Med
Bottoms Description 0.1
Estimated Recovery _____ vol%

Distillate Analysis
PH: __Direct(D) ✓Extracted(E)
by __Paper(P) ✓Meter(M)
PH Results 6.6
Odor _____
Acid Acceptance _____ wt%
Distillate Water _____ vol%

Fuel Evaluation __Type(T,O,A,S,B)

Heat Content		BTU/LB
Total Halogens		wt%
Ash Upon Combustion		wt%

Inorganics:

Chlorine		wt%
Bromine		wt%
Fluorine		wt%
Sulfur		wt%
Phosphorus		wt%

Metals Content: __Direct(D) __Acid-Digested(A) By __AA(A) __ICP(I) __XRF(X)

	(<)		(<)		(<)	
CR		PPM		PPM		PPM
PB		PPM		PPM		PPM
ZN		PPM		PPM		PPM

Analysis Types: X = Waste for Recycling S = Synthetic Fuel T = Testing D = Disposal
Sample Types: T = Total Sample O = Organic Phase A = Aqueous Phase S = Sludge/Solids B = Distillation Bottoms

Safety Kleen Corporation
Material Analysis

Volatile Organic Composition: __ Type(T,O,A,S,D)

Units: __wt%(W) __vol%(V) __gm/lit(M) __area%(A) by __TCD(T) __FID(F) __ECD(E) __Others(O)

CODE	COMPOUND NAME (waste analysis screen 3)	AMOUNT	CODE	COMPOUND NAME (waste analysis screen 4)	AMOUNT
MEOH	METHYL ALCOHOL				
ETOH	ETHYL ALCOHOL				
ACE	ACETONE				
FMF	TRICHLOROFLUOROMETHANE (MF)				
IPA	PROPYL ALCOHOL, ISO				
MEAC	METHYL ACETATE				
MECL	METHYLENE CHLORIDE				
FTF	TRICHLOROTRIFLUOROETHANE (TF)				
NM	NITROMETHANE				
NPA	PROPYL ALCOHOL, N				
MEK	METHYL ETHYL KETONE				
BO	BUTYLENE OXIDE, 1,2				
ETAC	ETHYL ACETATE				
IBA	BUTYL ALCOHOL, ISO				
111	TRICHLOROETHANE, 1,1,1				
IPAC	PROPYL ACETATE, ISO				
NBA	BUTYL ALCOHOL, N				
DIOX	DIOXANE, 1,4				
TCE	TRICHLOROETHYLENE				
NPAC	PROPYL ACETATE, N				
MIBK	METHYL ISOBUTYL KETONE				
TOL	TOLUENE				
IBAC	BUTYL ACETATE, ISO				
NBAC	BUTYL ACETATE, N				
PERC	PERCHLOROETHYLENE				
XYLS	XYLENES				
CHX	CYCLOHEXANONE				
LAHC	LOW-BOILING ALIPHATIC HYDRO/CARB				
MS	MINERAL SPIRITS				
HHC	HIGH-BOILING ALIPHATIC HYDRO/CBN				
NMP	METHYLPYRROLIDONE, N				
DCBS	DICHLOROBENZENES				
CSLS	CRESOLS		OTHER-1		
IPHR	ISOPHORONE		OTHER-2		
			TOTAL		100.0%

Additional Analytical Information:

Codes: Segregation ____

Process ____ Price ____

Disposition ✓ Accept __Reject __Hold

Disposition: Mecha

Analyst MS Date 7-24-02 Initials ____ Date 7-26-02 Rich

Sample Types: T = Total Sample O = Organic Phase A = Aqueous Phase S = Sludge or Solid D = Distillate

VOA Calculation Worksheet
Method SK 9203

Lab Number: 2-02210

GC File #: 071B1901.D

Analyst: D.M.

Sample Weight (g): 1.21

Date: 23-Jul-02

Total Solvent Volume (mL): 1

NOTE: For neat liquid samples, use specific gravity for weight and 1 for total volume.

Compound	Intermediate Value (g/100mL)	Concentration of Compound (w/w%)	Normalized Percent
MEOH	5.3148	4.392397	4.61%
MECL	81.5035	67.358264	70.64%
HEX	5.6328	4.655207	4.88%
LHC	22.7429	18.795785	19.71%
HHC	0.1770	0.146281	0.15%
	0.0000	0.000000	0.00%
	0.0000	0.000000	0.00%
	0.0000	0.000000	0.00%
	0.0000	0.000000	0.00%
	0.0000	0.000000	0.00%
	0.0000	0.000000	0.00%
	0.0000	0.000000	0.00%
	0.0000	0.000000	0.00%
	0.0000	0.000000	0.00%
	0.0000	0.000000	0.00%
	0.0000	0.000000	0.00%
	0.0000	0.000000	0.00%
	0.0000	0.000000	0.00%
	0.0000	0.000000	0.00%
	0.0000	0.000000	0.00%
	0.0000	0.000000	0.00%
	0.0000	0.000000	0.00%
	0.0000	0.000000	0.00%
	0.0000	0.000000	0.00%
	0.0000	0.000000	0.00%
	0.0000	0.000000	0.00%
	Sum:	95.34793388	

Data File C:\HPCHEM\1\DATA\071902\071B1901.D Sample Name: 2-02210

==========

Injection Date : 7/19/02 22:19:39 DM 7/23/02 Seq. Line : 19
Sample Name : 2-02210 Vial : 71
Acq. Operator : Inj : 1
Inj Volume : 1 µl

Acq. Method : C:\HPCHEM\1\METHODS\DUAL_NR.M
Last changed : 7/18/02 12:21:28
Analysis Method : C:\HPCHEM\1\METHODS\9203DUAL.M
Last changed : 5/10/01 22:59:55
SOP 9203 VOA ANALYSIS 1.210

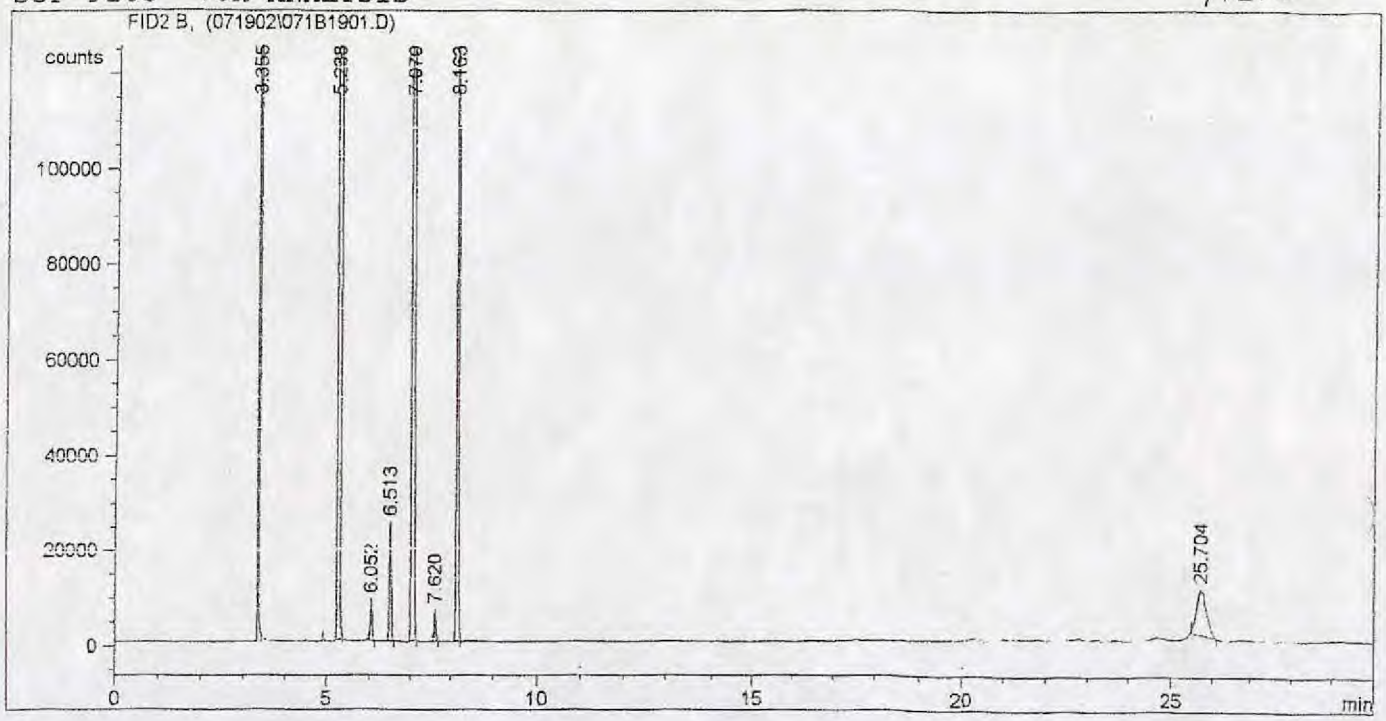

==========

Area Percent Report

==========

Sorted By : Retention Time
Multiplier : 1.0000
Dilution : 1.0000

Signal 1: FID2 B,
Results obtained with enhanced integrator!

Peak #	RetTime [min]	Sig	Type	Area counts*s	Height [counts]	Area %
1	3.355	1	BB	1.75204e6	1.65639e6	8.53362
2	5.238	1	BB	1.33033e7	5.46503e6	64.79591
3	6.052	1	BP	2.53960e4	8689.14160	0.12370
4	6.513	1	BB	7.52686e4	2.51387e4	0.36661
5	7.070	1	BB	4.69720e6	1.55579e6	22.87852
6	7.620	1	BB	1.84724e4	6732.71289	0.08997
7	8.163	1	BB	4.96781e5	1.64617e5	2.41966
8	25.704	1	BB	1.62609e5	9516.37988	0.79202

Data File C:\HPCHEM\1\DATA\071902\071B1901.D Sample Name: 2-02210

Totals : 2.05311e7 8.89191e6

==========

*** End of Report ***

ata File C:\HPCHEM\1\DATA\071902\021F1901.D Sample Name: 2-02210

==========

Injection Date : 7/19/02 22:19:39 Seq. Line : 19
Sample Name : 2-02210 Vial : 21
Acq. Operator : Inj : 1
Inj Volume : 1 µl

DM 7/23/02

Acq. Method : C:\HPCHEM\1\METHODS\DUAL_NR.M
Last changed : 7/18/02 12:21:28
Analysis Method : C:\HPCHEM\1\METHODS\9203DUAL.M
Last changed : 5/10/01 22:59:55
SOP 9203 VOA ANALYSIS

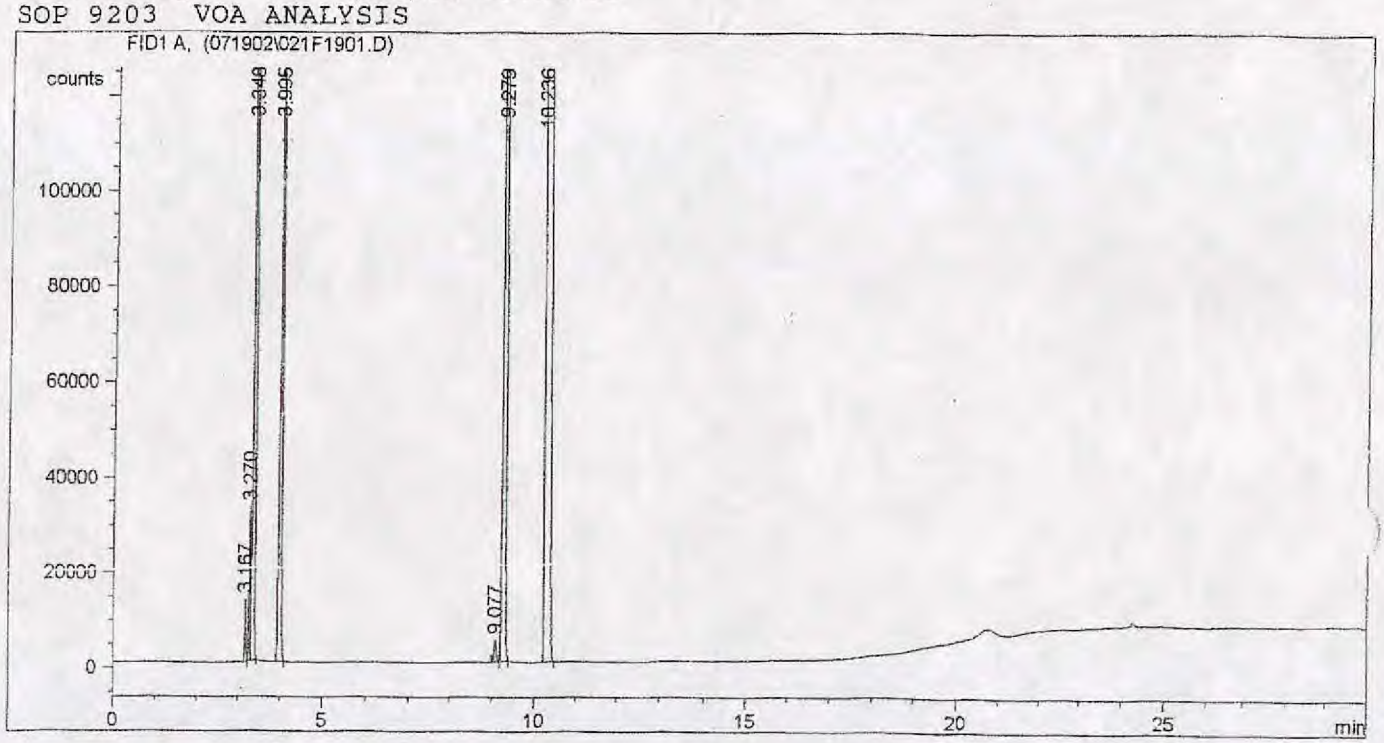

==========

Area Percent Report

==========

Sorted By : Retention Time
Multiplier : 1.0000
Dilution : 1.0000

Signal 1: FID1 A,
Results obtained with enhanced integrator!

Peak #	RetTime [min]	Sig	Type	Area counts*s	Height [counts]	Area %
1	3.167	1	BP	2.50860e4	1.31950e4	0.13775
2	3.270	1	VV	6.71808e4	3.24491e4	0.36890
3	3.348	1	VB	4.21946e6	2.14157e6	23.16987
4	3.995	1	BB	4.56118e5	1.42458e5	2.50463
5	9.077	1	BP	1.81710e4	4636.48975	0.09978
6	9.279	1	VB	1.62125e6	4.77364e5	8.90257
7	10.236	1	BB	1.18037e7	2.54771e6	64.81650

Totals : 1.82110e7 5.35938e6

==========

*** End of Report ***

SOP 9203 CALIBRATION REPORT

ANALYST/DATE: CM 7/23/02 LAB #: 2-02210 GC FILE #: 0713j901.D

COR CODE	RPT CODE	NAME	HP5 RT	SBWAX RT	RF	AREA COUNT	AMOUNT (g/100mL)
MEOH		METHYL ALCOHOLS	3.308	9.337	3.0335E-06	1.75E+06	5.3148
MECL		METHYLENE CHLORIDE	5.108	10.200	6.1266E-06	1.33E+07	81.5035
HEX	HEXS	HEXANE, N-	6.859	3.619	1.1992E-06	4.70E+06	5.6328
LHC		LOW BOILING HYDROCARBONS			1.1514E-06	1.98E+07	22.7429
HHC		HIGH BOILING HYDROCARBONS			1.0883E-06	1.63E+05	0.1770

GC Sample Preparation Worksheet

Lab Number: 2-02210 Analyst: Dh Date: 7/23/02

HVOA (Method SK9209)

Sample Weight (g) : _____ Dilution Factor : _____ ( ) Analysis not required

Analyst / Date (if different from above) _____ GC File #: _____

Comments: _____

PCB (Method SK9202)

Sample Weight (g) : _____ Dilution Factor : 301 ( ) Analysis not required

Analyst / Date (if different from above) _____ GC File #: 008F0401.D

(✓) Negative (by Tier 1) ( ) Negative (by Tier 2) ( ) Positive, Identified as Arochlor _____

Peak	Sample Retenion Time	Sample Area Count	Std. Retenion Time	Std. Area Count
1				
2				
3				
4				
5				
	Total		Total	

$$\text{PPM PCB} = \frac{\text{(Area count Sample)}}{\text{(Area count standard)}} \times \frac{\text{(Dilution Factor)}}{\text{(Sample Weight)}} \times \text{Std. conc.}$$

$$= \frac{(\quad)}{(\quad)} \times \frac{(\quad)}{(\quad)} \times (\quad)$$

= _____ mg/Kg

Comments: _____

VOA (Method SK9203)

Sample Type: (circle) Prep Type: (circle) ( ) Analysis not required

Sample Weight (g) : _____

T= Total O=Organic N= Neat C= CS_2 Ext. GC File #: 071B1501.D

A= Aqueous S = Solid/Sludge M= MeOH H= Hex. Ext.

B= Bottoms D= Distillate D= Distillate O= Other

Analyst / Date (if different from above) _____

Comments: _____

Data File C:\HPCHEM\3\DATA\071902\008F0401.D Sample Name: 2-02210

Injection Date	: 7/19/02 14:22:58	Seq. Line :	4
Sample Name	: 2-02210	Vial :	8
Acq. Operator	: TL 7.19.02	Inj :	1
		Inj Volume :	2 µl

Sequence File : C:\HPCHEM\3\SEQUENCE\NOW12.S
Method : C:\HPCHEM\3\METHODS\1PCB_T1.M
Last changed : 7/17/02 12:18:42
9202 TIER 1 ANALYSIS

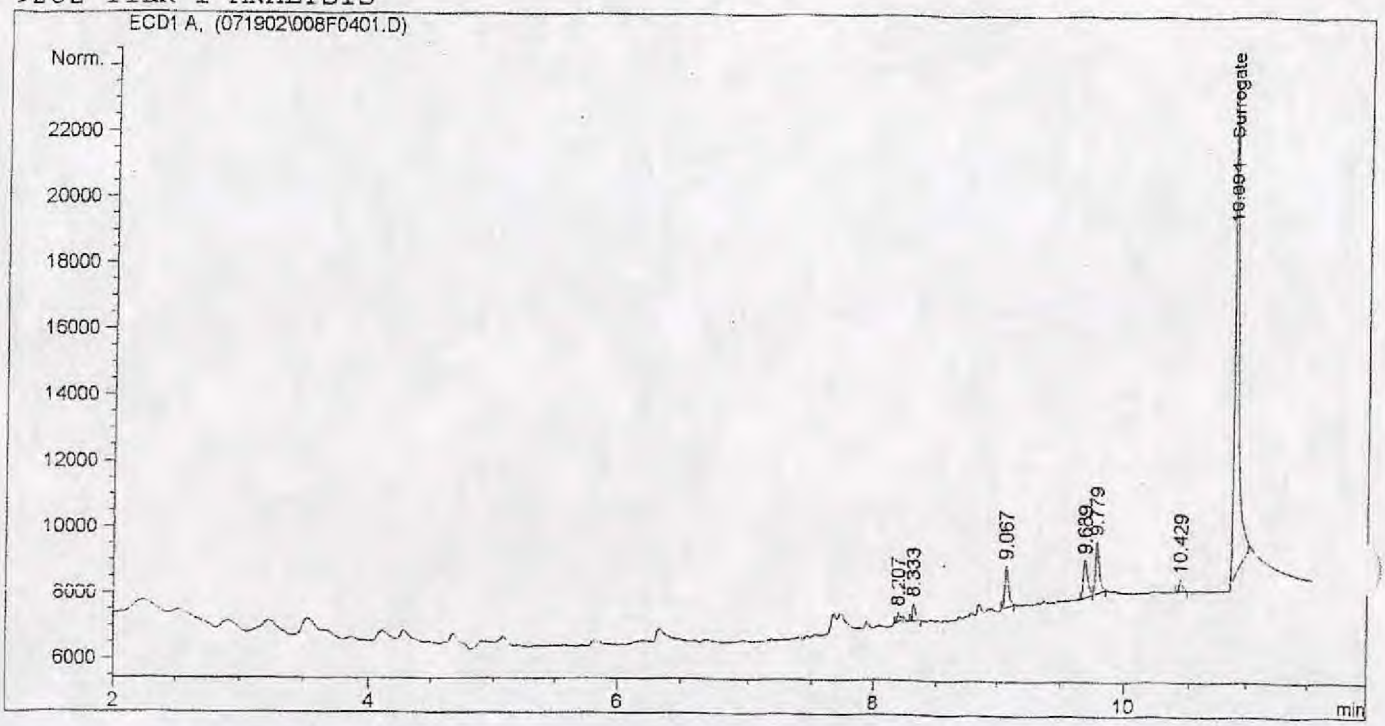

External Standard Report

Sorted By	:	Signal
Calib. Data Modified	:	Thursday, May 30, 1902 18:42:51
Multiplier	:	2.000e4
Dilution	:	1.0000
Sample Amount	:	5.00000e-3 [% Surrogate] (not used in calc.)
Uncalibrated peaks RF	:	0.00000

Signal 1: ECD1 A,
Results obtained with enhanced integrator!

RetTime [min]	Type	Area counts*s	Amt/Area	Amount % Surrogat	Grp	Name
1.169	BB	3.14791e7	0.00000	0.00000	?	
8.207	BB	528.78607	0.00000	0.00000	?	
8.333	PB	1108.53491	0.00000	0.00000	?	
9.067	BB	2626.80371	0.00000	0.00000	?	
9.689	PV	2664.46631	0.00000	0.00000	?	
9.779	VB	3708.73389	0.00000	0.00000	?	
10.429	PB	818.92688	0.00000	0.00000	?	

Data File C:\HPCHEM\3\DATA\071902\008F0401.D Sample Name: 2-02210

RetTime [min]	Type	Area counts*s	Amt/Area	Amount % Surrogat	Grp	Name
10.894	PB	4.31715e4	2.26657e-7	195.70226		Surrogate
Totals :				195.70226		

*** End of Report ***

Customer Order ( ) RRD Order ( ) Non Haz ( ) Other: HO

Lot Number: LA12726 Date Received: 7-17-02 Sampled By/Date: BP / 7-17-02

Received From: SAFETY KLEEN Manifest/BL #: 01525

Location: LAUREL, MD Manifest Line Item #: 11 - I

Bulk Receipt

(X) Not Applicable

Gallons Received: _____ Pumped to Tank: _____ By / Date: ____ / ____

Drum Receipt

( )Not Applicable

Drum #	Appearance	Total Volume(gal)	Pumpable Gallons	Non-Pumpable Gallons	Water Layer Gallons	Specific Gravity Solvent Layer	Radioactivity
1	clear	55	55	0	0	1.30	(X)ND ( )Det
2	clear	55	55	0	1	1.10	(X)ND ( )Det
3	clear	50	50	0	0	1.30	(X)ND ( )Det
4	gold	50	50	0	0	1.20	(X)ND ( )Det
5	clear	55	55	0	0	1.30	(X)ND ( )Det
6	clear	50	50	0	0	.98	(X)ND ( )Det
7	clear	55	55	0	0	1.30	(X)ND ( )Det
8	Yellow	50	50	0	0	.98	(X)ND ( )Det
9	clear	55	55	0	0	1.15	(X)ND ( )Det
10	Yellow	55	55	0	0	1.25	(X)ND ( )Det
11	Yellow	55	55	0	0	1.30	(X)ND ( )Det
12	clear	55	55	0	0	.95	(X)ND ( )Det
13	Yellow	35	35	0	1	.98	(X)ND ( )Det
14	clear	55	55	0	0	1.25	(X)ND ( )Det
~~15~~							( )ND ( )Det
16							( )ND ( )Det
17							( )ND ( )Det
18							( )ND ( )Det
19							( )ND ( )Det
20							( )ND ( )Det
	Totals	730	730	0	2	XXXXXXXXXXXX	XXXXXX

Radioactivity: ND = Not Detected Det = Detected

Comments

MARYLAND ...
Department of the Environment - Waste Management Administration
2500 Broening Highway Baltimore, MD 21224

Form Approved. OMB No. 2050-0039.

Please print or type. (Form designed for use on elite (12-pitch) typewriter.)

UNIFORM HAZARDOUS WASTE MANIFEST
(Continuation Sheet)

21. Generator's US EPA ID No.: MDD984605315025
Manifest Document No.
22. Page 2 / 3
Information in the shaded areas is not required by Federal law.

L. State Manifest Document Number MDC 0956948
M. State Generator's ID
N. State Transporter's ID HWH 142 00637 DC
O. Transporter's Phone (856) 769-2741
P. State Transporter's ID HWH DC

23. Generator's Name
SAFETY-KLEEN(TS), INC
3527 WHISKEY BOTTOM RD, LAUREL, MD 20724
301 939-6058

24. Transporter 1 Company Name
S.J. TRANSPORTATION CO.
25. US EPA ID Number NJD071629976
26. Transporter ____ Company Name
27. US EPA ID Number
Q. Transporter's Phone

28. US DOT Description (Including Proper Shipping Name, Hazard Class, and ID Number)	29. Containers No.	Type	30. Total Quantity	31. Unit Wt/Vol	R. Waste No.
a. HM X WASTE 1,1,1-TRICHLOROETHANE, 6.1, UN2831, III 2137700	001	DM	00550	P	U226
b. X WASTE DICHLOROMETHANE, 6.1, UN1593, III 1-55 2137700	001	DM	00400	P	F002
c. RQ WASTE TOXIC LIQUIDS, ORGANIC, N.O.S., (DICHLOROFLUOROETHANE, 1,1,1-TRICHLOROETHANE), 6.1, UN2810, II, RQ(F001) 15/55 2137700	015	DM	06850	P	F001
d. RQ WASTE TOXIC LIQUIDS, ORGANIC, N.O.S., (DICHLOROPENTAFLUOROPROPANE), 6.1, UN2810, II, RQ(F001) (OVERPACK) SSDM 2137700	001	DM	00400	P	F001
e. X TOXIC LIQUIDS, ORGANIC, N.O.S., (DICHLOROMETHANE), 6.1, UN2810, II 1-55 open top 2137700 B	001	DM	00200	P	N/R
f. X TOXIC LIQUIDS, ORGANIC, N.O.S., (METHYLENE CHLORIDE/ETHANOL), 6.1, UN2810, III 1-55 2137700 B	001	DM	00325	P	N/R
g. X WASTE DICHLOROMETHANE, SOLUTION, 6.1, UN1593, III 111 3/55 2137700 B	003	DM	00520	P	U080
h. RQ WASTE TOXIC LIQUIDS, ORGANIC, N.O.S., (METHYLENE CHLORIDE, TETRACHLOROETHENE), 6.1, UN2810, II, RQ(D039) 1-55 2137700 C	001	DM	00070	P	D039
i. RQ WASTE FLAMMABLE LIQUIDS, TOXIC, N.O.S., (METHANOL, DICHLOROMETHANE), 3, UN1992, II, RQ(D001) 1111 1111 14/55 2138429	014	DM	06006	P	D001

GENERATOR

S. Additional Descriptions for Materials Listed Above

	Haz. Code	Physical State	Specific Gravity	Percentage
a.	T	L	1.0	100
b.	T	L	1.0	100
c.	T	L	1.0	100
d.	T	L	1.0	100
e.		L	1.0	100
f.	T	L	1.0	100
g.	E	L	1.0	100
h.	I	L	1.0	100
i.				

T. Handling Codes for Wastes Listed Above
a. T b. T c. T d. T e. f. T g. T h. T i.

Profile Numbers
a.6PTH-003 b.6FCC-041 c.6TER-006 d.6TER-008 e.6HHE-042 f.6BBR-007 g.2321323 h.6BBF-024 i.6FCC-087

Additional Handling Instructions and Additional Information
EPA Waste Codes b. c. d. e. f. g. h. i. F003

TRANSPORTER

33. Transporter 1 Acknowledgement of Receipt of Materials
Printed/Typed Name Charles Romero
Signature
Date Month Day Year 07/16/

34. Transporter ____ Acknowledgement of Receipt of Materials
Printed/Typed Name
Signature
Date Month Day Year

FACILITY

35. Discrepancy Indication Space

Attachment 5
Laboratory Quality Assurance Manual

Laboratory Quality Assurance Manual

CLEAN HARBORS RECYCLING SERVICES of OHIO, LLC
Hebron Recycle Center
581 Milliken Drive, S.E.
Hebron, Ohio 43025

Adopted on:	October 28, 1988
Revised on:	March 25, 2008
Responsible Official:	Steve Moyer General Manager

SUBJECT TO REVISION

Table of Contents

1. Introduction to Clean Harbors....3
2. Facility Organization and Responsibilities....7
3. Quality Assurance Objectives....10
4. Safety....11
5. Sampling Procedures and Custody....13
6. Calibration and Frequency....15
7. Analytical Procedures....17
8. Data Documentation, Reduction, Validation, and Reporting....18
9. Internal Quality Control....22
10. Performance and System Audits....25
11. Preventive Maintenance....27
12. Calculation of Data Quality Indicators....33
13. Corrective and Preventative Action....36
14. Quality Control Reports to Management....41
15. References....42

1. Introduction to Clean Harbors

Clean Harbors mission is to provide safe, dependable industrial waste management services that meet the needs of its customers and the communities it serves, while conserving natural resources and protecting the environment. Clean Harbors (CH) will provide our customers with the highest quality services and products to always meet their changing needs. CH and each employee will fully comply with all applicable laws and regulations, and maintain the highest ethical business standards. CH provides its employees with the training, tools, and resources needed to serve its customers; and CH will be an involved and supportive corporate citizen, seeking to enhance the quality of life in the communities it serves.

1.1 Clean Harbors Laboratory Services Mission

Since many CH business decisions are based on analytical results, a program to ensure the reliability of these results is essential. The purpose of the CH formal quality assurance program is to assure that all results are consistent in quality, and the level of that quality can be defined and documented.

The Clean Harbors Services of Ohio, LLC is committed to providing analytical results that are scientifically valid and legally defensible. The CH laboratory performs physical and chemical analyses of products and hazardous waste for use by Clean Harbors, its customers, and regulatory agencies.

The CH laboratory provides technical support for all Clean Harbors business areas. This is accomplished through research and development, standardization of instrumentation and techniques, SOPs, training, and analyses of waste materials and environmental samples. Characterization of waste materials includes both qualitative and quantitative analyses to ensure their accurate identification and proper handling.

1.2 QA Purpose

CH is subject to numerous regulatory programs (e.g., CERCLA, RCRA, CWA). In support of these regulatory programs, Clean Harbors has established sampling and analytical protocols in accordance with accepted guidelines for quality control and quality assurance.

Quality Assurance Policy

It is the Quality Assurance Policy of Clean Harbors to provide laboratory data that is scientifically valid, legally defensible, and of known precision and accuracy. By implementation of this Quality Assurance Policy, CH insures that its laboratory data is adequate to support the associated business activities. The authority and responsibility for developing and implementing this program is assigned to the Laboratory Manager.

Quality Control

The CH laboratory uses standard Quality Control procedures as part of an overall Quality Assurance Program. These Quality Control procedures ensure uniformity of performance for all samples from initial sample handling through data generation and final reporting. The result is consistency in quality.

1.3 Hebron Recycle Center (HRC) Laboratory Resources

Adequate and properly maintained laboratory facilities and supportive functions are necessary to produce quality data. The following provides detailed descriptions of the approach to the selection, evaluation, and maintenance of equipment, facilities, and services.

Facility Description

The HRC analytical laboratory has approximately 1200 square feet of laboratory space and is manned by trained technical personnel. A diagram of the general layout of the laboratory is provided on the following page.

Laboratory Description

Factors in the environment of the laboratory affect the proper and safe functioning of equipment and chemical procedures. The HRC Laboratory facility is designed and maintained such that the environmental specifications of the respective instrument manufacturers are met.

Safety and design features provide an environment conducive to efficient and effective work on the part of the laboratory staff. In particular the following criteria will be met:

Laboratory space and facilities are adequate to properly carry out the services offered by the laboratories.

Laboratory work areas are arranged so as to maximize efficiencies in transportation, communication and to minimize contamination.

Workbench space within the laboratory is ample for the tests or analyses to be performed, and is well lighted and convenient to sinks, water, gas, vacuum, and electrical outlets.

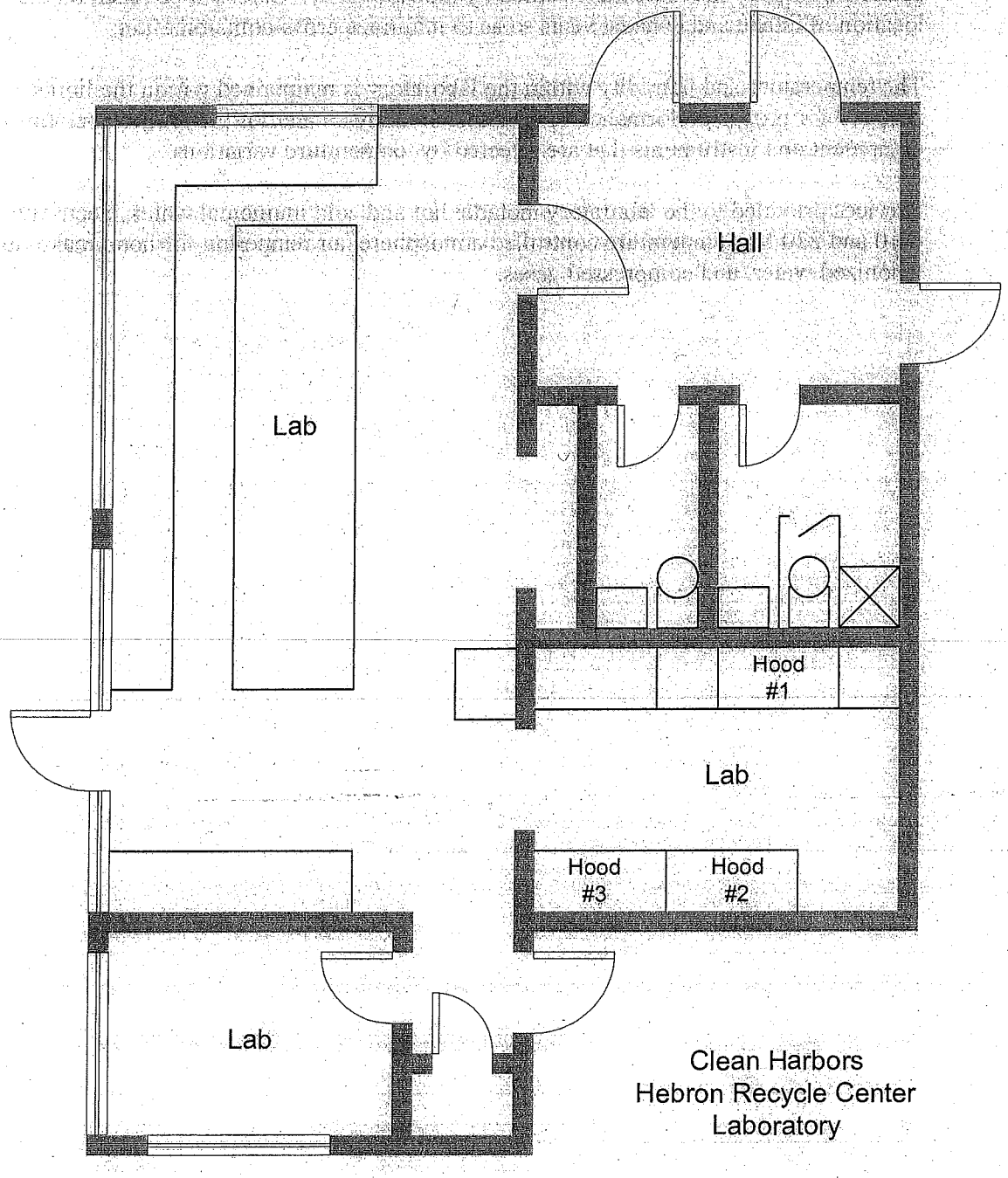

Clean Harbors
Hebron Recycle Center
Laboratory

The laboratory is well ventilated to exhaust the gases produced by the tests or analyses performed and by the materials handled by the laboratory. Care will be taken on the location of intake and exhaust vents so as to minimize cross-contamination.

The temperature and humidity within the laboratory is maintained within the limits required for proper performance of each test or analyses and for the proper operation of equipment and instruments that are affected by temperature variations.

Services provided to the laboratory include: hot and cold municipal water, electricity (110 and 220 V), temperature controlled atmosphere, air tempering for hood make-up air, deionized water, and compressed gases.

2. Facility Organization and Responsibilities

2.1 Structure

The Clean Harbors (CH) corporate headquarters is located in Norwell, MA. The HRC Laboratory, located in Hebron, OH, supports business activities for the company's recycle center located at the same site.

2.2 Responsibilities

CH employs only highly trained and qualified personnel to perform analysis of hazardous waste. The HRC laboratory must train all sampling personnel and laboratory analysts. After initial training, and yearly thereafter, personnel must demonstrate they meet the precision and accuracy as specified in the SOPs. All sampling personnel must demonstrate ability to take representative samples.

Laboratory Manager

The Laboratory Manager is responsible for the following functions:

- Reviewing work of analysts to assure quality, completeness, and adherence to CH SOPs.
- Maintaining QC records and charts.
- Training of analysts including documentation and performance review.
- Investigating any quality assurance irregularities.
- Evaluating QC records.
- Developing new and revised site-specific SOPs.
- Ensuring the laboratory meets regulatory and facility WAP compliance.

Chemist

The Chemist functions as a Technician who can fill in for or assist the Laboratory Manager when needed. Responsibilities include:

- Providing backup support to Lab Manager
- Performing analyses according to the standard methods and SOPs.
- Maintaining instruments and equipment.
- Performing quality control (QC) checks and calibrations.
- Informing the Lab Manager when QC limits have been exceeded.
- Keeping required records of analyses, log books and maintenance.

Technician

The Technician is responsible for the following functions:

- Performing analyses according to the standard methods and SOPs.
- Maintaining instruments and equipment.

- Performing quality control (QC) checks and calibrations.
- Informing the Lab Manager when QC limits have been exceeded.
- Keeping required records of analyses, log books and maintenance.

2.3 Qualifications

Clean Harbors does not have minimum educational and experience requirements for hiring personnel. However, whenever possible, the goal is to hire personnel who meet the following criteria:

Laboratory Manager

Min. of Baccalaureate chemistry degree and 0-3 years experience [or MS-Chem. with 0-1 years or BS in other related sciences and 1+ years] in the analysis of water, wastewater, solid waste, hazardous waste or other environmental samples.

Chemist

Possess a baccalaureate or higher degree or an equivalent in chemistry, biochemistry, biology, or a natural or physical science from an accredited institution of higher education.

Technician

Possess an associate's or higher degree or an equivalent in chemistry, biochemistry, biology, or a natural or physical science from an accredited institution of higher education.

2.4 Training

The most detailed attention is given to those actually working in the laboratory, but general familiarity and understanding of the QA/QC policy and procedures is a requirement of all HRC management.

It is the responsibility of Laboratory Manager to coordinate and schedule training for new laboratory employees. Employees may travel to another Clean Harbors facility for training, or alternatively, a trainer may travel to a site where employees from other CH laboratories may attend. At the close of a training session, a training form will be filled out for the training each individual received. The training form will be kept in the training files maintained by the Laboratory Manager.

In addition to individual training on specific analytical instruments, special seminars on issues related to health, safety, and quality control are provided to the staff. Documentation of training is maintained by the Laboratory Manager, Safety Manager, or trainer to aid in determining who has participated and who requires such training.

2.5 Hebron Recycle Center Laboratory Organizational Chart

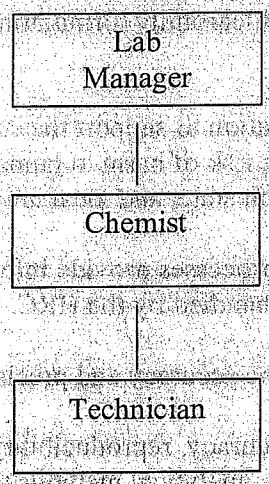

3. Quality Assurance Objectives

Clean Harbors has a number of reasons for carefully formulating and pursuing a detailed quality assurance plan. These include:

To provide the required analytical information to support the corporate Environmental, Health and Safety policy objective of minimizing risk of harm to human health and the environment while operating in compliance with federal, state, and local laws and regulations.

To assure that the information gathering processes provide information which adequately characterizes the materials that are being handled by the HRC.

To maintain a continuing assessment of the accuracy and precision of data generated.

To provide a measure of the precision, accuracy, reproducibility, comparability, and completeness requirements for each of the analytical methods to be utilized and to identify weak methodology.

To identify training needs and to document the training that the staff has received and is receiving.

To provide a record of system performance as a basis for validating data and projecting repair or replacement of equipment.

To identify operations whose overall performance can be or must be upgraded.

3.1 Quality Assurance Plan Scope

This document addresses the quality assurance/quality control issues relevant to the HRC. It provides specific details for the personnel training, the generation of standard operating procedures, and auditing functions that make it possible for the laboratory to provide scientifically valid and legally defensible data.

3.2 Common Testing Methods

pH, Karl Fisher, Heat Content (BTU), Viscosity, Specific Gravity, Volatile Organics, Halogenated Volatile Organics, Polychlorinated Biphenyls are the most common analysis run at the HRC.

4. Safety

The safety of the employees is of paramount concern to Clean Harbors. Documented plans detailing the safe handling of both chemicals and waste, fire prevention, and the communications of laboratory hazards have been put in place, and are reviewed on a frequency described within the plans. These plans are documented in the Chemical Hygiene Plan (CHP), Hazard Communications Plan (Haz Com), and the Contingency Plan.

4.1 Laboratory Safety Equipment

The laboratories are equipped with the following safety devices:

- Fire Extinguishers
- Fume Hoods
- Spill Clean-up Kits

4.2 Personal Protective Equipment (PPE)

The following equipment is provided to protect laboratory employees:

- Disposable Gloves
- Reusable Gloves
- Laboratory Coats/Uniforms, Aprons, Tyvek Sleeves
- Safety Glasses, Goggles, Face Shields
- Respirators
- Safety Shoes

4.3 Emergency Equipment

The following are provided to employees for emergency situations:

- Safety showers
- Eye Wash Stations
- First Aid kit
- Spill Response Units
- Self-Contained Breathing Apparatus (SCBA)

4.4 Chemical Storage

Volatile, corrosive, reactive, and flammable chemicals and materials shall be stored in accordance with Occupational Safety and Health Administration (OSHA) and all other pertinent regulations. Appropriate storage facilities are available for this purpose including explosion-proof cabinets for flammable materials.

4.5 Fire Safety

Adequate fire safety precautions shall be followed by all employees and include:

- appropriately rated fire extinguishers for materials handled,
- compressed gas manifolding with proper safety and alarm systems, and
- designated areas for cylinders containing flammable gasses and oxidizers.

4.6 Safety Labeling

Appropriate occupational safety and health warnings shall be posted and observed as described in the Hazard Communication plan. This includes Hazardous Materials Identification System (HMIS) labeling of all laboratory reagents and chemicals.

4.7 Contamination Prevention

Design features intended to control cross contamination include the physical separation of volatile from semivolatile organic compounds where applicable, installation of hoods and air handling equipment to prevent vapor accumulation in solvent and sample handling areas, and separation of analytical equipment from preparative areas. Samples are stored in segregated sample storage areas away from all standards, reagents, and other potentially contaminating sources.

4.8 Spill Response

A detailed action plan for spill responses is found in the latest revision of the CHP.

4.9 Building Evacuation

The procedure for the evacuation of the Hebron Recycle Center due to fire or other reasons is found in the Contingency Plan.

4.10 Safety Audits

Safety Audits of the Hebron Recycle Center Laboratory are conducted in a manner and frequency described in the latest revision of the CHP.

4.11 Safety Training

Employee safety training at the Hebron Recycle Center occurs at frequencies described in the appropriate documents (e.g., CHP, Haz Com, Contingency Plan). This training is given by the Lab Manager or his designee.

5. Sampling Procedures and Custody

Clean Harbors uses USEPA and/or ASTM procedures for sampling hazardous waste and handling samples.

5.1 Sampling Plans

The HRC will conduct sampling as specified in the facility Waste Analysis Plan using USEPA and/or ASTM protocol to ensure representative samples are obtained.

5.2 Chain of Custody

Within the HRC, samples are always stored in a secure (i.e., protected from unauthorized entry) area. The samples are labeled by the sampling personnel and identified by a sample label. The sample label information assures that samples are not confused and that analytical results apply to the sample received.

For samples received for profile analysis, the sample label is linked to the waste profile form. Upon receipt, the laboratory checks the sample label against the profile form.

Intercompany samples are supplied with documentation very similar to that provided for profile analyses. The primary difference is the requirement for more specificity as to the objective for the analysis request, since only one property may be of interest.

Blind samples and other quality control samples have special handling requirements, since their identity must be shielded from those performing the analyses. They are normally logged in as if they were a new sample, and the sample numbers and identity are passed along only to the Laboratory Manager.

5.3 Sample Log

Information on all samples received by the laboratory is entered either into a computer logbook or a written logbook. Each sample is logged on the incoming log sheet, which has an assigned lab number. That lab number is written on the sample label and connects the sample (and all data generated by the sample analysis) to the manifest/profile for that sample. When all analyses are done, the data is either entered into the computer or in a logbook depending on sample type (i.e. capability study analysis, profile analysis, or fingerprint analysis). In this way, all samples can be tracked through the laboratory and the current status, including holding times of all samples can be determined.

5.4 Sample Preservation

For the types of hazardous waste analyses that are conducted by Clean Harbors, sample preservation is not normally required other than assuring container integrity. Addition of

preservatives and sample freezing or refrigeration is not normally needed (as it may significantly alter the physical properties of the sample) but if it is, it will be noted in the method SOP.

5.5 Sample Retention

All hazardous waste samples are retained according to the following table after the analysis is completed.

Sample Type	Retention Time
Industry Specific Wastes	4 weeks
Industrial Source Wastes	4 weeks

The above retention times do not take precedence over the Waste Analysis Plan (WAP).

5.6 Receipt Analyses

As soon as the samples have been properly logged in, a specific set of analyses is implemented as described in the facility Waste Analysis Plan

The analytical results are compared to the profile information to determine whether the material can be accepted.

5.7 Sample Disposal

All sample disposals are conducted in accordance with state and federal regulations. At the HRC, each sample container may be drained of all free liquid, washed first with solvent, and then with hot soapy water, and finally rinsed with clean water. The cleaned glassware can then be disposed of with the normal commercial garbage or reused. Samples containing PCB's above the legal limit are disposed of through incineration.

6. Calibration and Frequency

This section addresses requirements for instrument calibration. Requirements for analytical support equipment (balances, thermometers, etc), are in Section 11.

The primary analytical methods used at the HRC laboratory can be found in the facility Waste Analysis Plan.

6.1 Calibration Traceability

Instrument calibration is accomplished through the use of standard reference materials of known composition and concentration that are traceable to National Institute of Standards and Testing (NIST) standards where applicable. The NIST traceable documentation will be kept in accordance with the company's record retention policy. When an instrument is calibrated or a reagent is standardized, a record must be kept of the results. Documentation of calibration must include the following data: instrument, channel identification (where applicable), date, method name, analyte name, concentrations, responses, and calibration curve or response factors.

6.2 Calibration and Standards

Initial calibration is performed using a primary standard, and calibration verification is performed using independent standards such as Calibration Check Standards (CCS) or Continuing Calibration Verification (CCV) standards. Primary and independent standards must be prepared from independent sources (e.g. different lot numbers, different vendors, etc.). Clean Harbors may provide standards to be used within the company when system-wide accuracy is desirable and the frequency of use makes it economically feasible. The analytical methods specify the procedure and frequency that are required to maintain accuracy.

Linearity

Statistical analysis of the calibration using linear regression or relative standard deviation is used to demonstrate acceptable linearity. Linearity requirements are specified in the individual methods.

Working Range

Quantitation of samples may only be performed within the working range of the calibration curve as defined by the low and high calibration standards. The quantitation range may be extended as specified in the methods through the use of an appropriate linearity check standard.

6.3 Calibration Verification

Verification of the initial calibration is performed at a prescribed frequency to demonstrate its continued acceptability. This demonstration is performed through the use of independent standards.

Before the analysis of any samples can begin, the initial calibration is demonstrated to be acceptable with an in-control analysis of the calibration check standard. In addition, the calibration verification is performed every 20 samples or every analytical batch, whichever is more frequent, and at the end of the analytical batch, unless otherwise specified in the method. In the event that an instrument is found to be out of control by way of a calibration check, all samples listed on the instrument log since the last in control sample will be re-run after the instrument is brought back into control. Additionally, the analyst will be responsible for amending sample records as is necessary due to the re-run of samples.

The use of in-house statistically determined acceptance criteria, reference method-specified acceptance criteria, or fixed acceptance criteria are employed to demonstrate the acceptability of the initial calibration.

6.4 Reinstatement of Expired Metals Standards

Expired metal calibration standards and calibration verification standards can be reinstated and reused by undergoing and documenting a re-verification procedure (this may only be done twice before standard is replaced). The re-verification procedure requires analyzing the expired standard against an identical but unexpired standard and matching the unexpired standard to within ten percent difference. Analysis of the expired standard must be bracketed by analyses of the Continuing Calibration Verification (CCV) standard and the unexpired standard.

Below is the required analytical sequence:

1. CCV (must meet QC acceptance criteria as specified in the analytical method)
2. Unexpired standard
3. Expired Standard
4. Expired Standard
5. Unexpired Standard
6. CCV (must meet QC acceptance criteria as specified in the analytical method)

Single element standards that are used infrequently can be reinstated by the same process except that in place of an unexpired single element standard an unexpired multi-element standard containing that element may be used.

Calculate percent differences for each analyte in the expired standards (#3 & 4 above) and the second analysis of the unexpired standard (# 5) against the first analysis of the unexpired standard (# 2). All of these percent differences must be less than or equal to 10 percent difference. If the expired standard meets these criteria, it is given a new useful shelf life equal to one year. Document the results of the reverification procedure.

7. Analytical Procedures

The primary tool for quality control within the analytical laboratory at the HRC is this manual along with the requirements found in the references listed in Table 3 of the Waste Analysis Plan. An SOP has been developed for each specific test method listed in Waste Analysis Plan that is conducted at the HRC lab. These SOP's are based on standard procedures and QA/QC policies. They are retained at the lab and specify sample handling and preservation; instrument calibration and frequency; analytical procedures; data documentation, reduction, validation, and reporting; quality control (i.e. method control charting procedures; preventative maintenance; data quality indicators (e.g., MDL's); and corrective actions for each method.

8. Data Documentation, Reduction, Validation, and Reporting

Protocols are in place throughout the entire report generating process, from data acquisition through its final dissemination, ensuring its legal defensibility. Such protocols concern sample receipt paperwork and labeling, data generation and acquisition, data validation, and report generation and distribution.

8.1 Data Documentation and Storage

Types of Documentation

Receiving Papers
Date, time, sample ID, customer name, stream ID, and sample receipt/delivery, as part of a Material Profile. Also may contain LDRs, chemical constituent generation declarations, Chain-of-custody, or MSDSs along with the Material Profile.

Lab Information Management System
For each sample: date, unique sample identification, initials when results are completed.

Worksheet (may be used to record data prior to entry in computer)
Raw results for each test (titers, temperature rise, sample weights, flash results, etc.), date, initials of analyst, and sample ID.

Instrument Use Logbook
Date, sample ID, type, initials, result, blanks, matrix spikes, duplicates, maintenance, and reports of corrective action.

Raw Data
Data acquired on a computer system will be maintained on magnetic media or hard copy. This data includes method files, run tables and calibration data.

Procedure for Documentation

In most cases it is preferred to record information in numbered bound notebooks with numbered pages.

Notebooks are to be returned to the Laboratory Manager when completed, seriously damaged, and at the termination of employment.

Written information is recorded in ink using a ballpoint pen. The information must be legible.

Corrections are not to obscure any previous entries. Errors are crossed out with a single line, and corrections are initialed and dated. A comment is entered as to the reason why the correction was made if the reason is not obvious.

Entries are to have appropriate units.

Entries are to be interpreted and expressed using standard scientific notation where appropriate.

Each block of testing starts on a new page and always references the study, protocols, or test method being used unless otherwise obvious. (e.g. -notebook dedicated to one test method).

Incomplete pages should have a slash through the remainder of the page, and the mark is initialed and dated.

The last page of each section in the notebook must have the analyst's signature and date. This is not to say that each page of a notebook must be signed and dated if there are no obvious section breaks. A signature and date of qualified reviewer (someone sufficiently familiar with the matters discussed to be able to comment on the notebook's sufficiency (i.e., peer review) should accompany the analyst's signature where applicable.

In each notebook the first page includes a listing of all the initials and signatures matched with printed names for entries that appear in the notebook or lab. Alternatively this may be documented in a master log.

An index is the second section in the notebooks.

All originals of the following are to be submitted to the archive to support test reports:

a. Chromatograms
b. Charts
c. Graphs
d. Printouts
e. Photos

Each contains the following:

1. Signature or initials of the analyst and date of generation.
2. References -- also included are references to appropriate notebook and page.
3. Sufficient information to reconstruct the observation conditions.

8.2 Data Reduction

Data Reduction includes all activities which convert instrument/computer responses into reportable results. These activities may involve mathematical calculations, compound identification, and summary statistics. The final results may be obtained in one of two ways:

- Direct reading from the instrument; or,
- Calculations based on instrument output, readings or responses.

The initial data reduction is the responsibility of the analyst who operates the analytical instrument. In addition to the general duties specified below, responsibilities for manual and computer related data reduction have also been specified.

- Calculate spike recoveries and precision for duplicates;
- Identify quality control data (blanks, spikes, duplicates, etc.) for review by a supervisor;
- Assure accurate transcription of sample identification numbers on all records.

Manual Data Reduction

If applicable, assure that all readings or output are precisely measured and documented;
Select appropriate formulae for calculating final results;
Enter the formulae and at least one complete sample calculation on the chromatogram or into a notebook;
Ensure that all data are accurately transcribed into notebooks, forms, or, spreadsheets;
Enter all manual calculations into notebook or data record;
Check raw data entries with final computer output to assure accurate initial data entry;
Record appropriate and accurate information concerning sample identification, operating conditions, etc.

Computer/Integrator Reduction

Assure that all data to be used in final calculations are entered accurately: sample weights or volumes, final extract volumes, dry weight factors, dilution factors, surrogate standard concentrations, etc.;
Properly interpret the computer output in terms of properly identified components, positive or negative identifications, and appropriate confirmatory measures;
Record appropriate and accurate information concerning sample identification, operating conditions, etc.;
Calculate surrogate recoveries if applicable;
Chromatographic analyses should be checked to verify that target components are within acceptable retention time windows.

8.3 Data Validation

Data validation is accomplished through a series of checks and reviews that are intended to assure that the reported results are of a verifiable and acceptable quality (SOP's for each method conducted at the HRC lab will specify the data validation criteria for that method).

- Verify that all quality control blanks meet criteria;
- Review all other quality control data (spikes, duplicates, quality control check standards, quality control check samples, etc.) for acceptability;

- Review all surrogate standard and standard additions spike recoveries for acceptability;
- Identify any sample set or data that are unacceptable and initiate appropriate corrective action measures;
- Verify component identification and/or mass spectral interpretation (where appropriate);

8.4 Data Reporting

Since data are the only products of the HRC Laboratory, as much care is taken to maintain high quality standards in terms of reporting the data as in generating it. The wide variety of reports parallels the variety of samples analyzed and purposes for performing the testing.

Types of Reports and Records

The documentation listed earlier in this section and any reports generated will be kept for at least ten years. Research and development records will be kept permanently. Data may be kept by either hard copy or electronically.

9. Internal Quality Control

The information provided below shall be considered the default minimum criteria for all methods unless specifically indicated otherwise in the method SOP being used.

9.1 Blanks - Method, Reagent, Trip and Field

A method blank must be analyzed with each analytical method and at a minimum frequency of once per analytical batch or one in twenty (1/20) samples, whichever is more frequent. Where an analytical method has no preparatory procedures, the instrument blank or reagent blank may fulfill this requirement. The blank concentration shall not be subtracted from any associated sample data. All blank results must be recorded.

Instrument Blank

For each analytical batch (EAB), a blank shall be analyzed to demonstrate the absence of analytical interferences in the instrumentation and may include applicable reagents. The acceptance criteria for these blanks are less than the Reporting Limit (RL).

Reagent Blank

At a minimum, once per lot of reagents, a blank shall be analyzed per the analytical method to demonstrate the absence of analytical interferences in all reagents. The acceptance criterion for this blank is less than the Reporting Limit (RL).

Method Blank

Every preparation batch or one in twenty (1/20) samples, whichever is more frequent, a blank shall be analyzed for each matrix to demonstrate the absence of analytical interferences in the entire analytical procedure including all reagents, solvents, preparatory equipment, and instrumentation. The acceptance criteria for method blanks for each analyte are less than the Reporting Limit (RL). A method blank must be subjected to all preparatory procedures that the samples undergo.

Trip and Field Blanks

Trip and field blanks are used when appropriate to demonstrate shipping and sample collection quality.

9.2 Duplicates

Where applicable, EAB or one in twenty (1/20) samples, a duplicate sample selected in an unbiased manner shall be analyzed. Results obtained from the analysis of duplicate samples are used in the assessment of method precision.

9.3 Matrix Spikes and Matrix Spike Duplicates (MS/MSD)

Where applicable, (EAB) or one in twenty (1/20) samples, a sample will be spiked with known concentrations of selected target analyte(s) and analyzed. Matrix Spike Duplicates will be analyzed in place of sample duplicates for methods requiring them. MSs and MSDs are used in the assessment of both method accuracy and precision through the determination of percent recoveries and relative percent differences respectively. The selection of the sample to be spiked should be random per matrix.

9.4 Blank Spikes or Laboratory Control Sample (LCS)

Where applicable, a LCS will be analyzed EAB or one in twenty (1/20) samples, a blank will be spiked with known concentrations of selected target analyte(s) and analyzed. The LCS is used exclusively in the assessment of method accuracy through the determination of percent recoveries (as specified in the individual methods). In control LCS results may be useful in demonstrating matrix effects when Matrix Spike results are out of control.

9.5 Surrogate Standards

Where applicable, surrogate standards will be added to every analytical sample and the percent recovery determined. Surrogate standards are compounds similar in analytical behavior to the method analytes but not expected to be present in the analytical sample. Surrogates are used to demonstrate acceptable recovery for each sample analysis. Surrogates are generally limited to GC and GC/MS analytical methods.

9.6 Internal Standards

Where applicable, internal standards will be added to every sample for puposes of analyte quantitation. Internal standards are compounds similar in analytical behavior to the method analytes but not expected to be present in the analytical sample. It is common to use deuterated analogs of the target analytes (e.g., naphthalene-d_8, where all 8 hydrogens have been replaced with deuterium atoms, resulting is a slightly different and unique mass spectra). The method of internal standard quantitation is used to bias correct analytical effects such as changes in instrument sensitivity, variability of sample viscosity, and variability with injection volume. The use of internal standards is commonly applied in GC/MS, ICP, and ICPMS methodologies.

9.7 Reference Standards

Reference standards serve as independent quality control checks of the calibration standards and are often referred to as Standard Reference Materials (SRM). These standards shall be NIST traceable where possible. They will be prepared by using materials from an independent

source and can be used to verify new calibration standards. Because of their independence, reference standards may be used as Calibration Check Standards (CCS).

9.8 Reinstatement of Expired Metals Standards

Expired metal calibration standards and calibration verification standards can be reinstated and reused by undergoing and documenting a reverification procedure (this may only be done twice before standard is replaced). The re-verification procedure requires analyzing the expired standard against an identical but unexpired standard and matching the unexpired standard to within ten percent difference. Analysis of the expired standard must be bracketed by analyses of the Continuing Calibration Verification (CCV) standard and the unexpired standard.

Below is the required analytical sequence:

1. CCV (must meet QC acceptance criteria as specified in the analytical method)
2. Unexpired standard
3. Expired Standard
4. Expired Standard
5. Unexpired Standard
6. CCV (must meet QC acceptance criteria as specified in the analytical method)

Single element standards that are used infrequently can be reinstated by the same process except that in place of an unexpired single element standard an unexpired multi-element standard containing that element may be used.

Calculate percent differences for each analyte in the expired standards (#3 & 4 above) and the second analysis of the unexpired standard (# 5) against the first analysis of the unexpired standard (# 2). All of these percent differences must be less than or equal to 10 percent difference. If the expired standard meets these criteria, it is given a new useful shelf life equal to one year. Document the results of the reverification procedure.

10. Performance and System Audits

No quality assurance/quality control program can operate without monitoring and interactive feedback. Thus, a formal program of regular reviews of laboratory equipment, procedures, and personnel are conducted and documented.

10.1 Facilities Audit

A facilities audit is a broad review of the current status of quality assurance/quality control within one laboratory or an entire facility. This audit will be carried out by Clean Harbors personnel trained to perform such audits. The scheduling of these audits will be done by the Laboratory Manager when required.

Items of the audit

An inspection of the facilities is conducted to determine the adequacy of space for laboratories, sample storage, offices and other services. Safety issues are also addressed.

The organizational chart will be reviewed and a determination made as to the adequacy of the laboratory staff's size, training and experience for the performance of its function.

Equipment and instrumentation are examined to see if they are adequate and meet the data quality objectives for the analyses being performed. The maintenance log books are reviewed.

Sample handling procedures are reviewed for sample identification, traceability, and chain-of-custody.

The methods in use at the laboratory are reviewed to determine if personnel follow the method.

Data handling procedures are reviewed for completeness of raw data documentation, data validation, and reporting.

A review is made of the quality assurance activities to determine if SOPs have been followed and if adequate calibrations and quality control data is being generated and how this data is being used.

The draft report will be provided in written form to all management staff within two weeks of the audit. At that time any clarifications or rebuttals of the deficiencies may be made. Two weeks after the draft report a final audit report will be issued. Within four weeks of the final report the Laboratory Manager will provide a written action plan.

10.2 Performance Evaluations

A performance evaluation is a means of documenting the quality of work generated by an individual, group, or an organization. These can be thought of in two ways:

The most frequent use of the term is in an individual use referring to an established job description. This written evaluation is prepared by each individual's direct supervisor annually. An oral discussion of the written evaluation is an important part of the process aimed at improving performance.

On selected occasions performance evaluations involve formal review of laboratory personnel on the instrumentation or analytical system on which they work. In this case the audit involves providing samples of known composition to the analyst to determine whether the analyst can meet the data quality objectives for that method.

10.3 Outside Laboratory Audits

When Clean Harbors uses an outside laboratory for analytical work, the lab will be audited by a facilities audit similar to that presented at the beginning of this section whenever possible. If the outside lab is being used on a regular basis then performance evaluations may be sent to that lab.

11. Preventive Maintenance

11.1 Facility Maintenance

It is the responsibility of all laboratory personnel to report to one's supervisor or other designated personnel any part of the laboratory facility needing repairs.

All supervisory and other designated personnel shall contact the Maintenance Department for routine repairs. Activities must be coordinated with the laboratory operations to ensure that maintenance activities do not interfere with on-going analytical (e.g. spray painting, fumigation, or floor waxing).

The Maintenance Department shall keep a record of all work requests submitted and processed. This record typically includes:

- Work order #
- Short description of work to be done
- Requester
- Date submitted
- Date work performed
- Date work completed

Upon completion of repairs, the Laboratory Manager or designee shall verify that the work was satisfactorily completed.

11.2 Equipment Maintenance

It is the responsibility of all laboratory personnel to report to one's supervisor or other designated person any equipment or instrumentation that requires repair or service. The responsible supervisor will evaluate the impact this defect may have had on previous calibrations or tests.

For contracted repairs/maintenance, the Laboratory Manager or designee shall submit a purchase order with an estimate of the repair. The purchase order is submitted for signature by the applicable personnel authorized to sign for the cost center, and then submitted to purchasing for any chargeable repair costs.

The Laboratory Manager or designee shall be responsible for identifying and marking the instrument as out of service, and notifying the manufacturer's service representative of required repairs if the repair cannot be completed by in-house personnel.

For all equipment or instrumentation under warranty, service contract, or requiring repair by an outside service, the proper outside service agency shall be contacted by the Laboratory Manager or designee.

All repair work performed is to be entered by the Laboratory Manager or designee in the equipment or instrument's maintenance logbook, is signed, dated, and includes a service report number where one is issued.

The Laboratory Manager or designee shall verify that all repair work has been properly completed.

A copy of all repair service reports generated by an outside service agency shall be placed in the equipment or instrument's record file that is maintained by the laboratory.

All repaired equipment and instrumentation shall be checked before reuse and recalibrated if required.

11.3 Equipment Selection, Cleaning, Calibration, and Use

Overall analytical system quality begins with the timely acquisition of reliable equipment to assure effective operations in the laboratory.

Clean Harbors will purchase equipment and supplies that meet or exceed the requirements of the analytical methods used. All supplies will meet or exceed the specifications set forth in the method or those from professional groups such as the American Chemical Society (ACS), American Society for Testing and Materials (ASTM), and the Association of Official Analytical Chemists (AOAC), where available and appropriate.

Equipment acquisition will be reviewed by the Laboratory Manager for the ability to meet the operating and quality assurance specifications of the analyses for which it is intended. Upon installation the equipment will be required to meet method specifications. Sufficient support and maintenance supplies will be incorporated into the implementation plan in order to ensure that the equipment is operational.

Records shall be maintained of each major item of equipment and all reference materials significant to the tests performed. These records shall include documentation on all routine and non-routine maintenance activities and reference material verifications.

The records shall include:

- The name of the item of equipment;
- The manufacturer's name, type identification, and serial number or other unique identification;
- Date received and date placed in service (if available);
- Current location (where appropriate);
- If available, condition when received (e.g. new, used, reconditioned);
- Copy of the manufacturer's instructions, where available;
- Dates and results of calibrations and/or verifications and date of the next calibration and/or verification;

- Details of maintenance carried out to date and planned for the future; and,
- History of any damage, malfunctions, modification or repair.

If a method specifies something other than what is listed below, then the method takes precedence over this QA Manual.

Balance

Laboratory balances will be calibrated and serviced by a certified metrologist. Balance masses will be certified annually by a calibration service certified to ISO Guide 25 / 17025. In addition, the balances will be checked daily with a minimum of two masses that bracket the range of interest. Weights must be ASTM Class 1,2, or 3 (or better) and should represent the range of interest used. Reference weights must be class 0 or 1. Results must fall within the manufacturer's acceptance criteria. A record of calibrations and daily checks will be kept in a balance logbook.

Wipe the balance and clean after each use.

Protect weights from corrosion and contamination.

pH Meter

The pH meter shall have an accuracy of at least ±0.1 units with readability of at least ±0.05 units.

Standardize with at least two standard buffers (typically pH 4.0, pH 7.0, or pH 10.0) before each shift the meter is used.

Check electrodes weekly. Fill if fluid is low and replace the electrode if cracked.

Water Deionizer

Monitor water for conductance daily if used to ensure it meets the requirements of the application. For example, the minimum conductance specifications for ASTM Type II are: Conductivity >1.0 μmho/cm as resistivity or <1.0 MΩ-cm at 25°C

Replace cartridges and filters as indicated by the equipment or analytical results (carbon filter at least every two months; final filter at least every three months).

Centrifuge

Check brushes and bearings for wear every six months. Replace as needed.

Safety Fume Hood

Regularly check filters or screens (if applicable) for plugging or obvious dirt accumulation. Clean or replace filter as needed (maximum lifetime ~ 12 months).

Check the hood for leaks and for rate of airflow according to the procedure specified in the Chemical Hygiene Plan (CHP).

Thermometers and Temperature Recording Devices

Thermometers and temperature recording devices are inspected and standardized as required, and may be subject to additional requirements in the individual methods. Each thermometer shall be verified annually, and digital reference thermometers shall be sent to NIST or an agency ensuring NIST traceability for the annual evaluation.

Record calibration checks. Mark calibration correction on each thermometer or on the outside of the incubator, refrigerator, or freezer containing the thermometer.

Record temperature checks on charts or in logbooks.

Refrigerator

Check and record temperature daily when used. Typically, standards refrigerators must be 4 ± 2° C. If outside the acceptance range, the refrigerator must be repaired or removed from service and the samples moved to a refrigerator within the range. Alternatively, if the excursion can be qualified through usage, the reasoning shall be documented (e.g. open door).

Clean monthly or as needed. Discard outdated materials in refrigerator on a regular basis.

Freezers

Check temperature and record daily when used.

Use of recording thermometer and alarm system are recommended.

The freezer must be uniquely identified.

Clean and defrost freezer as needed. Discard outdated materials.

Hot Air Oven

Check temperature and record daily.

The use of a recording thermometer and alarm system are recommended.

Gas, Liquid, and Ion Chromatographs

Perform background check and calibration to confirm resolution, sensitivity, and retention times as per the SOP on each method.

A GC oven should be capable of temperature programming and be equipped with accurate gas flow controls.

Perform ECD wipe test every 6 months (or as per applicable regulations) and file documentation for each detector.

Atomic Absorption Spectrophotometers

Clean lenses, burner, and nebulizer daily or as needed.

Measure sensitivity and calibrate with each use according to the SOP.

Inductively Coupled Plasma Atomic Emission Spectrophotometer (ICAP)

Flush the torch daily and clean as needed.

Change or clean the air and water filters as needed.

Change the oil in the vacuum pumps every six months if applicable.

Fixed and Variable Volume Pipettes – Microliter, with disposable tips

The accuracy of fixed volume pipettes must be verified quarterly. Record the average mass obtained by dispensing a minimum of three volumes of water. The pipettes must be verified to be within 2% of the set volume.

The accuracy of variable pipettes must be verified daily at the highest and lowest settings used. Record the average mass obtained by dispensing a minimum of three volumes of water. The pipettes must be verified to be within 2% of the set volume. However, frequency may be reduced to the minimum period between excursions in a quarter if the evidence is documented (e.g. weekly frequency may be used if the longest interval between excursions is 8 days). The frequency may not exceed one quarter.

Disposable pipette tips must be verified each lot. The pipettes must be verified to be within 2% of the set volume.

Dispensers

The accuracy of dispensers (e.g. repipettor) used for quantitative purposes must be verified quarterly. Record the average mass obtained by dispensing a minimum of three volumes of water or a liquid of known density. The pipettes must be verified to be within 2% of the set volume.

11.4 Maintenance Log

Maintenance log books should be kept for all of the major pieces of equipment described above, and include all non-routine maintenance or repairs performed by personnel.

12. Calculation of Data Quality Indicators

Following are the ways to evaluate data that has been generated by a test method. Each method SOP contains the data evaluation criteria for that method. A common usage is included with each one.

12.1 Accuracy

Percent Recovery

Accuracy can be expressed as the percent recovery of a sample spiked with a known amount of analyte. The most commonly applied use is in the case of a matrix spike and matrix spike duplicate but is also used in determining surrogate standard recoveries. The formula is:

R = (MSR)-(SR)/(MA) x 100%

Where:

R	=	% recovery
MSR	=	matrix spike result
SR	=	sample result
MA	=	matrix spike amount

Reference materials are essential to the evaluation of accuracy. Stock solutions for matrix spikes must be traceable to a source independent from the calibration solutions. Quality control check samples used for calibration verification will likewise be traceable to a source independent from the calibration solutions and may be from the same source as the spiking solutions. In those cases, QC results will be acceptable to use for accuracy assessments in addition to matrix spikes.

Percent Difference

Accuracy can also be expressed in terms of the percent difference between the result obtained from the analysis of a standard and the known or accepted value of the standard. This parameter is often used in assessing analytical accuracy through the analysis of calibration check standards (CCS's).

% D = (Observed – Known)/Known x 100%

12.2 Precision

Precision is established when more than two measurements are to be evaluated; the standard deviation is derived from the following equation:

$$S = \text{sqrt}\ \{\ \text{sum}(x_i - x_m)^2 / (n-1)\ \},$$

Where:
S = standard deviation
x_i = each observed value
x_m = aritmetic mean of observed values
n = total number of values

The precision of laboratory results will be expressed as the percent relative standard deviation (RSD) or relative percent difference (RPD).

RSD is obtained by dividing the standard deviation (S), by the mean (x_m), and expressing the ratio as a percent. This is commonly used in acceptance criteria of response factors (RF's) in an initial calibration curve.

$$RSD = S/x_m \times 100\%$$

RPD is derived from the absolute difference between duplicate results D_1 and D_2 divided by the mean value of the duplicates.

The common usage of this is for duplicate samples and matrix spike/matrix spike duplicates. RPD's are not calculated for duplicate samples that have a value less than 10 times the reporting limit.

$$RPD = |D_1 - D_2|/[(D_1 + D_2)/2] \times 100\%$$

The RPD derived from duplicates can be related to the statistic RSD by the following relationship. This applies for a large number of measurements.

$$RSD = 0.707 \times RPD$$

12.3 Treatment of Outliers

For the treatment of Quality Control data an outlier is a data point that is different from the main body or pattern of data. Any data point outside the control limits is to be evaluated for a transcription or mathematical error. If an error is found and can be corrected then all data generated in the analytical batch with that value are to be considered valid. If no error is found then the analytical data is inspected for errors and considered questionable and should be reanalyzed.

12.4 Determination of Method Detection Limit

All sample preparation steps must be included in the determination of the MDL. This procedure is intended for a wide application on many different methods and matrix types.

Different matrices may be chosen for the method MDL as long as the native concentrations of any target analytes being analyzed are not present at or above the predicted MDL. Each method SOP specifies the matrix to be used in calculating the MDL and the frequency of it be accomplished (no less then annually or when there is significant instrument maintenance).

12.4.1 Prepare in the matrix, a standard at 3 to 5 times the predicted MDL, of the compound or compounds. Take a minimum of seven aliquots of the standard and process them through the entire method. Analyze a method blank along with the seven replicates.

12.4.2 Calculate the results in accordance with the method. Calculate the standard deviation as outlined in Section 12.2.

12.4.3 The formula for the MDL is listed below. Use the appropriate number of significant figures for the method at low levels.

$$\mathbf{MDL = t \times S}$$

where: t = the students t value
S = standard deviation

Student's t value at 99% confidence level

Number of replicates, n	Degrees of freedom (n-1)	t(n-1), (1-α = 0.99
5	4	3.747
6	5	3.365
7	6	3.143
8	7	2.998
9	8	2.896
10	9	2.821

12.5 Method Control

Statistical evaluation of quality control results are used to determine method control, this is usually documented as a control chart or tabulation. The actual control limits based on lab data will be used for method control except in the instances where a regulatory method requires the use of explicit control limits. The control limit will be ± two standard deviations from the mean. Warning limits may be added to the control chart as a guideline indicating when the analysis is approaching the control limit. Occasionally interim limits of ± 20% are used until data can be generated and evaluated.

13. Corrective and Preventative Action

13.1 Introduction

Analytical measurements must conform to established quality control guidelines for the particular method in question (Each method SOP will specify when corrective action is required). When deficiencies and/or nonconformities to established guidelines are present, corrective action is necessary to bring the analytical process back into control. The initial objective of any corrective action is the identification of the problem and the determination as to whether the out-of-control event is transient or a systematic phenomenon. Additionally, corrective action involves investigation into the root cause, resolution of the problem, implementation of the solution, and documentation. If the root cause cannot be determined, documentation should be provided to support continuation of the process. If data is reported with associated deficiencies or nonconformities that may adversely affect the data, it is necessary to qualify the reported data. A complete corrective action includes monitoring the situation after a solution has been implemented to ensure that the solution remains effective.

Examples of corrective actions include:

- sample reanalysis,
- sample re-extraction/redigestion,
- instrument recalibration,
- instrument maintenance,
- resampling,
- additional staff training/instruction,
- modification and validation of methodology and associated written procedures (SOP),
- effective handling of (any) customer complaints,
- written follow-up to client and/or revision to client reports impacted by non-conforming analytical events,
- responses to external or internal audit findings and proficiency tests.

13.2 Corrective Action Process

Effective corrective action involves the following steps:

- identification or definition of the problem,
- evaluation of the significance of the problem i.e.; a determination of whether or not the problem requires documented specific corrective action,
- assignment of responsibility for investigating the problem,
- determination of the cause of the problem,
- selection of an appropriate corrective action,
- implementation of the corrective action,
- verification of the effectiveness of the corrective action,

- follow-up observation of permanency of the corrective action, where applicable,
- documentation of corrective action process.

13.3 Overview

Situations requiring corrective action will generally arise from deficiencies or nonconformities. A nonconformity or deficiency can be described as a lack of a quality characteristic or a significant deviation from an established requirement causing the analytical process to be out of control.

Typically, nonconformance is discovered during such procedures as sample receipt/management, preparation, analysis, standard QC procedures, data review, data validation, audits or proficiency tests, and client data review or feedback. Anyone involved in the analytical process or anyone overseeing or regulating the process may discover deficiencies or nonconformities. Once a problem has been detected, responsibility for resolving that problem must be assumed or delegated.

Significance of Nonconformance - Once a deficiency or nonconformity has been identified, a determination must be made as to whether or not the problem is significant to the analytical process. For example, an out-of-control analytical result may be due to a specific sample matrix and not to analyst error or instrument malfunction. In this case, the analysis is not considered out of control and corrective action is not needed, however, the reported data may need to be qualified.

Control limit exceedences, client complaints, data rejection, instrument malfunctions, and improperly preserved or stored samples are examples of deficiencies or nonconformities requiring documented corrective action. On-the-spot, simple corrective actions routinely performed by technicians and analysts are considered to be normal operating procedures and do not require specific documentation beyond notebook or bench sheet notations. In the case of instrument problems (control limit exceedences or instrument malfunctions), notations must be made on the instrument log and any samples run since the last control check must be re-run.

Responsibility - Generally, anyone who has identified a problem is responsible for initiating the corrective action process or reporting the problem to an immediate supervisor who assumes the responsibility. Several individuals may share the various phases of the corrective action but it is essential that all parties involved understand who is responsible for each phase. The Lab Manager should take responsibility for assuring that the phases of the corrective action are coordinated and take place in a timely fashion.

Detection of Nonconformance - When a significant problem is encountered, sampling or analysis should be suspended until the situation has been resolved. Method-specific problems are usually identified through the evaluation of quality control samples such as method blanks and laboratory control samples. Surrogates, laboratory duplicates, and matrix spikes that

exceed criteria may indicate an out-of-control situation but may also result from sample matrix interference (not requiring analytical corrective action). If an out-of-control analysis is identified, it is important that the problem be resolved as quickly as possible.

Cause - The corrective action identified may be quite obvious. The cause may be less obvious. Investigation into the cause of a significant problem is undertaken after the problem is defined. Research may involve the analytical method and an instrument manual. Additionally, consultation with the client, Lab Manager, or senior level management may be needed. However, should the cause be determined to be one requiring such long term actions as instrument overhaul or analyst retraining, the analytical process may be started up again with substitution of properly functioning equipment or sufficiently trained analysts. When serious problems or problems which will require long term corrective action arise, then management should be informed since their involvement in the corrective action process will be necessary.

Corrective Action - Once a significant problem has been defined and its causes identified, a corrective action must be determined (See section 13.1 for a list of commonly applied corrective actions). Some problems may require unique approaches. Analysts should work together to devise adequate solutions. The approach and solution must be recorded for significant problems.

Implementation - The selected corrective action is then implemented. It is the Lab Managers duty to assign responsibility for implementation.

Verification - Following implementation, the analyst should reanalyze or continue the analytical process to verify that the problem has been corrected.

Documentation - The selected corrective action is then documented and/or the reported data qualified; see Documentation section below.

Follow Up - Monitoring of subsequent analytical processes is needed to make certain that the solution is both successful and continuous. The Lab Manager or designee should perform the monitoring function beyond the immediate implementation period.

13.4 Procedure

The following steps are taken to complete the corrective action process. A corrective action form must be completed and given to the Lab Manager.

Reanalysis - In some cases simply reanalyzing the sample may resolve the problem. This may or may not involve some sample preparation. The sample should be scheduled for reanalysis. Additionally, any pertinent EPA, state, CH or project-specific quality control guidelines should be followed.

Re-extraction or Re-digestion - If a problem is believed to be the result of improper sample preparation, then repeating the preparation step (e.g., extraction, digestion or distillation) may remedy the problem. Other cases may also arise which require preparation of another sample (e.g., when a sample is totally consumed or lost during the analysis).

Recalibration - It is not uncommon for instruments to deviate from the original calibration or to show a drift from the original baseline. In such cases, the instrument should be recalibrated. If the integrity of the standards is in question, prepare new standards for the recalibration. If recalibration resolves the problem, all samples run (as listed on the instrument log) since the last calibration must be re-run. It must be noted on the instrument log that the samples are being re-run due to calibration problems. Sample analysis records must be updated after the samples have been re-run.

Instrument Maintenance - If an instrument malfunction has been detected, repair and/or maintenance procedures need to be initiated. Prior to performing any work on equipment, make sure that this will not void a warranty or service contract and make sure a supervisor approves it. In general, there are two types of maintenance and repair: in-house and external.

Operations manuals will generally contain sections on troubleshooting and repair which should be consulted for in-house work. In addition, these manuals will usually list a phone number to call for technical assistance. After any work has been performed on an instrument or piece of equipment, this work must be logged into an instrument/equipment maintenance logbook.

External maintenance and repair is usually covered by a service contract which should be consulted prior to placing a service call. As with in-house work, all external work must be documented and all paperwork obtained from the contractor should be retained and filed. The work order should be cited in the same maintenance logbook.

Re-sampling - If the sample is lost, destroyed, consumed, improperly sampled, preserved or stored, it may be necessary to resample. When re-sampling is required, the appropriate personnel should be notified as soon as possible so that re-sampling can be scheduled. The sampling process should adhere to the appropriate sampling standard operating procedure.

Additional Training or Instruction - An analyst or supervisor may determine that more training or additional instruction is required to achieve proficiency with the method(s). If an analyst believes that he/she is unprepared for an assignment, then the analyst should notify an immediate supervisor. Alternately, if a supervisor determines that an analyst lacks necessary skills, then the supervisor should schedule further training or instruction.

Other - Situations may arise that cannot be corrected by the above approaches, nor can every possible problem and solution be forecast or presented in this guidance document. Therefore, when cases arise that require special attention, use professional judgment and consult with the

Lab Manager. Ensure sufficient documentation is present to allow the corrective actions to be reproduced by another analyst.

13.5 Documentation

Deficiencies/nonconformities are documented on forms such as:

- Chain-of-Custody form,
- corrective action form,
- laboratory logbooks,
- raw data package,
- laboratory narrative (upon request), and
- analytical report.

Where applicable, the documented corrective action provides the means to:

- uniquely identify each finding (deficiency or nonconformity),
- state the nature of the finding,
- specify origination and due dates for corrective actions,
- identify the location where the finding was discovered,
- designate the personnel responsible for implementing the corrective action,
- record the corrective action(s) initially taken,
- address any additional action(s) needed,
- document effectiveness of the corrective action(s) through follow-up investigation,
- indicate the closure of a finding.

14. Quality Control Reports to Management

The facility General manager is given periodic reviews of the compiled quality control data, training completed, and other quality assurance issues. It is his/her responsibility to make sure the overall QA/QC policies of Clean Harbors as specified in the method SOP's are being implemented.

15. References

Chemical Hygiene Plan (CHP)
Hazard Communications Plan (HazCom)
Contingency Plan
SW-846 – "Test Methods for Evaluating Solid Waste, Physical/Chemical Methods"
ASTM D5058-90 - "Standard Test Methods for Compatibility of Screening Analysis of Waste"

4

SECTION 4

PROCESS INFORMATION

The information provided in this section is submitted in accordance with the requirements of OAC 3745-66-70 through 992. This section contains information about storage in tanks and in container storage areas, truck station areas, and processing. Process units used for waste recycling and reclamation operations at the Hebron Recycle Center are not subject to RCRA regulation, in accordance with OAC 3745-51-06.

4.1 GENERAL DESCRIPTION OF STORAGE AREAS AND ON-SITE OPERATIONS

4.1.1 Storage Areas and Truck Stations

Storage and processing operations at the Hebron facility take place in container storage areas and tank farms. Loading and unloading operations are performed at the truck stations. Exhibit 2 shows the location of the different units at the facility. This exhibit demonstrates the 50 foot set back requirements for these units. The following is a general description of those units.

Container Storage Areas

The Hebron facility has capacity to store 199,020 gallons of containerized hazardous wastes in Container Storage Areas No. 1, 2B, and 2E and Truck Stations 1 and 2. The capacity of Container Storage Area No. 1 is 158,400 gallons of hazardous wastes. Container Storage Area No. 2 has a total storage capacity of 14,220 gallons of hazardous wastes. Truck Stations Nos. 1 and 2 have alternate use as container storage areas with a storage capacity of 13,200 gallons of hazardous wastes each. The truck stations will still be used as truck stations, but sections can be segregated with booms or other devices for container storage. Table 4-1 in Attachment 4-6 summarizes the storage capacities for the different container storage areas.

Tank Farms

There are five tank farms at the Hebron facility, four of which (Tank Farms Nos. 1, 2, 4 and 6) are used for storage of hazardous wastes. The total capacity for storage of hazardous wastes is 1,237,500 gallons in 74 tanks and Solids Storage Bin #2. The tank schedule is presented in Tables 4-2 in Attachment 4-7.

Tank Farm No. 1, typically used for NFPA flammable waste solvents, has a storage capacity of 595,000 gallons of hazardous wastes in 30 tanks. Tank Farm No. 2, typically used for chlorinated waste solvents (NFPA combustible waste solvents), has a storage capacity of 525,000 gallons of hazardous wastes in 37 tanks. Tank Farm No. 3, typically used for chlorinated product storage, does not contain any permitted hazardous waste storage tanks and is not used for storage of hazardous wastes. Tank Farm No. 4, used for NFPA Combustible waste storage, has a storage capacity of 60,000 gallons in 4 tanks. Finally, Tank Farm No. 6, used to store still bottoms oil and waste solvents (NFPA flammable and combustible) for fuels blending, has a storage capacity of 57,500 gallons of hazardous wastes in 3 tanks and Solids Storage Bin #2. See Exhibits 26 through 35 and 57 for construction plans and details

Truck Stations

There are seven truck stations at the facility.

Truck Stations Nos. 1 and 2 are enclosed units (also known as Tanker Tunnels) which are used for loading/unloading operations of bulk liquid hazardous wastes. Each one of these truck stations has capacity for two tanker trucks. As indicated above, Truck Stations Nos. 1 and 2 have alternate use for storage of NFPA Combustible Class IIIB containerized hazardous wastes. Truck Stations Nos. 3, 6, and 7 are used for loading/unloading operations of containerized hazardous wastes. Truck Station No. 4 is used for loading/unloading of hazardous wastes at Tank Farm No. 4. Truck Station No. 5, which is covered by a canopy, may be used for loading/unloading of containerized hazardous wastes. Additionally, Truck Station No. 1 is used for loading of waste still bottoms oil into tanker trucks through a single 3 inch steel pipeline, which connects this Truck Station with Tank Farm No. 6, as shown on Exhibit 50.

4.1.2 Reclamation and Storage Activities

Currently, the reclamation processes include; two Washex Pot Stills (one of which has been temporarily removed for use at another facility), two Luwa Thin Film Evaporators, one Distillation Column, and four Safety-Therm Rotary Dryers. The following is an outline of the reclamation processes and storage activities, which are in operation or proposed at this Recycle Center:

Dry Cleaning Wastes Program

Containers of Dry Cleaning Process Wastes are brought in from service centers for the recycling process. Attachments 4-1 & 4-1A present a flow diagram of the process. The containers are off-loaded into a container storage area for visual inspection. There are three types of Dry Cleaning wastes, Dry Cleaner Bottoms, Dry Cleaning Filters and Dry Cleaner Naphtha. After waste receipt, the Dry Cleaning Filter wastes are fed into a shredder to reduce the size of metal and paper into small pieces, which in turn are fed through a hopper into the evaporator/dryer (Safety-Therm) to recover the solvent by evaporation. The Dry Cleaner Bottoms and Naphtha are dumped into the Dry Cleaner Jacuzzi Tank to separate out the solids, which are collected into drums and processed in the evaporator/dryer (Safety-Therm) to recover the solvent by evaporation. The liquid is pumped to a storage tank and eventually processed in into the evaporator/dryer (Safety-Therm) to recover the solvent by evaporation. In accordance with the Waste Analysis Plan, a sample of perchloroethylene will not be collected until after distillation. The residuals from the drying process are either sent to an approved facility for final disposition, or blended into a supplemental fuel for off-site energy recovery.

Spent Industrial Source Solvents Reclamation

The process for reclamation of spent industrial solvents is shown in Attachments 4-4 and 4-5. The facility accepts containers and tankers of spent industrial solvents which are stored in container storage areas and tanks, and will be processed by distillation. The types of solvent that will be recycled under the industrial source classification may be found in Table 3-2 in Section 3 of the application.

The processing equipment that may be utilized in recycling the industrial source waste streams may include a thin film evaporator, evaporator/dryer (Safety-Therm), vacuum still and/or

fractionation column. The matrix of the solvent to be recycled and the purity desired will determine which process equipment will be utilized.

The distillation bottoms oil is essentially hydrocarbon and is transported off-site or blended into a supplemental fuel for off-site energy recovery.

Fuels Program

Clean Harbors uses the Hebron Recycle Center to process and blend waste solvent/petroleum materials into fuels, which are transported off-site and sold as industrial furnace fuels. Materials for the fuels program may be obtained directly from containerized or bulk wastes, that have a minimum of 5,000 BTU/LB energy recovery value, received by the facility. Typically, wastes received containing more than 35 percent solids, and meeting all other fuel blending requirements, are transferred directly to the fuels program without processing for solvent recovery. Some containerized liquid and solid wastes may also be designated for the fuels program based on an analysis of the wastes and the intent of the customer. The materials that may be accepted as fuels are also described in Section 3.1 of this application. The waste codes that may be blended into fuel will typically be the D- characteristic and F- listed wasted streams that do not contain economically recoverable solvent. However, the facility may occasionally receive K- and U- listed materials to be fuel blended. Before any materials are fuel blended, compatibility with other materials already in the fuel tank(s) is verified in the facility laboratory. This compatibility testing is described in the Waste Analysis Plan. In addition, bottoms products from thin film evaporator, evaporator/dryer (Safety-Therm), vacuum still and/or fractionation are utilized in the fuels program. Attachment 4-5A shows a process flow diagram for the fuels program.

Wastes entering the fuels program are generally classified as pumpable, pourable, or non-pourable, based on their viscosity and solids content. Hebron will only receive and process pumpable wastes due to the current process capabilities of the facility. Pumpable containerized wastes are pumped into the permitted fuels storage and mixing tanks in a tank farm. Pumpable bulk wastes are also pumped directly to the permitted storage and mixing tanks.

Fuel materials are mixed and blended between tanks to adjust fuel parameters such as viscosity, water, solids, metal content, and heating value. No virgin materials are used. The blended fuels are pumped to the fuel storage tanks. The fuel storage tanks are usually agitated to maintain the solid materials in suspension. Fuel may be pumped through a final filter to remove coarse solid particles before being shipped in bulk to industrial fuel customers.

4.2 CONTAINERS

4.2.1 Description of Containers [OAC 3745-55-71 and 3745-55-72]

The container storage areas for waste materials are shown on Exhibits 23A through 24E. Container Storage Area No. 1 has a ramp area providing fork truck access. This area has two sumps and the aisle space requirement is observed.

Containers utilized for the handling of Dry Cleaning Process Wastes and Mineral Spirits Dumpster Mud are most often of 16 or 30 gallon capacity. The containers used for storage of this waste at the facility are typically 16 or 30 gallon steel drums, which may be new or reconditioned, and 16-gallon plastic drums. Containers utilized for the handling of paint gun cleaner are typically 5 gallon steel containers.

The industrial solvent waste material stored in containers consists of solvents listed as F001, F002, F003, F004, and F005, or solvents with EPA codes K and U. Containers typically

used for industrial solvent waste materials are 55-gallon containers. All waste is compatible with the containers in which it is stored.

All containers used for storage of hazardous wastes at the Clean Harbors Hebron facility meet DOT regulations in accordance with 49 CFR 178 and RCRA regulations for marking and labeling. All containers used to store hazardous waste at the facility, including any containers that are reused for on-site generated materials, will be inspected to ensure that they are in good condition (e.g., no severe rusting or apparent structural defects). If any container is not in good condition or begins to leak, the contents will be transferred to a container that is in good condition in accordance with OAC 3745-55-71.

4.2.2 Container Management Practices [OAC 3745-55-70 to 74 and 3745-54-35]

Container management generally falls into one of three categories: unloading, storage, and emptying. When a shipment of containers is received at the facility, it is unloaded from the truck trailer using a lift truck fitted with drum handling or pallet handling attachments. Containers are spread out in the drum staging area, areas 2D and 2C as shown on Exhibit 24C, so that individual drums are accessible for inspection and sampling. Containers are counted to ensure agreement with the manifest or shipping papers and inspected to ensure that the containers are structurally sound and are labeled in compliance with RCRA and other applicable regulations. The containers will be sampled and/or inspected using the procedures outlined in the Waste Analysis Plan (Appendix 3-1 of Section 3 of this permit application), to confirm that the wastes are suited for storage and processing at the Hebron Recycle Center. Containers may be staged in areas 2C and 2D for up to 24 hours before they must be moved to a permitted storage area. Areas 2C and 2D are ONLY used as staging areas .

After the waste analyses have been completed, containers are moved to a permitted container storage area designated by the facility management. Containers of waste are stored to await subsequent emptying to the process units or to a storage or blending tank. Containers are transported within the facility by trained personnel using lift trucks with drum handling or pallet handling attachments.

Containers in storage are kept closed with all head bungs secure, preventing evaporation of volatile materials from the containers (the solvents received at the facility are valuable product, and therefore, Clean Harbors minimizes opportunities for loss). Containers are stored upright, generally on pallets, but may be stored directly on the concrete pad, depending upon how they are received. Exhibits 23C, 24C, 40C, and 41D present arrangements of drums in Container Storage Areas No. 1 and 2 and in Truck Stations No. 1 and 2, respectively.

Containers in Storage Area 1 currently are stored on pallets and are stacked up to 12'0". In order to ensure compliance with this standard, a mark has been placed on building columns or walls in Storage Area 1 at the 12'0" elevation. Containers in storage areas 2B and 2E are stored on pallets and are stacked up to a maximum height of three drums. The minimum aisle space between rows of drums in the container storage areas is typically two feet, however, if the row width exceeds 20 feet, a four-foot wide aisle must be provided between rows. Containers are stored at least three feet from the edge of any dike not protected by a side wall. Additionally, clearance of at least three feet is maintained around all columns in the container storage areas. This arrangement allows unobstructed movement of personnel to ensure that all drums can be visually inspected. Two feet of aisle space will be maintained from the wall to the first pallet. The aisle space maintained ensures unobstructed movement of personnel for fire fighting purposes. The types of materials stored in each row are identified in the operations log maintained at the facility. Labels on the containers identify the contents, the accumulation date, and the contained wastes, associated hazards. Ignitable wastes may be stored in container storage areas 1, 2B, and 2E ONLY. Smoking is prohibited in the facility, which is posted with "No

Smoking" signs. Container storage areas are inspected daily, as described in Section 6. Among the items checked during the daily inspection are the condition and configuration of the waste containers, and the integrity of the secondary containment system. In the event that a leaking drum or other problem drum is identified during an inspection, Clean Harbors personnel will relocate drums and pallets from the drum row until the problem drum is exposed and can be worked on or removed. The maximum number of pallets in a row of drums will be twelve. Therefore, the time required to relocate drums that might obstruct access to a problem drum would typically be approximately 15 to 30 minutes, upon discovery.

Containers of wastes to be processed through the facility's recycling units or to be used in the fuels program are emptied by one of several procedures, depending on the characteristics of the waste material. Liquid waste material in containers may first be placed in permitted storage and then will be transferred into waste storage and mixing tanks in a tank farm. Wastes that are not pumpable are presently poured or manually removed from deheaded containers, depending on the viscosity and solids content of the material.

Liquids from minor drips and leaks in container storage and handling areas at the facility are covered with absorbent, which is used as a housekeeping sweeping compound in the storage areas. The used absorbent is then either put into the Safety-Therm process for recovery of the solvent or is sent off-site to an approved facility. Additional "chemical contact housekeeping wastes," including such items as used gloves, rags, and floor sweepings, may be placed in the same drums as the used absorbent.

Containers that are found to be leaking or in imminent danger of leaking are either opened and the contents transferred to another container, or are placed in overpack drums. The facility maintains a stock of overpack drums of sufficient size to hold a 55-gallon steel drum.

In the event of a spill of a large volume of waste inside a container storage area, emergency response procedures would be activated and the liquid will be removed from the containment area (procedures are described in the Contingency Plan in Section 7). Liquids will be removed from the containment area using equipment such as a portable pump or a vacuum truck. If possible, spilled liquids will be placed in a storage tank to await recycling through the facility's process units. Otherwise, the spilled liquids will be handled as a hazardous waste and sent off-site to an appropriate facility for treatment, storage, or disposal.

4.2.3 Secondary Containment System Design and Operation [OAC 3745-50-44(C)(1) and 3745-55-75(A) to (D)]

Table 4-3 in Attachment 4-8 summarizes the secondary containment capacities for all hazardous waste storage units. The secondary containment capacity of the Container Storage Areas is sufficient to contain ten percent of the volume of containers, as indicated in the calculations. In addition, all drums stored in the container storage areas will be stored at least three feet from the edge of the dike not protected by a vertical side wall, to prevent a leak from a stacked drum from spilling outside the containment area.

The secondary containment storage calculations for the different container storage areas are presented on Exhibits 23C, 24C, 40C and 41D. Clean Harbors has calculated the net secondary containment capacity for the maximum waste inventory for each individual storage area assuming that all the drums are placed on pallets. Additionally, Clean Harbors has calculated the maximum number of drums that can be stored in each individual storage area if the drums are placed directly on the floor. The option of storing drums directly on the floor provides operational flexibility.

Previous knowledge of the waste streams indicates that the core waste streams are compatible. However, certain proposed industrial waste streams waste codes may be deemed incompatible according to USEPA guidance (A Method for Determining the Compatibility of Hazardous Wastes, EPA-600 2-80-076, April 1980). Therefore, based on discussions with Ohio EPA, Clean Harbors will assume that the following waste codes are incompatible with other waste streams unless there is knowledge which demonstrates otherwise. Demonstrated knowledge will include: determination by the above mentioned guidance document, or receipt of the waste which is already commingled, or testing the waste stream. Testing of the waste stream will be conducted and documented, for each material profile evaluation statement (refer to example in Attachment 3 in Appendix 3-1), for each waste stream which can be stored without segregation.

Segregation of these waste streams will include, but is not limited to:

1. Separation, dike, berm,
2. Isolation of the waste with portable dike, berm. Isolation will follow the guidelines in section 6 for two foot aisle space, etc.

Container Storage Area No. 1 (see Exhibits 23A through 23C) is constructed of a reinforced concrete pad with twelve inch high curbs at the east and west ends, and variable height curbs along the north and south ends (six inch minimum in the middle and increasing as the elevation of the pad decreases). The concrete pad is reinforced with 6 x 6 No. 4 rods with a one sixteenth-inch per foot slope to direct the flow of any leakage or spillage to sumps located at the east and west ends of Container Storage Area No. 1. Each sump is twenty-four inches in diameter by two feet deep and has a capacity of 47 gallons.

Container Storage Area No. 2 (see Exhibits 24A through 24C) is constructed of reinforced concrete. Secondary containment capacity calculation for Storage Area 2B was determined by flooding the areas with water. Clean Harbors temporarily removed all containers and non-fixed equipment from Container Storage Areas No. 2B . The containment area was flooded with water using a hose connected to a meter. Water was added until it overflowed the containment area. Clean Harbors decided to use this procedure to determine the secondary containment capacity for Storage Area 2B because the floor surface in that area is irregular and calculations based on concrete details from the drawings are difficult.

The concrete floor in Container Storage Area 2E slopes to four floor sumps located throughout the storage area. The floor sumps are constructed of stainless steel with dimensions of 3'0" square by 3'0" deep. Therefore, each has a total capacity of 202 gallons, or a total capacity in storage area 2E of 808 gallons. Table 4-3 in Attachment 4-8 lists the storage capacity for Container Storage Area No. 2. Exhibit 9 shows the drainage and sewer systems at the facility and indicates the material of construction of the pipes in the system.

Truck Station 1 and 2 (see exhibits 40A through 41D) are constructed of reinforced concrete with an average curb height of 4 ½ inches. They are covered buildings. the floor slopes to a 43 cubic foot catch basin located in the center of the building. A 16 foot by 1 foot trench runs across each bay to the sump. The average depth of the trench is 4 inches.

The concrete pads are maintained in good condition, free of any gaps, holes or cracks. The structural integrity of the concrete pads will be maintained through daily inspections, and any necessary corrective action. Since the material used to fill cracks found in secondary containment areas can not be applied in cold weather, any cracks found when the weather is not conducive to repair will be filled once the weather is deemed acceptable (this will be noted on the

daily inspection sheets). Design details and materials of construction are presented in Exhibits 23A, 23B, 24A, and 24B as well as in the report included in Attachment 4-11. The concrete is compatible with the wastes stored on it.

4.2.4 Control of Run-on [OAC 3745-50-44(C)(1) and 3745-55-75(B)(4)]

Run-on is prevented from entering the Container Storage Area No. 1 by the presence of a concrete dike wall at the perimeter of the storage area, as shown on Exhibit 23A. This dike is higher than the surrounding grade, which slopes away from the dike to encourage drainage away from the area. Additionally, the floor elevation in Container Storage Area No. 1 is higher than the surrounding Grade. The area is covered by a roof.

Run-on into Container Storage Areas Nos. 2B and 2E is not probable since there is a concrete berm to keep the run-on away from the building, as shown on Exhibit 24A, Section A-A. These areas are within an enclosed building.

Run-on into truck station 1 and 2 is not probable since the driveway into and out of the buildings slopes upward to keep the run-on away from the building. These areas are within an enclosed building.

The loading bays have roof overhangs to keep the rainwater out of the warehouses.

4.2.5 Removal of Liquids from Containment System [OAC 3745-55-75(B)(5) and 3745-50-44(C)(1)]

Detection of liquids in the containment system is visual. A daily inspection is made of the containment systems and any accumulated liquids are noted. If any accumulation of solvent or waste liquids is detected, the liquids will be pumped into containers, within 24 hours when possible, using equipment such as a portable pump for eventual recycling or disposal.

A visual determination of the nature of the spilled liquid (e.g., oily sheen or two-phase layering which would indicate solvents) will initially be made. Spilled liquid of uncertain nature will be chemically analyzed prior to recycling or disposal. Methods described in Appendix 3-1 will be used for the analysis.

4.2.6 Test for Free Liquids [OAC 3745-50-44(C)(1)(b)(i)]

A paint filter test is performed, if necessary, to establish if free liquids are present. The test method used is EPA Method 9095, as indicated in Appendix 3-1.

4.3 TANK SYSTEMS

The storage tanks at the Hebron Recycle Center are used for a variety of purposes, including product storage, fuel blending, in-process materials storage and hazardous waste storage. Of these uses, the storage of hazardous wastes and fuel blending are the only uses that are regulated under RCRA.

The facility has capacity to store 1,237,500 gallons of hazardous wastes in 74 tanks and Solids Storage Bin #2. Management of bulk wastes generally involves storage of wastes as well as transfers to and from the truck stations and container storage areas. When a tanker loaded with waste is accepted at the facility, the manifest or shipping papers are examined to ensure that the waste matches the pre-shipment documentation and the contents are sampled, using the procedures discussed in the Waste Analysis Plan (Appendix 3-1 of this permit application), to confirm that the wastes are suited for storage and processing at the Hebron Recycle Center. Bulk

shipments of waste are accepted for processing through the facility solvent recovery and recycling operations or fuels program.

After the waste analyses have been completed, wastes in incoming tankers will be pumped to the permitted storage tank assigned by the facility management. On occasion, the contents of a tanker may be transferred directly to the process units. Transfers to and from tanker trucks will only take place if the tanker is located within a secondary-contained truck station. Tankers will be electrically grounded during transfer operations, which are observed at all times by a trained Clean Harbors employee, as discussed in Section 4.3.4. This observation ensures that tank overfills are prevented and that any spills or leaks from tanks or lines will be noted and immediately remedied. Tanks are equipped with level gauges, and sufficient freeboard is maintained to prevent overfilling of the tanks. Materials received and processed at the facility are viewed as valuable products; therefore, loss of the materials is minimized.

Material is transferred into and out of tanks using pumps. On occasion, materials may be circulated in and out of certain tanks to promote mixing, which can improve the homogeneity of the material. Material transfers are controlled by operators trained and skilled in chemical plant procedures.

In order to prevent ignition hazards in the tank systems, smoking is not allowed within the facility's gates, except for designated areas (such as the lunchroom). Also, all tanks are fitted with flame arrestors. Refer to Section 6.4 for more information.

4.3.1 Existing Tank System

Assessment of Existing Tank System's Integrity [OAC 3745-50-44(C)(2)(a)]

Table 4-2 in Attachment 4-7 shows the tank schedule for the facility. The schedule shows the identification number, the type, and usage of each existing tank. All permitted tanks are above ground and enclosed, and all process piping systems are also aboveground. The tanks have sufficient shell strength and are structurally adequate to fulfill the intended use. Exhibits 12 through 22 show tank dimensions, shell thickness, supports, foundations, and other information for the storage tanks.

Exhibits 26 through 35 show the design of the concrete containment structure for the tank farms. The containment capacities are designed to hold, at a minimum the entire contents of the largest tank in the tank farm plus a 25-year, 24-hour rainfall event. Table 4-3 in Attachment 4-8 shows the secondary containment system design capacity for each tank farm. Cone bottom and dish bottom tanks have skirts which support the tanks. These skirts are not sealed to the concrete secondary containment. In the event of a major leak, liquid will be able to fill the space beneath the tanks. Therefore, the area beneath the cone bottom and dish bottom tanks is counted in the containment volume calculations. The base of the tank farms is impervious and free of cracks and is sloped toward a sump(s). All accumulated liquids are removed in a timely manner and stored in a waste tank for processing and/or reuse. Tanks are designed for and constructed of materials compatible with each type of waste which the facility is permitted to handle.

The tanks are designed to API and NFPA codes. All tanks including in-process and product tanks meet engineering requirements for waste storage. The carbon steel tanks have an exterior finish consisting of a red oxide primer and a white industrial enamel. Some of the tanks are lined with baked phenolic resin (a thermosetting resin made by condensation of a phenol with an aldehyde) to minimize corrosion. The chlorinated solvent storage tanks are equipped with conservents (i.e., calcium chloride dryer vents) to remove any moisture that might enter the tanks. Table 4-2 in Attachment 4-7 indicates which tanks are lined. All of the tanks are vented directly to the atmosphere. Such vents are registered but do not require air permits.

Tanks and tank farms are inspected daily, as discussed in Section 6 of this permit application. Among the items included in the inspection are condition of the tanks; integrity of secondary containment systems; and condition of tank level gauges, high level alarms, and other ancillary equipment. Storage tank inventories are measured on a plant-wide basis each day. Operational inventories are measured each time material moves into or out of a storage tank, including transfer of materials into or out of a tanker, into or out of a production process, or into or out of another storage tank. An advance check on tank inventory is performed by the production supervisor to verify that there is available unused storage capacity remaining in the tank to receive the material being transferred.

Tank corrosion and erosion at the facility are managed via a preventative inspection and maintenance program. Tank shell thickness is measured ultrasonically every three years and kept on file at the facility. An example of the most recent shell thickness data is presented in Attachment 4-10.

Tank shell thickness measurements are taken by an inspector trained in the use of ultrasonic thickness gauges. The inspector is required to sign each report. After the inspector has filled out and signed the report on the thickness measurements of each tank, the report is sent to the Facility Manager. The Facility Manager then ensures that comparison of the measurements with previous test data for the tank are made to determine loss of metal thickness since the last test. Metal loss will be correlated with the time interval from prior tests.

Based on the recorded changes, the facility will enter any recommendations for work to be done on the tank onto the report form. The Facility Manager then forwards a copy of the report form to the corporate offices for approval to do the work.

Liquids from minor drips and leaks in the tank farms and truck stations are covered by absorbent, which is then swept up and deposited in drums. Additional "chemical contact housekeeping wastes," including such items as used gloves, rags, and floor sweepings, may be placed in the same drums as the used absorbent. These hazardous waste residues are accumulated on-site and either processed on-site or subsequently sent to an off-site approved facility.

In the event of a release of a large volume of waste inside a containment system, emergency response procedures will be activated and the liquid removed from the containment area (procedures are described in the Contingency Plan in Section 7). The spilled liquid will be removed from the containment area using equipment such as a portable pump or a vacuum truck. If possible, the liquids will be transferred to a storage tank to await processing through the facility's recycling units or blending in the fuels program. Otherwise, the material will be handled as a hazardous waste, and will be transported to an off-site treatment, storage, and disposal facility. Additional details on spill and emergency response equipment and procedures are provided in Sections 6 and 7 of this permit application.

Tank certification forms, reviewed and certified by an independent, qualified registered professional engineer as to the structural integrity and suitability for handling hazardous wastes of each tank system can be found in Attachment 4-10.

External Corrosion Protection [OAC 3745-50-44(C)(2)(e) and 3745-55-92(F)]

The corrosion and erosion potential, listed in the National Association of Corrosion Engineer Metals Survey, 1974, for the tanks are as follows:

Inside - Water reacting with material to form Hydrochloric Acid

Outside - Atmospheric Corrosion (Aboveground)

From the percent concentration in water versus temperature graph, Clean Harbors's used material has a temperature range between 65°F and 85°F. The corrosion potential for the halogenated solvents range from 2 mils/year at 100% concentration to 50 mils/year at 90% concentration in water (methylene chloride). Methylene chloride has the highest corrosion potential since it is the most soluble in water of the halogenated solvents.

The tanks should not be affected by atmospheric corrosion. To provide additional corrosion protection all tanks containing halogenated solvents are coated in the interior with a Plastic 3066 High Bake Phenolic Coating. This reduces any potential problem which could result from the moisture reacting with halogenated solvents to form hydrochloric acid. The tanks are inspected in accordance with the procedure and schedule outlined in Section 6.

4.3.2 Dimensions and Capacity of Each Tank [OAC 3745-50-44(C)(2)(b)]

Dimensions , capacity, and shell thickness of all tanks are provided in Exhibits 12 through 22, Exhibit 51, Tank Certification Forms in Attachment 4-10, and in Table 4-2 in Attachment 4-7.

4.3.3 Description of Feed Systems, Safety Cutoff, By Pass Systems and Pressure Controls [OAC 3745-50-44(C)(2)(c)]

Wastes are transferred to and from storage tanks through above ground piping. All transfers are monitored through a master control board which monitors the level in each tank and is equipped with alarm lights. Those alarm lights are tied to high level alarms in each tank, set at 95 percent of tank capacity. An operator who controls the transfer is present during all transfers to cease any feeds into a particular tank or system when signaled by an alarm or cutoff.

The design of each tank includes a continuous monitoring system. All tanks use level gauges, either mechanical float or ultrasonic. The mechanical system works by utilizing a float inside the tank that rises and falls with the liquid level inside the tank. The level inside the tank is then indicated on a readout on the outside of each tank. Each tank is provided with a high level alarm system. Whenever the high level alarm system detects that any specific waste storage tank is 95 percent full, all high volume pumps (i.e., pumps delivering more than 100 gallons per minute) that could possibly be feeding that tank are automatically disabled. Currently there are three pumps that qualify as high volume pumps with a pumping capacity of 250 gallons per minute, each. Whenever any high tank level is detected, an audible alarm is automatically sounded that can be heard throughout the entire plant, as well as in the administrative office. This system also provides for visual annunciation of high tank levels through a CRT display screen. The system also has a line printer, which makes a hard copy record of date and time when any tank goes into and out of the high level alarm condition. All high tank level alarms are connected to the alarm panel/operators terminal. Low volume pumps (i.e., pumping rate less than 100 gpm) do not require automatic waste feed cutoffs. The low volume pumps that are currently in use have a pumping rate of 10 or 25 gallons per minute. These pumps cannot be shutdown from the control room and will be manually shut off at the pump location. The operator will have ample time to shut off the low volume pump after the high level alarm sounds (response time is approximately two to three minutes), before the tank overflows. All of the tanks are vented directly to the atmosphere. Such vents are registered with the Ohio EPA-Division of Air Pollution Control, but do not require air permits. The tanks are vented through pressure/vacuum vents to release pressure (1/2 psi) or vacuum (0.75 oz/sq. in.). In addition, chlorinated organics storage tanks are equipped with conservation vents, which prevent influx of water, thereby minimizing the opportunity for Hydrochloric Acid generation.

During loading operations, a vapor balancing system is utilized between the source tank and the tanker truck being loaded. A pipe is used to transfer the product from the source tank into the tanker truck being loaded. Another pipe connects the top of the tanker truck being loaded to the top of the source tank. As the tanker truck is being filled, all the vapors which are displaced are transferred into the source tank, thus balancing the pressure in the system and preventing emission of those vapors to the atmosphere. During unloading operations the vapor balancing system is not implemented.

4.3.4 Diagram of Piping, Instrumentation, and Process Flow for Each Tank [OAC 3745-50-44 (C)(2)(d)]

Diagrams for all tank systems are provided as Exhibits 12 through 22 as well as Exhibits 36, 46A through 48F, and 54.

4.3.5 Tank Age Determination [OAC 3745-55-93(A)]

Tank age determinations are provided in Table 4-2 of Attachment 4-7. The year in which each existing tank was installed is indicated in the table.

4.3.6 Requirements for Secondary Containment and Leak Detection [OAC 3745-50-44(C)(2)(g) and 3745-55-93 (B) and (C)]

The tank farms are inspected daily by personnel trained for inspecting the tank systems, as described in Section 6. The daily inspections are documented in the Tank Farm Daily Inspection Checklist. In addition to inspecting the tanks, all above ground flanges, joints and connections, which are all welded connections, will also be inspected on a daily basis. Exhibits 26 through 35 show concrete construction details for the tanks' systems. Attachment 4-11 presents an evaluation of the concrete containment systems. This evaluation established that the concrete containment systems have sufficient strength and thickness to prevent failure.

Attachment 4-8 presents calculations for each tank farm's secondary containment system. The calculations demonstrate that the secondary containment capacity for each tank farm is sufficient to contain 100 percent of the volume of the largest tank within the tank farm, plus precipitation from a 25-year, 24-hour rainfall.

All existing secondary containment for tank systems has been constructed with backer rods in the expansion joints. A renewable seal has been poured over the backer rods in the expansion joints. These sealed joints are inspected daily so that the integrity of the seal is ensured through timely problem detection and repairs.

All tank secondary containment areas are coated with an impermeable exterior coating for concrete. The coating is impermeable and compatible with the wastes stored in the system. Specifications of a typical and representative coating are supplied in Attachment 4-9. The existing secondary containment areas are maintained in good condition, free of any gaps, holes or cracks. The structural integrity of these areas will be maintained through daily inspections, and any necessary corrective action. Since the material used to fill cracks found in secondary containment areas can not be applied in cold weather, any cracks found when the weather is not conducive to repair will be filled once the weather is deemed acceptable (this will be noted on the daily inspection sheets).

All equipment is aboveground and constructed of welded or flanged pipe which is inspected daily. Any leaks will therefore be detected and remedied within 24 hours, whenever possible.

4.4 OTHER UNITS

Clean Harbors has fourteen (14) tanks, listed in the table below, which are used for Fuel Blending. As such, they are considered hazardous waste treatment units per OAC 3745-58-45. All the information pertaining to these tanks can be found in section 4.3 above.

Tanks Authorized for Fuels Blending				
37 (T137)	45 (T145)	81 (T181)	82 (T182)	86 (T186)
87 (T187)	91 (T191)	95 (T195)	97 (T075)	98 (T248)
203 (T096)	204 (T101)	205 (T102)	209 (T103)	

Remediation is being conducted in the eastern part of the facility, as a result of a fire in 1985. This area is considered as a technical landfill, due to contamination levels, but was not used as a landfill during the life of the facility. Remediation on this area is being addressed with Ohio EPA. Further information about this project may be found in Sections 5, 9, and 10 of this permit application.

4.5 PROCESS VENT EMISSION CONTROL DEVICE

The emissions from vents on the process units used for waste recycling and reclamation operations at the Hebron Recycle Center are captured and processed through a Regenerative Fume Oxidizer (RFO). A RFO is a type of thermal oxidizer where heat from the exhaust flue gas is transferred to an inert solid media and then re-transferred to the inlet fume stream as a pre-heat operation. The effect on the system is to greatly decrease the firing of natural gas to maintain the destruction chamber operating temperature. The RFO is designed and operated to achieve 95% destruction of Volatile Organic Compounds (VOC's) and Hazardous Air Pollutants (HAP's).

ATTACHMENTS 4-1 THROUGH 4-3A

PROCESS FLOW DIAGRAMS

4-1 & 4-1A:	Dry Cleaning Waste
4-2:	Bulk Regulated Wastes (F001 through F005)
4-3:	Containerized Regulated Wastes
4-3A:	Fuels Program

ATTACHMENT 4-4

(TABLE 4-1)

CAPACITY OF CONTAINER STORAGE AREAS

FOR THE CLEAN HARBORS HEBRON, OHIO FACILITY

TABLE 4-1

CAPACITY OF CONTAINER STORAGE AREAS

STORAGE AREA	STORAGE CAPACITY	
	GALLONS	INDIVIDUAL UNIT CAPACITY (EQUIVALENT 55-GALLON DRUMS)
No. 1	**158,400**	**2,880**
No. 2 Total	**14,220**	**257**
B	6,150	111
E	8,070	146
Truck Station No. 1	**13,200**	**240**
Truck Station No. 2	**13,200**	**240**
TOTAL	**199,020**	**3,617**

NOTE: Secondary containment calculations are presented in Attachment 4-8

ATTACHMENT 4-5

(TABLE 4-2)

TANK SCHEDULE

FOR THE CLEAN HARBORS HEBRON, OHIO FACILITY

Table 4-2

TANK SCHEDULE
HEBRON, OHIO

Tank Farm	Tank Number	Capacity	Tank Type	Mixer	Current Usage	Year Installed	Permitted for Hazardous Waste
No. 1	30	10,500	CS-FB	No	Waste Water/Non-Hazardous Waste	1984	No
	31	10,500	CS-FB	No	Waste Water/Non-Hazardous Waste	1984	No
	32	15,000	CS-CB	No	Hazardous Waste	1986	Yes
	33	15,000	CS-CB	No	Hazardous Waste	1986	Yes
	34	15,000	CS-CB	No	Hazardous Waste	1986	Yes
	35	15,000	CS-CB	No	Hazardous Waste	1986	Yes
	36	15,000	CS-CB	No	Hazardous Waste	1986	Yes
	37	15,000	CS-CB	No	Hazardous Waste	1986	Yes
	39	15,000	CS-CB	No	Hazardous Waste	1986	Yes
	40	15,000	CS-CB	No	Hazardous Waste	1986	Yes
	41	15,000	CS-CB	No	Hazardous Waste	1986	Yes
	42	15,000	CS-CB	No	Hazardous Waste	1986	Yes
	43	15,000	CS-CB	No	Hazardous Waste	1986	Yes
	44	15,000	CS-CB	No	Hazardous Waste	1986	Yes
	45	15,000	CS-CB	Yes	Hazardous Waste	1986	Yes
	48A	7,500	CS-CB/PB	Yes	In-Process	1986	No
	48B	7,500	CS-CB/PB	Yes	In-Process	1986	No
	49	20,000	CS-FB	No	Product Storage/Hazardous Waste	1986	Yes
	50	20,000	CS-FB	No	Product Storage/Hazardous Waste	1986	Yes
	51	30,000	CS-FB	No	Product Storage/Hazardous Waste	1986	Yes
	52	30,000	CS-FB	No	Product Storage/Hazardous Waste	1986	Yes
	53	30,000	CS-FB	No	Product Storage/Hazardous Waste	1986	Yes
	56	15,000	CS-CB	No	Product Storage/Hazardous Waste	1986	Yes
	57	15,000	CS-CB	No	Product Storage/Hazardous Waste	1986	Yes
	58	15,000	CS-CB	No	Product Storage/Hazardous Waste	1986	Yes
	59	30,000	CS-FB	No	Product Storage/Hazardous Waste	1986	Yes
	60	30,000	CS-FB	No	Product Storage/Hazardous Waste	1986	Yes
	61	30,000	CS-FB	No	Product Storage/Hazardous Waste	1986	Yes
	63	15,000	CS-CB	Yes	Hazardous Waste	1986	Yes
	64	20,000	CS-CB-L	No	In-Process	1986	No
	65	15,000	CS-CB	No	Product Storage/Hazardous Waste	1986	Yes
	66	15,000	CS-CB	No	Product Storage/Hazardous Waste	1986	Yes
	67	30,000	CS-FB	No	Hazardous Waste	1986	Yes
	68	30,000	CS-FB	No	Product Storage/Hazardous Waste	1986	Yes
	69	30,000	CS-FB	No	Product Storage/Hazardous Waste	1986	Yes
No. 2	80	15,000	CS-CB	Yes	In-Process/Hazardous Waste	1986	Yes
	81	15,000	CS-CB	Yes	In-Process/Hazardous Waste	1986	Yes
	82	15,000	CS-CB	Yes	In-Process/Hazardous Waste	1986	Yes
	83a	7,500	CS-CB/PB	No	Hazardous Waste/In-Process	1986	Yes
	83b	7,500	CS-CB/PB	No	Hazardous Waste/In-Process	1986	Yes
	84a	7,500	CS-CB/PB	No	Hazardous Waste/In-Process	1986	Yes
	84b	7,500	CS-CB/PB	No	Hazardous Waste/In-Process	1986	Yes
	85	15,000	CS-CB	Yes	In-Process/Hazardous Waste	1986	Yes
	86	15,000	CS-CB	Yes	Hazardous Waste/In-Process	1986	Yes

Table 4-2

TANK SCHEDULE
HEBRON, OHIO

Tank Farm	Tank Number	Capacity	Tank Type	Mixer	Current Usage	Year Installed	Permitted for Hazardous Waste
No. 2	87	15,000	CS-CB	Yes	Hazardous Waste/In-Process	1986	Yes
	88	15,000	CS-CB	No	Hazardous Waste/In-Process	1986	Yes
	89a	7,500	CS-CB/PB	No	Hazardous Waste/In-Process	1986	Yes
	89b	7,500	CS-CB/PB	No	Hazardous Waste/In-Process	1986	Yes
	90	15,000	SS-CB	Yes	In-Process/Hazardous Waste	1986	Yes
	91	15,000	CS-CB	Yes	Hazardous Waste/In-Process	1986	Yes
	92a	7,500	CS-CB/PB	Yes	Hazardous Waste/In-Process	1986	Yes
	92b	7,500	CS-CB/PB	No	Hazardous Waste/In-Process	1986	Yes
	93	15,000	CS-CB	No	In-Process/Hazardous Waste	1986	Yes
	94a	7,500	CS-CB/PB	No	Hazardous Waste/In-Process	1986	Yes
	94b	7,500	CS-CB/PB	No	Hazardous Waste/In-Process	1986	Yes
	95	15,000	SS-CB	Yes	In-Process/Hazardous Waste	1986	Yes
	100	15,000	SS-CB	Yes	In-Process/Hazardous Waste	1986	Yes
	101	15,000	CS-CB-L	No	In-Process/Hazardous Waste	1986	Yes
	102a	7,500	CS-CB/PB	No	Hazardous Waste/Waste Water	1986	Yes
	102b	7,500	CS-CB/PB	No	Hazardous Waste/Waste Water	1986	Yes
	103	15,000	SS-CB	Yes	In-Process/Hazardous Waste	1986	Yes
	104	15,000	SS-CB	Yes	In-Process/Hazardous Waste	1986	Yes
	105	15,000	CS-CB	Yes	In-Process/Hazardous Waste	1986	Yes
	106	30,000	SS-FB	Yes	In-Process/Hazardous Waste	1986	Yes
	107	30,000	SS-FB	Yes	In-Process/Hazardous Waste	1986	Yes
	108	15,000	SS-CB	Yes	In-Process/Hazardous Waste	1986	Yes
	109	15,000	SS-CB	Yes	In-Process/Hazardous Waste	1986	Yes
	110	15,000	CS-CB	Yes	In-Process/Hazardous Waste	1986	Yes
	111	30,000	SS-FB	Yes	In-Process/Hazardous Waste	1986	Yes
	112	30,000	SS-FB	Yes	In-Process/Hazardous Waste	1986	Yes
	113	15,000	SS-CB	Yes	In-Process/Hazardous Waste	1986	Yes
	114	15,000	SS-CB	Yes	In-Process/Hazardous Waste	1986	Yes
No. 4	203	15,000	CS-CB	Yes	Hazardous Waste	1984	Yes
	204	15,000	CS-CB	Yes	Hazardous Waste	1984	Yes
	205	15,000	CS-CB	Yes	Hazardous Waste	1984	Yes
	206	8,000	CS-FB	No	Non-Hazardous Waste	Out-of-Service (Removed)	No
	207	8,000	CS-FB	No	Non-Hazardous Waste	Out-of-Service (Removed)	No
	208	10,500	CS-FB	No	Non-Hazardous Waste	1984	No
	209	15,000	CS-CB	Yes	Hazardous Waste	1984	Yes
No. 6	96	12,000	CS-FB	No	Hazardous Waste	Out-of-Service (Removed)	Yes
	97	20,000	CS-FB	No	Hazardous Waste	Out-of-Service (Removed)	Yes
	98	20,000	CS-FB	Yes	In-Process/Hazardous Waste	1989	Yes

Table 4-2

TANK SCHEDULE
HEBRON, OHIO

Tank Farm	Tank Number	Capacity	Tank Type	Mixer	Current Usage	Year Installed	Permitted for Hazardous Waste
	BIN #2	5,500	CS-SQUARE	No	Hazardous Waste	1992	Yes

CS = Carbon Steel

SS = Stainless Steel

PB = Piggy-Back

CB = Cone Bottom

FB = Flat Bottom

DB = Dished Bottom

L = Lined

ATTACHMENT 4-6

SECONDARY CONTAINMENT CAPACITIES

FOR THE CLEAN HARBORS HEBRON, OHIO FACILITY

(TABLE 4-3 AND CALCULATIONS)

TABLE 4-3

SUMMARY OF SECONDARY CONTAINMENT CAPACITY CALCULATIONS

UNIT/AREA	SECONDARY CONTAINMENT NET CAPACITY (GALLONS)*	FOR CALCULATIONS SEE EXHIBIT NO.
Container Storage Area No. 1	33,690	23C
Container Storage Area No. 2B	705	24D
Container Storage Area No. 2E	808	24D
Truck Station No. 1	5,382	40C
Truck Station No. 2	5,382	41D
Tank Farm No. 1E	62,588	**
Tank Farm No. 1W	73,958	**
Tank Farm No. 2	133,067	**
Tank Farm No. 3	121,768	**
Tank Farm No. 4	31,335	**
Tank Farm No. 6	23,952	**

All secondary containment net capacities are based upon containers being stored directly on the floor instead of on pallets since this results in a more conservative net volume. Areas 2C and 2D are processing area and not used for storage of hazardous wastes.

* Net Capacity = Total Capacity - Displacements

** The secondary containment calculations for the Tank Farms are presented in pages 4-8-2 through 4-8-8.

SECONDARY CONTAINMENT CAPACITY FOR TANK FARMS				
Tank Farm No.	Total Required Containment Volume (V_{req})[1] (Gallons)	Total Inside Height Required (H_{req})[1] (Inches)	Actual Wall Height (H_{act})[2] (Inches)	Net Containment Volume (V_{net})[3] (Gallons)
1E	27,017	10.36	24.0	62,588
1W	47,672	15.47	24.0	73,958
2	56,221	10.14	24.0	133,067
3	46,221	9.11	24.0	121,768
4	21,399	16.39	24.0	31,335
6	23,643	37.51	38.0	23,952

Notes:
1: From attached pages 4-8-3 through 4-8-8;
2: Based on concrete details from the corresponding Exhibits;
3: Area of Containment (Net) x $H_{act} = V_{net}$
Area of Containment (Net) x $H_{req} = V_{req}$
$V_{net} = V_{req} \times (H_{act} / H_{req})$

ATTACHMENT 4-7

SPECIFICATIONS FOR SECONDARY CONTAINMENT COATINGS

SEMSTONE® 245-TL

Specialty Novolac Epoxy Coating & Lining

SEMSTONE 245-TL is Sentry Polymers' highest performance novolac epoxy product for internal steel tank linings. SEMSTONE 245-TL is also ideally suited for coating structural steel where exposure to aggressive fumes exist and where there may be splash and spill of highly corrosive chemicals. It can also be used to protect concrete from chemical degredation and migration of hazardous solvents.

TECHNICAL INFORMATION

PRODUCT

SEMSTONE 245-TL is a 100% solids, flake filled, premium novolac epoxy coating. It is a two component system consisting of four parts by volume of Part A resin and one part by volume of Part B hardener. It is applied by plural component spray equipment, brush, and roller, typically at a total thickness of 30-to-40 mils in two coats and alternating colors for internal lining applications. Fiberglass mat may be added when conditions require a greater mil thickness.

SEMSTONE 245-TL is specially formulated to provide resistance to many extremely aggressive solvents, including some chlorinated solvents. It also has excellent resistance to chemicals typically handled by premium epoxy and other novolac epoxy products, making it ideally suited to handle mixtures of chemicals of various types often found in waste streams. It possesses minimal blushing characteristics and can be applied at substrate and ambient temperatures as low as 35°F.

GENERAL USES

SEMSTONE 245-TL is suitable for a variety of coating and lining applications including:

- Chemical Storage Tanks
- Wastewater Clarifiers
- Plating Vats
- Structural Steel
- Equipment Supports
- Catwalks
- Oil Storage Tanks
- Secondary Containment
- Process Floors
- Pump Bases
- Tank Foundations

HANDLING CHARACTERISTICS

SEMSTONE 245-TL may be applied using a spray rig as directed by the manufacturer. Sentry Polymers recommends using a plural component rig when spraying neat (unfilled) material. This product may also be applied using a notched trowel, serrated squeegee, brush or roller.

Depending on expected service conditions (i.e.: chemical exposure, temperature, immersion service vs. splash and spill, etc.), application thickness may vary. Consult Sentry Polymers for specific thickness recommendations.

TYPICAL PROPERTIES - WET

Solids by Volume:	100%
Weight per Mixed Gallon:	10 lbs
Pot Life @ 75°F:	15 min
Primer:	(consult Sentry Polymers)
Flammability:	Nonflammable

Cure Time (approximate):

Temperature	Firm	Chemical Service**
35°F	24 hrs	7 days
55°F	8 hrs	48 hrs
80°F	4 hrs	24 hrs

**For immersion service in chlorinated solvents, the coating must be post cu

TYPICAL PROPERTIES - CURED

Color:	Buff & Off White
Hardness - ASTM D-2240 Shore D: Neat:	80
Tensile Strength - ASTM D-638: Reinforced:	8,000 psi
Flexural Strength - ASTM D-790: Neat:	11,000 psi
Reinforced:	14,000 psi
Flexural Modulus of Elasticity - ASTM D-790: Neat:	8.2 psi x 10^5
Reinforced:	9.4 psi x 10^5
Bond Strength - ASTM D-4541: Concrete:	FAILURE IN CONCRETE
Steel:	1,700 psi

Sentry POLYMERS
5500 E. HWY 332
FREEPORT, TEXAS 77541
409-233-0312
800-231-2544

PACKAGING & STORAGE

SEMSTONE 245-TL is packaged in 1-quart, 1-gallon, 4-gallon, and 20-gallon units.

Each unit consists of a pre-measured Part A component and a pre-measured Part B component.

Keep SEMSTONE 245-TL tightly sealed in its original containers until ready for use. Store at 50-to-75°F, out of direct sunlight. Properly stored, SEMSTONE 245-TL has a minimum shelf life of one year. Refer to the batch number on the label for date of manufacture.

BID SPECIFICATION GUIDE

Use SEMSTONE 245-TL 100% solids, high functionality novolac epoxy coating/lining system as manufactured by Sentry Polymers, Freeport, Texas.

Apply SEMSTONE 245-TL at the specified thickness. Refer to the coating manufacturer's most currently published bid specifications, product and application literature for technical and application information.

For specific system applications using this product, refer to applicable Sentry Polymers Specification Guidelines.

APPLICATION GUIDELINES

JOBSITE ENVIRONMENTAL CONDITIONS

1. Consider the following when scheduling a system application:

   - Weather conditions, and especially dew point, should be constantly monitored in light of the work being done.
   - Final blast cleaning and application of the lining system must only be performed when it is clear the temperature of the steel substrate will not fall within 5°F of the dew point. Dehumidification and/or temperature control may be necessary to meet this requirement.
   - Use a surface thermometer to frequently monitor the temperature of the steel substrate.

JOBSITE STORAGE OF MATERIALS

1. Proper storage of Sentry Polymers products is essential to their performance. Follow these general storage procedures:

   - Store components (Part A and Part B) unopened, in a dry place, at 50-to-85°F, out of direct sunlight, and protected from the elements. Keep away from heat and flame.
   - For the 24-to-48 hours just prior to use, narrow the storage temperature to 70-to-85°F to facilitate ease of mixing.

SURFACE PREPARATION

1. Immediately prior to application of the coating or lining:

   - The steel substrate must be clean of all oil, grease, dirt, dust, mill scale, rust, flash rust, corrosion products, salts, solvents, chlorides, other chemicals, and existing coatings.
   - All welds must be smooth and continuous; no skip welds.
   - All weld splatter, buckshot, laminations, and slivers must be removed and ground smooth; undercuts and pinholes must be ground smooth and filled with weld metal.
   - All projections, sharp edges, high points and fillets must be ground smooth to a radius of at least 1/8 inch and all corners must be likewise rounded.
   - All pitting, gouges, scratches, and other defects must be repaired either by welding or by filling with repair materials that are compatible with the coating or lining system and suitable for the intended service conditions.
   - All surfaces to be coated or lined must be readily accessible.
   - For interior tank linings, the steel must be blasted to a White Metal Finish (NACE No. 1, SSPC SP 5) with a 2-to-4 mils dense, sharp anchor profile free of peening, as measured by ASTM D 4417.
   - For exterior coatings, the steel must be blasted to a Near White Metal Finish (NACE No. 2, SSPC SP 10) with a 2-to-4 mils dense, sharp anchor profile free of peening, as measured by ASTM D 4417.
   - Defects exposed by blasting must be repaired.

2. Refer to Sentry Polymers separate document "Surface Preparation - Steel" for instruction in the preparation of steel surfaces to accept a Sentry Polymers protective lining system.

MASKING & PROTECTION

1. Mask or remove adjacent surfaces and equipment that are not to be lined. Sentry Polymers coating and lining materials are difficult to remove, once applied.

2. Protect nearby pumps, motors and other equipment from spent abrasive venting from the tank during blasting.

APPLICATION EQUIPMENT

SEMSTONE 245-TL may be applied using a spray rig, notched trowel, serrated squeegee, brush or roller.

1. Spraying SEMSTONE 245-TL

   - Use a plural component airless spray rig such as a Graco "King" Hydro-Cat or equal. Refer to Sentry Polymers separate document "Equipment Specifications" - Section 397-250 for further guidance.

2. Always use spray equipment in accordance with manufacturers instructions.

3. Care of Spray Rig Hoses

   - Take care to prevent the mixed material from setting up in your hoses. For best results, keep your hoses as short as possible, purge them immediately if work is interrupted, keep them out of direct sunlight and insulated from hot surfaces.

IMPORTANT NOTES

PLAN AHEAD: Before mixing begins, carefully review the procedures for applying your system.

MIXING TECHNIQUE: We recommend using Jiffy type mixers for all mixing and stirring. When operating the mixer avoid plunging it up and down in the bucket. This can fold air into the resin, which may cause bubbles to form in the coating after it has been applied.

WORKING TIME: The working time for mixed material is short. If work is delayed, immediately flush the whip hose and gun. Refer to the applicable product Technical Bulletin for working times.

1. The following tips may help maximize your working time and protect your spray rig:
   - The warmer the components are when mixed, the shorter the working time will be. But, Sentry Polymers lining materials should be at least 80°F to spray properly.
   - Never mix more material than can be comfortably sprayed out within the working time.
   - If possible, shade the spray rig.
   - Keep hoses as short as possible; keep them out of direct sunlight and insulated from hot surfaces; purge them immediately if work is interrupted.
   - The lining materials are packaged in pre-measured kits. For optimum performance, kits should not be broken.

2. Stripe all continuous welds and edges with a brush-coat to assure adequate protection of these areas.

3. All spot welds should be caulked before applying final coats. Refer to job specifications and/or Sentry Polymers for caulk material recommendations.

Note: Use a wet-mil gauge to frequently monitor lining thickness.

MIXING & APPLICATION

1. Individually stir each separate Part A and Part B component to a smooth, uniform consistency and color. Any sediment in the container must be thoroughly scraped up and redispersed.

2. If using a plural component spray rig, skip this step. Otherwise:

   a. Pour the entire contents of Part B into the container holding the Part B, and mix thoroughly for 2-minutes.

      - The pot-life of the mixture will be approximately 45-to-60 minutes at 75°F (significantly less at elevated temperatures).
      - The longer the material is in the bucket after mixing, the shorter its pot-life will be. Use it immediately.

3. If applying with a plural component spray rig:

   a. Pour the pre-mixed Part A and Part B components into their appropriate hoppers on the rig. Recirculate the separate components through their hoses until both reach the correct working temperature. Part A should be at 110°F, and Part B should be at 100°F.

4. Apply the SEMSTONE 245-TL at the specified mil thickness and allow to cure.

Note: Post curing may be desirable in certain circumstances. Check With Sentry Polymers.

TOUCH-UP OR RECOATING

Before any touch-up or recoat material can be applied, the first coat must be properly prepared for intercoat adhesion.

1. The first coat must be cured firm to the touch. Coating on floors must be able to support foot traffic.

2. Scrub the first coat with soap and water and thoroughly rinse and dry it.

   - If the first coat cures more than 24-hours, lightly sand or mechanically abrade the surface after scrubbing it down with soap and water.

3. Any surface to be touched up or recoated should be protected. When the recoat material is applied, the surface must be dry and free of all dirt, dust, debris, oil, grease and other contamination.

CLEANUP

The following tips will be helpful in cleaning hand tools and equipment after use.

- Before Sentry Polymers coating and lining materials gel, they can be cleaned from hand tools and equipment using hot, soapy water.
- Spray equipment should be cleaned before coating and lining material begins to gel.
- Follow equipment manufacturer's recommendations for proper cleaning and care instructions.
- After Sentry Polymers coating and lining materials gel, xylene or MEK will be required for cleaning. Chlorinated solvents may be used if flammable solvents are not allowed.

JOB SPECIFIC MODIFICATIONS

These guidelines assume optimal jobsite conditions.

Differing conditions may necessitate alternate procedures. Common reasons for modifications include higher temperatures, lower temperatures, moisture at the jobsite, the condition of the substrate, restricted access to the work area, and tight project deadlines.

We urge you to contact the Sentry Polymers Technical Service Department for additional assistance.

SAFETY PRECAUTIONS

FOR INDUSTRIAL USE ONLY.

When using SEMSTONE 245-TL, be aware of these safety precautions:

- Avoid contact with eyes and skin.
- Do not ingest or inhale.
- Always wear chemical goggles, rubber gloves, and appropriate work clothing.
- Make provisions for forced ventilation when working in a confined area.
- Wear fresh air hood when spraying in confined area.
- Wear fresh air hood or an organic mist respirator when spraying in an open area.
- Prolonged or repeated exposure to the mixed material or the unreacted Part A and Part B components may cause skin irritation or allergic reaction.
- Refer to material safety data sheets (MSDS) regarding individual components.

Warranty

For one year following sale, SENTRY POLYMERS, Freeport, Texas ("SENTRY") will replace any of its products that do not conform to its manufacturing standards or, at its sole discretion, refund the proportionate sales price applicable to the nonconforming goods. Replacement product will be supplied at no charge, and FOB SENTRY'S facilities.

Information and suggestions supplied by SENTRY, whether in its published literature or otherwise, including samples, are believed to be accurate and reliable and are furnished in good faith. Such information and suggestions are supplied without charge and their use, and the use of SENTRY products is beyond SENTRY'S control. SENTRY'S products, information and suggestions are intended for USERS possessing skill and know-how in the industry. USERS are responsible, at their sole discretion and risk, to satisfy themselves regarding the suitability of SENTRY'S products, information and suggestions for their particular circumstances.

SENTRY MAKES NO OTHER WARRANTIES, EXPRESS OR IMPLIED, CONCERNING ITS PRODUCTS, INFORMATION AND SUGGESTIONS AND DISCLAIMS ALL WARRANTIES INCLUDING ANY IMPLIED WARRANTIES OF MERCHANTABILITY OR FITNESS FOR A PARTICULAR PURPOSE.

SENTRY'S obligation under this limited warranty will be rendered null and void by any one or more of the following: SENTRY is not paid timely and in full at Freeport, Texas, for all goods and services sold by SENTRY for use on the applicable project; USER does not cooperate with SENTRY'S reasonable investigations regarding the alleged nonconforming product; the product has been misused, abused or improperly maintained.

The provisions of this warranty supersede any provisions to the contrary in any of USER'S forms or documents or otherwise unless such contrary provisions are specifically acknowledged and agreed to in writing by SENTRY after receipt by SENTRY. SOME STATES DO NOT ALLOW THE EXCLUSION OR LIMITATION OF PERSONAL INJURY, INCIDENTAL OR CONSEQUENTIAL DAMAGES, SO THE ABOVE LIMITATION OR EXCLUSION MAY NOT APPLY TO YOU.

CHEMTEC INTL

Better Chemistry Produces Superior Products

General Offices
7771 Woodstone Drive
Suite 100
Cincinnati Ohio 45244
(513) 474-2090 Voice 474 2054 Fax
E-mail j. sist@worldnet.att.net.

CHEMTEC ONE

A MULTI-COMPONENT STATE OF THE ART PROCESS
For

High Performance Hardening, Dust Proofing, Sealing, Densifing

&

Protecting

of your Commercial & Industrial Concrete Floors

and all Concrete Infrastructures.

"THE ULTIMATE CONCRETE PROTECTION"

CHEMTEC INTL

Better Chemistry Produces Superior Products

General Offices
7771 Woodstone Drive
Suite 100
Cincinnati Ohio 45244
(513) 474-2090 Voice 474 2054 Fax
E-mail j. eist@worldnet.att.net

CHEMTEC ONE

HIGH PERFORMANCE PROTECTION FOR YOUR INDUSTRIAL AND COMMERCIAL CONCRETE FLOORS & CURING, HARDENING & DENSIFING OF ALL CONCRETE INFRASTRUCTURES, INCLUDING BRIDGES, ROADS, PARKING FACILITIES, RUNWAYS, LOADING RAMPS AND MORE.

CHEMTEC ONE is a MULTI-COMPONENT STATE OF THE ART process used for superior concrete protection, that is, a proprietary blend of reactive silicates plus surface active agents, which penetrates into the concrete and react with the free calcium and lime to form an insoluble material that closes the porosity, increases the mass, strengthens hardens and seals the concrete, makes it much more durable and resistant to damage by chemicals and mechanical abrasion.

The process is non-toxic, non-hazardous, non-flammable. There are no special handling requirements under environmental regulations and contains ZERO% VOC content.

CHEMTEC ONE is designed primarily to protect, harden, dustproof, increase the mass the durability and abrasion resistance of your high strength steel troweled concrete floors and to increase the useful life of all concrete infrastructures. Do not use on porous concrete blocks or other porous material where their are actual holes in the material.

Upon application the CHEMTEC ONE penetrates into the concrete forming a solid by-product in the gel pours, decreasing the porosity and increasing the mass of the concrete thereby increasing the surface hardness and strength. The process stops solids and liquids from penetrating into the concrete, but does allow air molecules to flow freely through the concrete and thus allowing the concrete to "breathe".

CHEMTEC INTL

Better Chemistry Produces Superior Products

General Offices
7771 Woodstone Drive
Suite 100
Cincinnati Ohio 45244
(513) 474-2090 Voice 474 2054 Fax
E-mail j. rist@worldnet.att.net

THE BASIC BENEFITS:

CHEMTEC ONE is a MULTI-COMPONENT STATE OF THE ART PROCESS that produces the following results in **two application on brushed finished concrete** and usually just **one application on steel troweled surfaces,** by just spraying it on the concrete and letting it dry.(see application method) Steel troweled floors will normally develop a sheen over time.

CURING OF NEW CONCRETE:

The process is extremely effective in stopping moisture loss in fresh concrete by applying the process to the concrete as soon as possible after the finish troweling operation (as soon as the concrete is firm and dry enough to walk on with out marking), saturating the surface with the product. The product immediately reacts with the free lime, produces a by-product that closes up the pours there by trapping the moisture in the concrete and greatly slowing the rate of evaporation. CHEMTEC ONE can be used as a curing agent and surface hardener on most concrete surfaces. This product is extremely effective at stopping moisture loss in fresh concrete, but does not meet ASTM C-309. DO NOT APPLY TO TOTALLY WET CONCRETE:

HARDENING, DUST PROOFING AND SEALING OF CONCRETE :

Unlike some other sealers the CHEMTEC process actually produces a chemical reaction that creates an insoluble by-product that encapsulates the calcium component of the concrete. It increases the mass and surface hardness of the treated concrete thereby making it much more resistant to wear and damage. Because of this chemical reaction the pours of the concrete are filled with this by-product and the porosity of the concrete is greatly reduced, not allowing liquids or solids into the concrete thereby sealing out the contaminates.

USES:

A unique state of the art product designed for use on dense high strength new and existing steel troweled commercial concrete floors. Primary use is for inside buildings where the objective is to densify, harden, dust proof and seal the floors. **CHEMTEC ONE** can be used to harden, densify, seal and increase the mass of any concrete infrastructure, such as airport runways and taxiway's, parking facilities, bridges, roads, loading ramps, fueling areas and many other uses. **CHEMTEC ONE** is designed to deeply penetrate and protect outside concrete infrastructures and is installed after the concrete is fully cured. **NOTE:** CHEMTEC ONE cannot be used for deep penetrating protection later if has been used to cure the concrete initially.

General Offices
7771 Woodstone Drive
Suite 100
Cincinnati Ohio 45244
(513) 474-2090 Voice 474 2054 Fax
E-mail j. sist@worldnet.att.net

TEMPERATURE LIMITS: Applications in temperatures up to 95° F and as low as 38° F. Concrete must not be allowed to freeze for 3 days after application. **DO NOT ALLOW THIS PRODUCT TO FREEZE.**

SURFACE PREPARATION:
Freshly poured concrete: NONE
Existing concrete: Clean all surfaces so that they are water permeable. Strip off coatings, sealers, paint or anything else that would prevent the CHEMTEC process from penetrating into the concrete. The concrete must be completely dry before you apply the application except where it is used as a curing medium. Use CHEMTEC high performance concrete cleaner to clean and degrease floors prior to treating the concrete with CHEMTEC ONE.

COVERAGE:
On steel troweled industrial floors the anticipated coverage is approximately 175 to 250 square feet per gallon, and on brushed finish concrete anticipated coverage is 100 to 150 square feet per gallon for each application. Actual coverage will depend on the porosity and temperature of the concrete being treated. It takes two applications to properly protect your porous concrete, and generally only one application on steel troweled surfaces .

MIXING REQUIREMENTS:
NONE: CHEMTEC ONE comes pre-mixed and ready to use.

COLOR / CLEAN UP METHOD:
Clear / Clean up with soap and water immediately after use. **CAUTION**: Leaving residue in spraying equipment may damage equipment.

DRYING TIME:
4 hours. Surface may be used as soon as it is completely dry. Do not get surface wet for 12 hours. If used as a curing medium observe normal loads for new concrete.

CURING TIME:
CHEMTEC ONE starts curing immediately and reaches it full cure in about 75 days. Surface can be used as soon as it is completely dry.

APPLICATION METHOD:
Apply by spraying on the surface, saturating the surface. Keep material from puddling, if necessary by spreading it around bristle brooms. Areas that puddle should be brushed over to dryer areas, areas that dry prematurely should have more material pushed to it or be re-sprayed . After the material has been on the steel troweled floor for 35 to 45 then squeegee off the surface. On brushed finished surfaces, just let it dry(see installation & instruction manual for details).

CAUTION! <u>DO NOT</u> ALLOW AREAS TO PUDDLE, AS THEY WILL LEAVE A HARD WHITE CRYSTAL ON THE SURFACE WHEN DRY.

General Offices
7771 Woodstone Drive
Suite 100
Cincinnati Ohio 45244
(513) 474-2090 Voice 474 2054 Fax
E-mail J. slat@worldnet.att.net

TOOLS NEEDED:
Low pressure sprayers such as Chapin model # 1352 with a 1 gallon per-minute nozzle, bristle brooms, squeegees, safety equipment and so on.

STORAGE LIFE:
Up to 6 months. **Do not allow product to freeze** or be stored in temperatures above 120° F or below 38° F. Agitate barrel if stored for periods over 3 months

CAUTION:
DO NOT store in aluminum containers or use spraying equipment with aluminum fittings. Product may react with the aluminum to create flammable hydrogen gas. See MSDS sheet. DO NOT spray or splash on glass, painted surfaces or decorative fronts as product may stain these surfaces. If you do splash the product on these surfaces wipe off with fresh water immediately.

TECHNICAL DATA:
For complete information please see the Material Data Safety Sheet "MSDS" and the CHEMTEC ONE installation and procedure manual, available upon request.

LIMITED WARRANTY:
CHEMTEC INTL will warrant our products to be of good quality and that a properly prepared and structurally sound concrete surface treated with CHEMTEC ONE formulation in accordance with the manufactures directions will remain dustproof, hardened and protected for a minimum period of two years. If after the specific treating period the surface does not remain dustproof, hardened and protected from penetration by liquids. CHEMTEC INTL will supply at its own expense sufficient CHEMTEC ONE to retreat the defective surface. This warranty does not apply if the CHEMTEC ONE is improperly applied or if structural faults occur due to poor workmanship, improper design, failure of other materials used in the project. The CHEMTEC ONE formula must be used before the end of the 6 month shelf life expires. Satisfactory results depend not only upon quality products but also upon many factors beyond our control. Therefore except for such replacement CHEMTEC INTL MAKES NO WARRANTY OR GUARANTEE EXPRESSED OR IMPLIED, INCLUDING WARRANTIES OF FITNESS FOR A PARTICULAR PURPOSE OR MERCHANTABILITY, RESPECTING ITS PRODUCTS, and CHEMTEC INTL shall have no other labilities with respect thereto. Any claim regarding product defect must be received in witting within 90 days of the date of defect during the warranty period. User shall determine the suitability of the products for the intended use and assume all risks and liability in connection therewith.

CHEMTEC INT'L

Better Chemistry Produces Superior Products

General Offices
7771 Woodstone Drive
Suite 100
Cincinnati Ohio 45244
(513) 474-2090 Voice 474 2054 Fax
E-mail j. aist@worldnet.att.net

SYNOPSIS OF LAB TEST:

ASTM C-672	NO SCALING
Cycles	100 with 2% sodium chloride solution
Absorption	Less than 1% after 48 hours / Less than 2% after 50 days.
Chloride Absorption	Specimen#1= 0.081% Specimen #2=0.056%
Dry Time	
To Touch	4 hrs
Dry Hard	12 hrs
Color	Clear
Specific Gravity (H_2O = 1)	1.04
VOC, grams / liter	0
pounds / gallon	0

Abrasion Resistance Treated vs Non-Treated Specimen ASTM C-779
Continuous rotating grinding disk under pressure for 60 minuets.
Abrasion Resistance Increase @ 30 minuets 45% wear in. 0.044 vs 0.080
Abrasion Resistance Increase @ 60 minuets 13% wear in. 0.097 vs 0.111

CHEMTEC ONE

Manufactured by

CHEMTEC INT'L

Cincinnati Ohio

(Member CSI)

"THE ULTIMATE CONCRETE PROTECTION"

CHEMTEC ONE

Installation instruction for CHEMTEC ONE concrete protector.

CHEMTEC ONE is a proprietary blend of water diluted and carried reactive silicates and surface active agents... concrete treatment that penetrates the concrete's permeable zones producing a solid, insoluble, irreversible reaction products residing in the gel pores.. dramatically reducing porosity of the concrete...increasing adhesion qualities...maintaining the concrete's ability to breathe...chemically protecting, stabilizing and strengthening concrete.
CHEMTEC ONE WILL PROTECT, HARDEN, DENSIFY, STRENGTHEN, & INCREASE THE USEFUL LIFE OF YOUR CONCRETE

"THE ULTIMATE CONCRETE PROTECTION"

CHEMTEC INT'L (513) 474-2090
7771 WOODSTONE DRIVE, SUITE 100, CINCINNATI OHIO 45244-2855

WARNING AND STATEMENT OF HAZARD: IRRITATING TO SKIN, EYES, MUCOUS MEMBRANES OF THE RESPIRATORY AND DIGESTIVE TRACTS.

MODERATE HEALTH HAZARD...1,
MINIMAL REACTIVITY HAZARD ...0,
MINIMAL FIRE HAZARD...0,

WEAR PERSONAL PROTECTION WHEN USING CHEMTEC ONE: PROTECT YOUR EYES AND SKIN BY WEARING RUBBER GLOVES, SAFETY GOGGLES, FACE SHIELDS, STURDY WORK BOOTS, LONG SLEEVE SHIRTS AND LONG PANTS. IF MISTING OR SPRAYING WEAR MIST RATED BREATHING PROTECTION.

WARNING AND STATEMENT OF HAZARD CONTINUED:

- DO NOT INGEST BUT IF SWALLOWED DO NOT INDUCE VOMITING - SEEK IMMEDIATE MEDICAL HELP.
- IF SKIN CONTACT OCCURS, PROMPTLY WASH WITH WATER. IF EYE CONTACT OCCURS, IMMEDIATELY FLUSH WITH A DIRECT STREAM OF WATER FOR 15 MINUETS.
- IF IRRITATION OR ILL EFFECTS DEVELOP OR PERSIST SEEK IMMEDIATE MEDICAL HELP.
- TREAT ACCORDING TO THE INDIVIDUAL'S CONDITION AND SPECIFICS OF THE EXPOSURE.
- THIS FORMULA IS NOT SUBJECT TO RESTRICTIVE OR SPECIAL HANDLING DEFINED UNDER ENVIRONMENTAL REGULATIONS.
- KEEP CONTAINER CLOSED WHEN NOT IN USE. WHEN CONTAINER IS EMPTY, CONTINUE TO OBSERVE ALL SAFETY PRECAUTIONS.
- DO NOT REUSE CONTAINER UNLESS COMMERCIALLY CLEANED.
- REFER TO THE MSDS FOR ADDITIONAL HANDLING AND SAFETY INFORMATION.

WARNING: Wear personal protective clothing that will shield you from contact with this formulation. Avoid contact with skin. Avoid contact with eyes. Do not ingest. Ventilate the work area well. If a runny noise begins and persist go to fresh air until symptoms stop. If asthmatic symptom begin go to fresh air until they stop. Vapor rated respirators are recommended in closed areas if good ventilation can not be achieved. There are however no special handling requirements defined in environmental regulations. Preparation prior to working with CHEMTEC ONE... an alkaline soluble formulation that is likely to irritate on contact with the body. Wear face shields and safety glasses. Wear tough standard work boots. Wear long pants. Wear long sleeve shirts. Wear long gloves Wear other protective gear that is mandated by the environment.

HOW TO APPLY THE CHEMTEC ONE FORMULATIONS

PREPARATION: Prior to implementing the project. Remove debris from the concrete to be treated. Be sure to clean the concrete to a state which is water permeable and porus, use CHEMTEC CONCRETE CLEANER to prepare soiled concrete. Cover drains to prevent loss and waste of material. Install temporary fan or ventilation in enclosed areas. Bring opened container of the material or pumping system into the area to be treated. Bring tools for all members of the implementation team for the distribution of the material in the project area like squeegees, brooms, sprayers and so on. New floors do not need any preparation.

APPLICATION: Pre-determine the amount of formula (Gallons) that will be needed to complete the project.

A) Application on Steel troweled Surfaces: CHEMTEC ONE is applied in ONE application at a rate of 175 to 250 square feet per gallon. On new floors, you can install the formula as soon as possible after the finish troweling operation. After the surface is hard enough to walk on with out marking. Simply saturate the surface with the formula, keeping the entire surface wet for 30 to 45 minuets. Areas that puddle should be pushed to dryer areas with a bristle broom. Areas that dry prematurely, should have more formula pushed to it or be re-sprayed. After the floor has been keep wet for the proper amount of time, then, squeegee the formula off the surface and allow the floor to dry. On existing floors, thoroughly clean the floors so that they are water permeable. (Use CHEMTEC CONCRETE CLEANER to clean and degrease the floors). The existing floor must be completely dry. Use the same application as above except, brush the formula in with bristle brooms for 30 to 45 minuets to aid in penetration, then squeegee the formula off the surface and allow the floor to dry. A sheen will normally develop over time. CAUTION: DO NOT allow areas to puddle and dry as they will leave a hard white crystal on the surface. **B) Application on brushed finished fully cured surfaces such as bridge decks, roads, loading ramps, parking facilities, driveways and so on.** CHEMTEC ONE is applied in TWO applications at a rate of 100 to 150 square feet per-gallon for each application. Simply saturate the surface and let it dry using the following method. Puddling areas should be pushed over to dryer areas. Areas that dry prematurely should have more formula pushed to it or be re-sprayed. Brush the formula around the surface until it is absorbed in, then just let it dry. The goal is to get the proper amount of formula to penetrate as uniformly as possible. The second application is a repeat of the first application. WAIT a minimum of **6 hours** between applications. CAUTION: There must be a minimum of **12 hours** with NO water being allowed on the surface. **A quality control step to make sure you have reached proper saturation levels is to, take an eye dropper with muriatic acid with 28% HCL level and randomly test the concrete with a drop of acid immediately after the second application has dried. Put a drop of acid on the treated surface and observe it for a few seconds, then wipe it up. If you get very little to no reaction to the acid you have reached the proper saturation level. If it reacts you need to put more material on those areas until the acid does not react. C) Application on Vertical or underneath bridge decks or parking facility ceiling surfaces.** Because you are working against the force of gravity and using the wicking acting of the concrete to draw the formula in on those surfaces, you will need to apply CHEMTEC ONE at a slower rate with a minimum of two to three applications. Use a paint roller or a mist sprayer to apply the formula. The surface must be completely dry before proceeding. On vertical surfaces apply the formula starting at the top of the surface, working you way down. Apply the formula by saturation the surface, but not creating excessive run off. Wait until the surface is dry approximately 2 to 3 hours before applying the second and third applications. Use thee same procedure on each application. **When applying the formula on the underneath of bridge decks or parking facilities ceilings,** saturate the surface until the formula starts to drip back out. Wait until the surface is dry, approximately 2 to 3 hours and perform the second and third applications the same as the first application. This particular type surface application will take 3 application. Coverage will vary with particular concrete being treated, the temperature and the amount of wast generated by the applicator. Normal coverage rate for this type of application should bee 175 to 200 square feet per gallon for each application.

☞ It is likely that the treated concrete will have a brown tint when the project is complete that will not remain, but it is an indication that iron is present in the concrete. After the last application has dried traffic can return to the area. Roughly three hours after the completion of the project.

CHEMTEC ONE

"THE ULTIMATE CONCRETE PROTECTION"

Manufactured by

CHEMTEC INT'L **Cincinnati Ohio**

(513) 474-2090 Toll Free 1-888-889-7779 E-mail J. slst@worldnet.att.net

☞ **Please watch the weather reports,** it is crucial that the surface of the concrete not get wet for at least 10 to 12 hours after the final application of the product. Avoid applying or splashing on glass, painted surfaces, or aluminum. Product may stain these surfaces. Protect decorative fronts from contact. Keep out of traffic pattern when treating roadways or bridges . **DO NOT STORE IN ALUMINUM OR METAL CONTAINERS.**

CHEMTEC INTL

Better Chemistry Produces Superior Products

General Offices
7771 Woodstone Drive
Suite 102
Cincinnati Ohio 45244
(513) 474-2090 Voice 474 2054 Fax
E-mail j. sist@worldnet.att.net

CONCRETE ABRASION RESISTANCE INCREASE WITH CHEMTEC

Enclosed please find the preliminary lab test for hardness increase on my CHEMTEC product. The test is ASTM C-779. It is a rotation abrasion disk constantly running across the surface of an untreated and a treated specimen.

As you can see the results were that the treated specimen showed an increase resistance of 45% after 30 minuets as compared to the untreated specimen and an increase of 13% after 60 minuets of constant abrasive grinding as compared to the untreated specimen. This test was performed by Construction Technology Labs in Chicago IL on 10-24-97. This type of abrasion resistance will make concrete more durable, increase the useful life and eliminate dusting problems.

	Treated Specimen	Non-Treated Specimen
Test Results: WEAR - Inches @ 30 minuets	0.044	0.080
@ 60 minuets	0.097	0.111

Sincerely,
Jim Sist

ROTATING DISK ABRASION TEST-ASTM C779

PROJECT NO 051102 METHOD A DATE 10/24/97

SPECIMEN CHEMTEC TESTED BY BRYCE AGE 28 DAYS

Reading Location	MINUTES OF WEAR						
	0	2	15	30	45	60	120
A1	169			242		272	
A2	166			240		271	
A3	169			245		271	
A4	165			237		267	
A5	163			238		257	
A6	162			234		262	
A7	157			233		263	
A8	154			228		256	
	***	***	***	***	***	***	***
B1	134			196		228	
B2	137			195		227	
B3	138			200		231	
B4	135			197		226	
B5	138			200		233	
B6	134			198		228	
B7	135			201		237	
B8	132			198		231	
	***	***	***	***	***	***	***
C1	121			176		203	
C2	123			182		201	
C3	121			179		191	
C4	122			180		211	
C5	124			181		210	
C6	118			178		212	
C7	113			177		211	
C8	113			173		209	
	***	***	***	***	***	***	***
D1	142			128		251	
D2	147			131		254	
D3	144			125		249	
D4	147			133		255	
D5	143			124		249	
D6	145			126		249	
D7	140			117		242	
D8	138			119		244	
	***	***	***	***	***	***	***
WEAR In->	0.000			0.044		0.097	

REMARKS: AIR DRY

ROTATING DISK ABRASION TEST-ASTM C779

PROJECT NO 051002 METHOD A DATE 10/24/97

SPECIMEN CONTROL TESTED BY BRYCE AGE 28 DAYS

Reading Location	MINUTES OF WEAR						
	0	2	15	30	45	60	120
A1	191			265		319	
A2	191			268		322	
A3	191			263		316	
A4	188			285		317	
A5	180			260		314	
A6	181			281		314	
A7	176			257		308	
A8	174			257		307	
	***	***	***	***	***	***	***
B1	162			242		301	
B2	152			238		294	
B3	157			243		299	
B4	151			234		291	
B5	158			240		297	
B6	150			235		291	
B7	153			236		294	
B8	142			232		286	
	***	***	***	***	***	***	***
C1	173			260		222	
C2	173			280		221	
C3	176			268		226	
C4	177			265		225	
C5	181			273		234	
C6	182			271		232	
C7	186			279		241	
C8	182			272		235	
	***	***	***	***	***	***	***
D1	127			193		247	
D2	133			199		255	
D3	131			199		253	
D4	145			205		260	
D5	133			202		256	
D6	140			208		262	
D7	136			205		260	
D8	139			212		265	
	***	***	***	***	***	***	***
WEAR in->	0.000			0.080		0.111	

REMARKS: MOIST ROOM

Construction Technology Laboratories, Inc.

TECHNICAL DATA
CHEMTEC INT'L

1. PRODUCT NAME
CHEMTEC ONE™

High Performance Water Based Non-Toxic Chemical Treatment that hardens, strengthens, stabilizes, protects and extends the useful life of concrete structures.

2. MANUFACTURE

CHEMTEC INTL
7771 Woodstone Drive, Suite 100
Cincinnati Ohio 45244-2855
Phone (513) 474-2090
Fax (513) 474-2054

3. PRODUCT DESCRIPTION

A colorless non-toxic chemical that penetrates the concrete permeable zones producing a insoluble by-product that directly encapsulates the cementous properties of concrete, thereby greatly reducing the porosity, increasing the surface hardness and compression strength. Protecting the concrete form attack by liquids acids, salts and other contaminants

PROTECTING CONCRETE

This process actually produces a reactive by-product that fills the gel pours, shrinkage cracks and alligator cracks of the concrete. The by-product can in some cases reach depths of over 3 inches into the concrete, making the concrete extremely resistant to water and contaminant penetration. The process allows the concrete to breathe while still giving excellent protection. This process keeps the alkaline content (pH) high, and in cases where deteriorated concrete is being treated, actually raise the pH of the concrete thereby stabilizing and some cases reversing the deterioration. This process should be used prior to concrete repair, because of its ability to raise the pH of existing deteriorated concrete.

HARDENING

Because this process produces a reactive and solid by-product in the concrete, it increases the mass and density thereby making the surface harder and increase the compression strength. Lab test have shown up to 45% increase in hardness of treated samples with *CHEMTEC ONE* vs non-treated samples. Reactive product have been used for years as commercial floor protectors / hardeners. We now have the proper formula for deep penetrating protection for all fully cured concrete

USES

CHEMTEC ONE'S primary use is for protecting fully cured existing dense concrete structures such as Commercial Floors, Parking Facilities, Bridges, Loading Ramps, Driveways, Walkways, Roads, Runways, Taxiways and any concrete structure. This process can increase the useful life of normal concrete up to 40%. This process is designed for normal dense high strength concrete and should not be used on porus concrete blocks or similar type concrete.

4. TECHNICAL DATA

TEMPERATURE LIMITS: *CHEMTEC ONE* can be applied in temperatures as low as 35° F and as high as 90° F . Do not allow the surface to freeze for at least 12 hours after the final application.

DRYING TIME: Normal drying time is about 2 to 4 hours depending on the temperature and humidity. The surface must be completely dry prior to applying *CHEMTEC ONE.*

PAINTING: The surface can be painted on 24 hours after the surface has completely dried. However, it is recommendation that you wash off the surface with fresh water and let thoroughly dry before painting lines or anything else on the surface.

INTERNAL MAKEUP: A proprietary blend of reactive silicates and surface active agents. Non-Toxic, Non-flammable, Non-Hazardous. NO special handling requirements under environmental regulations.

CAUTIONS: *CHEMTEC ONE* is high in alkaline content. Wear protective clothing, gloves, breathing apparats an so on. Make sure there is adequate ventilation. See MSDS, booklet for complete safety data. DO NO apply or splash on glass or painted surfaces, protect decorative door fronts as this product may stain them. If you do splash on these surfaces, clean with fresh water immediately. DO NO store in aluminum, containers or use aluminum spraying equipment. CLEAN UP equipment with soap and water as soon as possible after use. CAUTION, leaving residue in spraying equipment may damage equipment.

COLOR: *CHEMTEC ONE* is a clear liquid and comes pre mixed. DO NOT dilute. A slight brown tint may appear on the surface of the concrete after the final application. This is a sign that iron is present in the concrete. This will wash / wear off in of time.

PACKAGING 55-Gallon drums and 5-Gallon buckets / bulk shipments available.

COVERAGE: the average coverage for fully cured brushed finished concrete will range between 100 to 150 square feet per application. Two applications are necessary on these types of concrete surfaces. The coverage for commercial steel troweled concrete floors should be between 175 and 250 square feet per gallon. and generally only one application is necessary.

ANTICIPATED TREATMENT RESULTS: The *CHEMTEC ONE* treatment can produce the following results.

- Reduce the porosity of existing concrete by up to 90%.
- Increase the surface hardness in existing concrete by up to 45% as results of ASTM C-779
- Increase the compression strength in deteriorated concrete.
- Reduce chloride penetration.
- Inhibit chemical attack of treated concrete.
- Form a gelling to a solid by-product in the micro-cracks, gel pours and alligator cracks in the concrete to the depth of penetration.
- Retard scaling of high strength concrete. Meets ASTM C-672
- Raise the pH of deteriorated concrete

H. C. NUTTING COMPANY
EMPLOYEE OWNED
GEOTECHNICAL, ENVIRONMENTAL AND TESTING ENGINEERS
SINCE 1921
WO 1574403!

CORPORATE CENTER
4125 AIRPORT ROAD
CINCINNATI, OH 45226
(513) 321-5816
FAX (513) 321-0294

Mr James Sist
Chem Tec International
7771 Woodstone Dr.
Suite 100
Cincinnati Ohio 45244-2855

June 9, 1998

Subj: Absorption Test Results for
Concrete Specimens treated
with ChemTec One per ASTM C 642

Re: Test 1: Absorption after 48 hours

Re: Test 2: Absorption after 50 days

Dear Mr. Sist,

We are pleased to submit herewith the results of two absorption tests conducted with ChemTec One, a reactive silicate, having been previously applied in accordance with the manufacturer's specifications. The absorption test procedures were conducted in accordance with ASTM C 642. The two test specimens were normal weight concrete, non-air entrained, manufactured per ASTM C 672.

Specimens will be available for examination for 60 days. It has been a pleasure serving you. If we can be of further assistance please contact the undersigned.

Results:

SPECIMEN # 1 **0.54% absorption after 48 hours, 1.66% absorption after 50 days**

SPECIMEN # 2 **0.33% absorption after 48 hours, 1.04% absorption after 50 days**

Respectfully Submitted,

Gary D, Pfuehler, P. E.
Senior Materials engineer

Robert L. House
Director of Laboratories

H. C. NUTTING COMPANY
EMPLOYEE OWNED
GEOTECHNICAL, ENVIRONMENTAL AND TESTING ENGINEERS
SINCE 1921
CORPORATE CENTER
4122 AIRPORT ROAD
CINCINNATI, OHIO 45226
(513) 321-5816
FAX (513) 321-0294

WO 15744001

Mr. James Sist
Chem Tec International
7771 Woodstone Dr
Suite 100
Cincinnati, Ohio 45244-2855

June 8, 1998

Subj: Soluble Chloride Test Results from concrete surfaces treated with ChemTec One, conducted per Modified EPA Method 300

Re: Test Specimen ID 3249 and 3250

Dear Mr. Sist,

We are pleased to submit herewith the results of two soluble chloride tests conducted on two respective concrete specimens each having been treated with ChemTec One, a reactive slicate, previously applied in accordance with the manufacturer's specifications. Test samples were extracted from concrete surfaces that had been exposed to100, plus, freeze-thaw cycles, while in the presence of a 2% solution of sodium Chloride.

Test samples are identified as HCN lao samples 3249 and 3250. The soluble chloride test procedures were conducted in accordance with the Modified EPA Method 300. The test results are tabulated in the attached chart for each test.

The results are classified as "excellent" since the amount of soluble chloride is very low for both tests.

ChemTec One was applied at the rate of 100 sq. ft. per gallon per application, with two applications 8 hours apart. Curing time exceeded 24 hours.

Specimens will be available for examination for 60 days. It has been a pleasure serving you. If we can be of further assistance to you please contact the undersigned.

Respectfully Submitted,

Gary D. Pfuehler, P. E.
Senior Materials Engineer

Robert L. House, VP
Director of Laboratories

K. C. NUTTING COMPANY
GEOTECHNICAL, ENVIRONMENTAL AND TESTING ENGINEERS
SINCE 1921

CORPORATE OFFICE
4120 AIRPORT ROAD
CINCINNATI, OHIO 45226
(513) 321-5816
FAX (513) 321-0294

Sample Set ID: 98-C-3094

Data Table
Chloride

Client ID	Lab ID	mg/kg (ppm)	% Chloride
3249	98-18212	810.	0.081
3250	98-18213	560.	0.056
	PQL	2.0	0.00020

ND indicates analyte was not detected above the Practical Quantitation Limit(PQL).

Hong Ngo
Analyst

Data Review

H. C. NUTTING COMPANY

GEOTECHNICAL, ENVIRONMENTAL AND TESTING ENGINEERS
SINCE 1921

CORPORATE CENTER
4120 AIRPORT ROAD
CINCINNATI, OHIO 45226
(513) 321-5816
FAX (513) 321-0294

June 15, 1998

W.O.#15744.001 dsu

Mr. James Sist
ChemTec International
7771 Woodstone Drive
Suite 100
Cincinnati, Ohio 45244-2855

RE: Scaling Performance Rating of Concrete Surfaces treated with ChemTec One per ASTM C 672

Dear Mr. Sist:

The H. C. Nutting Company is pleased to submit herewith the test results for the resistance to surface scaling of plain, non- air entrained concrete, previously treated with soluble reactive silicate, "ChemTec One". After 100 freeze/thaw cycles, in the presence of a 2% solution of sodium chloride, the visual performance rating for the two specimens tested was "zero" scaling, (no scaling) when rated in accordance with the following data; per ASTM C 672:

Rating	Condition of Surface
0	no scaling
1	very slight scaling (1/8 in. (3.2 mm) depth, max. no coarse aggregate visible)
2	slight to moderate scaling
3	moderate scaling (some coarse aggregate visible)
4	moderate to severe scaling
5	severe scaling (coarse aggregate visible over entire surface)

ChemTec One was applied at the rate of 100 sq. ft. per gallon per application with two applications 8 hours apart. Curing time exceeded 24 hours

Complete laboratory data for the specimens tested is available upon request, and all samples are available for your examination for 60 days, photographs are also available. It has been a pleasure serving you. If we can be of further assistance to you please contact the undersigned.

Respectfully submitted,
H. C. NUTTING COMPANY

Gary D. Pfuehler, P. E.
Senior Materials Engineer

Robert L. House
Director of Laboratories

TESTING INFORMATION
FOR SURE TREAT
(SAME AS CHEM TECH ONE
AND
SIMILAR TO PRO-TECH)

SURTREAT

Headquarters
Allegheny Building
429 Forbes Ave. Suite 1111
Pittsburgh PA 15219

Research & Development
University of Pittsburgh, Research Center
805 William Pitt Way
Pittsburgh PA 15238

SURTREAT CHEMICAL RESISTANCE PROPERTIES

Concrete surface treated according to manufactures specifications with SURTREAT formulation will resist reaction with and penetration by inorganic acids such as:

Hydrochloric - 32%
Sulfuric - 98%
Sulfuric - 50%
Nitric - Concentrated

and organic acids such as:

Acetic - Glacial
Acetic - 50%
Citric - Aqueous Solution

and inorganic bases such as:

Sodium hydroxide - 50% solution
Potassium hydroxide - 50% solution

and most aggressive organic liquids such as:

Acetone
Chloroform
Trichloroethylene
Xylene
Benzene
Methanol
Dimethylsulfoxide
Tetrahydrofurane
Dimethyl Acetamide

All resistance test were run on SURTREAT coated surfaces by applying a few drops of each chemical to the surface and observing the effect in the time frame of one hour versus similar application to an uncoated surface.

Specific resistance tests can be run on any combination of the chemicals which may be of concern. For futher information on SURTREAT chemical resistance please contact :

Sist / Robinson Int'l Inc.
7771 Woodstone Drive
Suite 100
Cincinnati Ohio 45244-2855
(513)474-2090
(812) 637-1733

ATTACHMENT 4-10

MARCH 2015 EXISTING TANKS' ASSESSMENT
MARCH 2015 TANKS' INSPECTION REPORT
1989 ORIGINAL TANK ASSESSMENT

ROUNDTABLE
ENGINEERING SOLUTIONS

March 30, 2015

Mr. Monte Londot, General Manager
Clean Harbors Recycling Services of Ohio, LLC
581 Milliken Drive
Hebron, OH 43025

Re: Assessment of Existing Tank Systems' Integrity (OAC 3745-55-91)

Dear Mr. Londot:

Ninety-two (92) tanks located at the Clean Harbors facility in Hebron, OH were inspected during the week of March 23rd, 2015 using a combination of ultrasonic thickness testing equipment, external inspection and a review of the historic tank thickness and internal inspection data retained from previous inspections. The adequacy of these tanks for continued service was confirmed based on the data provided, good engineering practice, and the requirements of the applicable tank construction codes.

As a result, I attest that I am a qualified Registered Professional Engineer in the State if Ohio. I have reviewed existing tank assessments and associated data and attest in writing that the abovementioned 92 tanks' system is adequately designed and has sufficient structural strength and compatibility with the waste(s) to be stored or treated, to ensure that it will not collapse, rupture, or fail. I have attached a list of the tanks inspected and a copy of the March 23rd 2015 tank inspection report is on file at the facility.

I certify under penalty of law that this document and all attachments were prepared under my direction or supervision in accordance with a system designed to assure that qualified personnel properly gather and evaluate the information submitted. Based on my inquiry of the person or persons who manage the system, or those persons directly responsible for gathering the information, the information submitted is, to the best of my knowledge and belief, true, accurate, and complete. I am aware that there are significant penalties for submitting false information, including the possibility of fine and imprisonment for knowing violations.

Yours truly,

Brian E. Lewis

Brian E. Lewis, PE
Roundtable Engineering Solutions

STATE OF OHIO
BRIAN
LEWIS
E-78723
REGISTERED
PROFESSIONAL ENGINEER

3/30/15

TANK FARM No. 1

SK Tank No.	OEPA ID No.	Status	Tank Farm	Capacity (Gallons)	Bottom Type	Material Construction
32	T132	HW	1	15,000	CONE	C/S
33	T133	HW	1	15,000	CONE	C/S
34	T134	HW	1	15,000	CONE	C/S
35	T135	HW	1	15,000	CONE	C/S
36	T136	HW	1	15,000	CONE	C/S
37	T137	HW	1	15,000	CONE	C/S
39	T139	HW	1	15,000	CONE	C/S
40	T140	HW	1	15,000	CONE	C/S
41	T141	HW	1	15,000	CONE	C/S
42	T142	HW	1	15,000	CONE	C/S
43	T143	HW	1	15,000	CONE	C/S
44	T144	HW	1	15,000	CONE	C/S
45	T145	HW	1	15,000	CONE	C/S
48A	T148	In-Process	1	7,500	P-B	C/S
48B	T106	In-Process	1	7,500	P-B	C/S
49	T149	HW	1	20,000	FLAT	C/S
50	T150	HW	1	20,000	FLAT	C/S
51	T151	HW	1	30,000	FLAT	C/S
52	T152	HW	1	30,000	FLAT	C/S
53	T153	HW	1	30,000	FLAT	C/S
56	T156	HW	1	15,000	CONE	C/S
57	T157	HW	1	15,000	CONE	C/S
58	T158	HW	1	15,000	CONE	C/S
59	T159	HW	1	30,000	FLAT	C/S
60	T160	HW	1	30,000	FLAT	C/S
61	T161	HW	1	30,000	FLAT	C/S
63	T163	HW	1	15,000	CONE	C/S
64	T164	Product Storage	1	20,000	FLAT	C/S LINED
65	T165	HW	1	15,000	CONE	C/S
66	T166	HW	1	15,000	CONE	C/S
67	T167	HW	1	30,000	FLAT	C/S
68	T168	HW	1	30,000	FLAT	C/S
69	T169	HW	1	30,000	FLAT	C/S

TANK FARM No. 2

SK Tank No.	OEPA ID No.	Status	Tank Farm	Capacity (Gallons)	Bottom Type	Material Construction
80	T180	HW	2	15,000	CONE	C/S
81	T181	HW	2	15,000	CONE	C/S
82	T182	HW	2	15,000	CONE	C/S
83A	T183	HW	2	7,500	P-B	C/S
83B	T107	HW	2	7,500	P-B	C/S
84A	T184	HW	2	7,500	P-B	C/S

84B	T108	HW	2	7,500	P-B	C/S
85	T185	HW	2	15,000	CONE	C/S
86	T186	HW	2	15,000	CONE	C/S
87	T187	HW	2	15,000	CONE	C/S
88	T188	HW	2	15,000	CONE	C/S
89A	T189	HW	2	7,500	P-B	C/S
89B	T109	HW	2	7,500	P-B	C/S
90	T190	HW	2	15,000	CONE	S/S
91	T191	HW	2	15,000	CONE	C/S
92A	T192	HW	2	7,500	P-B	C/S
92B	T110	HW	2	7,500	P-B	C/S
93	T193	HW	2	15,000	CONE	C/S
94A	T194	HW	2	7,500	P-B	C/S
94B	T111	HW	2	7,500	P-B	C/S
95	T195	HW	2	15,000	CONE	S/S
100	T200	HW	2	15,000	CONE	S/S
101	T201	HW	2	15,000	CONE	C/S
102A	T202	HW	2	7,500	P-B	C/S
102B	T112	HW	2	7,500	P-B	C/S
103	T203	HW	2	15,000	CONE	S/S
104	T204	HW	2	15,000	CONE	S/S
105	T205	HW	2	15,000	CONE	C/S
106	T206	HW	2	30,000	FLAT	S/S
107	T207	HW	2	30,000	FLAT	S/S
108	T208	HW	2	15,000	CONE	S/S
109	T209	HW	2	15,000	CONE	S/S
110	T210	HW	2	15,000	CONE	C/S
111	T211	HW	2	30,000	FLAT	S/S
112	T212	HW	2	30,000	FLAT	S/S
113	T213	HW	2	15,000	CONE	S/S
114	T214	HW	2	15,000	CONE	S/S

TANK FARM No. 3

SK Tank No.	OEPA ID No.	Status	Tank Farm	Capacity (Gallons)	Bottom Type	Material Construction
125	T225	Product Storage	3	20,000	FLAT	C/S LINED
126	T226	Product Storage	3	20,000	FLAT	C/S LINED
127	T095	Product Storage	3	15,000	CONE	C/S

130	T230	Product Storage	3	20,000	FLAT	C/S LINED
131	T231	Product Storage	3	20,000	FLAT	C/S LINED
132	T232	Product Storage	3	20,000	FLAT	C/S LINED
135	T235	Product Storage	3	20,000	FLAT	C/S LINED
136	T236	Product Storage	3	20,000	FLAT	C/S LINED
137	T237	Product Storage	3	20,000	FLAT	C/S LINED
140	T240	Product Storage	3	20,000	FLAT	C/S LINED
141	T241	Product Storage	3	20,000	FLAT	C/S LINED
142	T242	Product Storage	3	20,000	FLAT	C/S LINED
145	T245	Product Storage	3	20,000	FLAT	C/S LINED
146	T246	Product Storage	3	20,000	FLAT	C/S LINED
147	T247	Product Storage	3	20,000	FLAT	C/S LINED

TANK FARM No. 4

SK Tank No.	OEPA ID No.	Status	Tank Farm	Capacity (Gallons)	Bottom Type	Material Construction
203	T096	HW	4	15,000	CONE	C/S
204	T101	HW	4	15,000	CONE	C/S
205	T102	HW	4	15,000	CONE	C/S
208	T091	Wastewater	4	10,000	FLAT	C/S
209	T103	HW	4	15,000	CONE	C/S

TANK FARM No. 4

SK Tank No.	OEPA ID No.	Status	Tank Farm	Capacity (Gallons)	Bottom Type	Material Construction
99	NA	Raw Material	NA	20,000	FLAT	C/S
98	T248	HW	6	20,000	FLAT	C/S

Steel Tank Institute (STI)
External Inspection of AST's

Prepared for:

Clean Harbors Recycling Services of Hebron, LLC
581Miliken Drive
Hebron, OH 43025

Prepared by:
N.D. Eryou, PhD, P.E.
5100 Tamiami Trail North
Suite 103
Naples, FL 34103

March 2015

TABLE OF CONTENTS

SECTION		Page
1.0	**INTRODUCTION**	2
	1.1 Background	2
	1.2 Objectives	5
2.0	**TEST PROCEDURE**	6
3.0	**DISCUSSION OF RESULTS**	7
4.0	**CONCLUSIONS**	8

APPENDICES

Appendix A	Test / Inspection Data
Appendix B	Photographs
Appendix C	Site Plan

1. INTRODUCTION

1.1 Background

Clean Harbors is the owner and operator of a recycling facility for recycling spent industrial solvents in Hebron Ohio. This facility is permitted by Ohio Administrative Code 3745-50 Ohio Environmental Protection Agency Part B under permitted facility that recycles spent industrial solvents. The facility also provides fuel blending and wastewater treatment. The facility performs solvent distillation on a wide variety of petrochemical and chlorinated solvents, including trichloroethylene (TCE), perchloroethylene (PCE) and methylene chloride. Recycled solvents are sold in bulk in a variety of container sizes.

The facility has ninety two (92) above ground steel storage tanks located in multiple tank farms within the facility; each tank farm has concrete containment dikes. There is bulk storage capacity for 482,000 gallons and 136,080 gallons for containers. There are no underground storage tanks on site used for the storage/processing of regulated substances; a site plan for the facility is included in Appendix C.

TANK FARM No. 1

SK Tank No.	OEPA ID No.	Status	Tank Farm	Capacity (Gallons)	Bottom Type	Material Construction
32	T132	HW	1	15,000	CONE	C/S
33	T133	HW	1	15,000	CONE	C/S
34	T134	HW	1	15,000	CONE	C/S
35	T135	HW	1	15,000	CONE	C/S
36	T136	HW	1	15,000	CONE	C/S
37	T137	HW	1	15,000	CONE	C/S
39	T139	HW	1	15,000	CONE	C/S
40	T140	HW	1	15,000	CONE	C/S
41	T141	HW	1	15,000	CONE	C/S
42	T142	HW	1	15,000	CONE	C/S
43	T143	HW	1	15,000	CONE	C/S
44	T144	HW	1	15,000	CONE	C/S
45	T145	HW	1	15,000	CONE	C/S
48A	T148	In-Process	1	7,500	P-B	C/S
48B	T106	In-Process	1	7,500	P-B	C/S
49	T149	HW	1	20,000	FLAT	C/S
50	T150	HW	1	20,000	FLAT	C/S
51	T151	HW	1	30,000	FLAT	C/S
52	T152	HW	1	30,000	FLAT	C/S
53	T153	HW	1	30,000	FLAT	C/S
56	T156	HW	1	15,000	CONE	C/S
57	T157	HW	1	15,000	CONE	C/S
58	T158	HW	1	15,000	CONE	C/S
59	T159	HW	1	30,000	FLAT	C/S
60	T160	HW	1	30,000	FLAT	C/S
61	T161	HW	1	30,000	FLAT	C/S
63	T163	HW	1	15,000	CONE	C/S
64	T164	Product Storage	1	20,000	FLAT	C/S LINED
65	T165	HW	1	15,000	CONE	C/S
66	T166	HW	1	15,000	CONE	C/S
67	T167	HW	1	30,000	FLAT	C/S
68	T168	HW	1	30,000	FLAT	C/S
69	T169	HW	1	30,000	FLAT	C/S

TANK FARM No. 2

SK Tank No.	OEPA ID No.	Status	Tank Farm	Capacity (Gallons)	Bottom Type	Material Construction
80	T180	HW	2	15,000	CONE	C/S
81	T181	HW	2	15,000	CONE	C/S
82	T182	HW	2	15,000	CONE	C/S
83A	T183	HW	2	7,500	P-B	C/S
83B	T107	HW	2	7,500	P-B	C/S
84A	T184	HW	2	7,500	P-B	C/S
84B	T108	HW	2	7,500	P-B	C/S
85	T185	HW	2	15,000	CONE	C/S
86	T186	HW	2	15,000	CONE	C/S
87	T187	HW	2	15,000	CONE	C/S
88	T188	HW	2	15,000	CONE	C/S
89A	T189	HW	2	7,500	P-B	C/S
89B	T109	HW	2	7,500	P-B	C/S
90	T190	HW	2	15,000	CONE	S/S
91	T191	HW	2	15,000	CONE	C/S
92A	T192	HW	2	7,500	P-B	C/S
92B	T110	HW	2	7,500	P-B	C/S
93	T193	HW	2	15,000	CONE	C/S
94A	T194	HW	2	7,500	P-B	C/S
94B	T111	HW	2	7,500	P-B	C/S
95	T195	HW	2	15,000	CONE	S/S
100	T200	HW	2	15,000	CONE	S/S
101	T201	HW	2	15,000	CONE	C/S
102A	T202	HW	2	7,500	P-B	C/S
102B	T112	HW	2	7,500	P-B	C/S
103	T203	HW	2	15,000	CONE	S/S
104	T204	HW	2	15,000	CONE	S/S
105	T205	HW	2	15,000	CONE	C/S
106	T206	HW	2	30,000	FLAT	S/S
107	T207	HW	2	30,000	FLAT	S/S
108	T208	HW	2	15,000	CONE	S/S
109	T209	HW	2	15,000	CONE	S/S
110	T210	HW	2	15,000	CONE	C/S
111	T211	HW	2	30,000	FLAT	S/S
112	T212	HW	2	30,000	FLAT	S/S
113	T213	HW	2	15,000	CONE	S/S
114	T214	HW	2	15,000	CONE	S/S

TANK FARM No. 3

SK Tank No.	OEPA ID No.	Status	Tank Farm	Capacity (Gallons)	Bottom Type	Material Construction
125	T225	Product Storage	3	20,000	FLAT	C/S LINED
126	T226	Product Storage	3	20,000	FLAT	C/S LINED
127	T095	Product Storage	3	15,000	CONE	C/S
130	T230	Product Storage	3	20,000	FLAT	C/S LINED
131	T231	Product Storage	3	20,000	FLAT	C/S LINED
132	T232	Product Storage	3	20,000	FLAT	C/S LINED
135	T235	Product Storage	3	20,000	FLAT	C/S LINED
136	T236	Product Storage	3	20,000	FLAT	C/S LINED
137	T237	Product Storage	3	20,000	FLAT	C/S LINED
140	T240	Product Storage	3	20,000	FLAT	C/S LINED
141	T241	Product Storage	3	20,000	FLAT	C/S LINED
142	T242	Product Storage	3	20,000	FLAT	C/S LINED
145	T245	Product Storage	3	20,000	FLAT	C/S LINED
146	T246	Product Storage	3	20,000	FLAT	C/S LINED
147	T247	Product Storage	3	20,000	FLAT	C/S LINED

TANK FARM No. 4

SK Tank No.	OEPA ID No.	Status	Tank Farm	Capacity (Gallons)	Bottom Type	Material Construction
203	T096	HW	4	15,000	CONE	C/S
204	T101	HW	4	15,000	CONE	C/S
205	T102	HW	4	15,000	CONE	C/S
208	T091	Wastewater	4	10,000	FLAT	C/S
209	T103	HW	4	15,000	CONE	C/S

TANK FARM No. 4

SK Tank No.	OEPA ID No.	Status	Tank Farm	Capacity (Gallons)	Bottom Type	Material Construction
99	NA	Raw Material	NA	20,000	FLAT	C/S
98	T248	HW	6	20,000	FLAT	C/S

1.2 Objective

Safety Kleen has an in-house tank assessment program wherein their staff performs a single ultrasonic reading per tank per year and recorded the data during the period from 2010 to 2015. In addition annual internal inspections were conducted by Safety Kleen staff and their records indicate the presence of internal corrosion as minor, appreciable or major internal corrosion.

Since Eryou had a limited amount of time to perform due diligence inspections on the ninety two tanks, it was determined that tanks that were more likely to have corrosion issues would be selected for the due diligence inspection. The following factors were considered in separating the tanks into two groups:

1. Tank material; stainless steel tanks were considered to be in the lower corrosion risk group and carbon steel tanks were considered to be in the higher risk group.
2. Evidence of internal tank corrosion based upon Safety Kleen historic data referred to in the first paragraph on this page would place a tank in the higher risk group.
3. Evidence of visible external corrosion by Eryou's inspector at the time of the current inspection would place a tank in the higher risk group.

Based upon the above criteria, Eryou's inspector identified forty nine tanks which had exhibited moderate to severe internal corrosion on various tank shell plates and or floor/cone bottom of the tanks during previous Safety Kleen internal tank inspections. External ultrasonic thickness testing was performed on these tanks and of the remaining forty three tanks that did not exhibit any internal rust twenty four were also inspected. All external testing performed, followed the requirements as detailed in the "Standard for the Inspection of Aboveground Storage Tanks SP001" with the exception of the number of ultrasonic test locations per tank. Due to the lack of access platforms, tank shell thickness measurements were limited to the exterior of cone bottom tanks and the first six feet of the tank shells, from the floor plate up and tank top thickness was not measured.

2.0 TEST PROCEDURE

The test procedure involved the use of an ultrasonic thickness tester, Panametrics 37DL Plus to determine the thickness of the tank shells and tank cone bottoms at a predetermined number of locations. All external ultrasonic thickness testing was done in accordance with "STI SP001-03 – Standard for Inspection of In-Service Shop Fabricated Aboveground Tanks for Storage of Combustible and Flammable Liquids". During the testing, standard calibration methodologies were utilized on a regular basis.

Ultrasonic testing and tank internal inspections were performed between March 23rd and March 25th, 2015.

3.0 DISCUSSION OF RESULTS

The vertical tanks inspected were originally fabricated to meet the requirements of UL 142 "Steel Aboveground Tanks for Flammable and Combustible Liquids".

The table below indicates the required minimum thicknesses for vertical tanks manufactured under UL 142.

Tank Component	Carbon Steel Tank	Stainless Steel Tank
Top	0.123"	0.086"
Shell	0.167"	0.115"
Bottom	0.240"	0.158"

"STI SP001-05 – Standard for Inspection of In-Service Shop Fabricated Aboveground Tanks for Storage of Combustible and Flammable Liquids" provides the minimum thickness for Category 1 tanks (Single wall tanks within secondary containment (continuous release detection method).

The STI criteria for taking a tank out of service for repair or replacement includes:

1. If the shell thickness is reduced anywhere to less than 25% of the original shell thickness, the tank shall be replaced or repaired. This corresponds to 0.042" for carbon steel tanks and .030" for stainless steel tanks.
2. If more than three square inches of one square foot of the tank shell is less than 50% of the original thickness, the tank shall be replaced or repaired. This corresponds to 0.084" for carbon steel tanks and .058" for stainless steel tanks.

STI SP001-05 provides a method for predicting the remaining useful structural life of tanks based upon a series of ultrasonic thickness measurements over intervals of at least one year, using the same instrument and measuring in the exact same location each time. Based upon decreasing thickness with time data, a tank thinning rate can be established in fractions of an inch per year. Knowing the minimum thickness required for continued service (either 25% or 50% of original shell thickness as noted above), the remaining useful service life of each tank can be predicted. Since Eryou has only one set of thickness measurements, a thinning rate and remaining useful life could not be calculated for the tanks measured.

It is recommended that these tanks be placed under a tank monitoring program based upon STI SP001-05, including regular owner inspections, STI external inspections and STI external inspections for Category 1 tanks. This would permit the calculation of thinning rates and remaining useful service life for each tank

4.0 CONCLUSIONS

Based upon the above criteria the forty nine "higher risk" tanks inspected and the twenty four "lower risk" tanks inspected, the tanks appear to be in good structural condition with a remaining useful service life in excess of five years. An examination of the onsite historical tank inspection data reviewed on site confirmed this conclusion and indicated that the nineteen tanks that were not inspected or tested were also in good structural condition with a remaining useful service life in excess of five years.

N. Dennis Eryou, PhD, P.E.
NJPE # GE34195
STI Inspector #R09109

04/01/2015
Date

APPENDIX A

SHELL THICKNESS DATA SUMMARY TABLES

Test / Inspection Data

TANK 32 (OEPA # T132) - Carbon Steel
HAZARDOUS WASTE
CONE BOTTOM MEASUREMENTS

NORTH	EAST	WEST	SOUTH	
0.296	0.305	0.285	0.293	4' From Cone Bottom
0.291	0.289	0.286	0.294	3' From Cone Bottom
0.293	0.301	0.292	0.296	24" From Cone Bottom
0.301	0.298	0.291	0.297	12" From Cone Bottom
0.294	0.289	0.294	0.296	6" From Cone Bottom
0.295	**0.296**	**0.290**	**0.295**	**AVERAGE**

UL 142 manuf. min. thickness = 0.240"

TANK 32 (OEPA # T133) - Carbon Steel
HAZARDOUS WASTE
CONE BOTTOM MEASUREMENTS

NORTH	EAST	WEST	SOUTH
0.291	0.294	0.296	0.288
0.289	0.296	0.298	0.288
0.286	0.295	0.281	0.291
0.288	0.291	0.297	0.291
0.289	0.286	0.296	0.287
0.289	**0.292**	**0.294**	**0.289**

UL 142 manuf. min. thickness = 0.240"

TANK 34 (OEPA # T134) - Carbon Steel
HAZARDOUS WASTE
CONE BOTTOM MEASUREMENTS

NORTH	EAST	WEST	SOUTH	
-	-	-	-	4' From Cone Bottom
0.303	0.299	0.287	0.307	3' From Cone Bottom
0.311	0.301	0.318	0.313	24" From Cone Bottom
0.329	0.314	0.327	0.311	12" From Cone Bottom
0.314	0.303	0.331	0.311	6" From Cone Bottom
0.251	**0.243**	**0.253**	**0.248**	**AVERAGE**

UL 142 manuf. min. thickness = 0.240"

TANK 35 (OEPA # T135) - Carbon Steel
HAZARDOUS WASTE
CONE BOTTOM MEASUREMENTS

NORTH	EAST	WEST	SOUTH
0.293	-	-	-
0.293	0.309	0.284	0.311
0.294	0.324	0.283	0.317
0.294	0.304	0.296	0.287
0.325	0.297	0.294	0.289
0.300	**0.309**	**0.289**	**0.301**

UL 142 manuf. min. thickness = 0.240"

TANK 37 (OEPA # T137) - Carbon Steel
HAZARDOUS WASTE
CONE BOTTOM MEASUREMENTS

NORTH	EAST	WEST	SOUTH	
0.297	0.296	0.294	0.296	4' From Cone Bottom
0.295	0.299	0.306	0.296	3' From Cone Bottom
0.296	0.297	0.297	0.295	24" From Cone Bottom
0.304	0.297	0.307	0.296	12" From Cone Bottom
0.285	0.299	0.297	0.291	6" From Cone Bottom
0.295	**0.298**	**0.300**	**0.295**	**AVERAGE**

UL 142 manuf. min. thickness = 0.240"

TANK 39 (OEPA # T139) - Carbon Steel
HAZARDOUS WASTE
CONE BOTTOM MEASUREMENTS

NORTH	EAST	WEST	SOUTH
0.312	0.319	0.310	0.317
0.323	0.320	0.311	0.319
0.317	0.294	0.321	0.299
0.317	0.304	0.289	0.313
0.317	0.307	0.304	0.311
0.317	**0.309**	**0.307**	**0.312**

UL 142 manuf. min. thickness = 0.240"

TANK 40 (OEPA # T140) - Carbon Steel
HAZARDOUS WASTE
CONE BOTTOM MEASUREMENTS

NORTH	EAST	WEST	SOUTH	
0.291	0.288	0.294	0.312	4' From Cone Bottom
0.297	0.289	0.284	0.315	3' From Cone Bottom
0.294	0.288	0.284	0.290	24" From Cone Bottom
0.289	0.290	0.291	0.291	12" From Cone Bottom
0.288	0.288	0.284	0.290	6" From Cone Bottom
0.292	**0.289**	**0.287**	**0.300**	**AVERAGE**

UL 142 manuf. min. thickness = 0.240"

TANK 41 (OEPA # T141) - Carbon Steel
HAZARDOUS WASTE
CONE BOTTOM MEASUREMENTS

NORTH	EAST	WEST	SOUTH
0.299	0.287	0.274	0.282
0.304	0.292	0.291	0.292
0.327	0.298	0.294	0.289
0.298	0.296	0.288	0.286
0.287	0.311	0.325	0.293
0.303	**0.297**	**0.294**	**0.288**

UL 142 manuf. min. thickness = 0.240"

TANK 42 (OEPA # T142) - Carbon Steel
TANK 42 (OEPA # T142)
HAZARDOUS WASTE
CONE BOTTOM MEASUREMENTS

NORTH	EAST	WEST	SOUTH	
0.293	0.279	0.281	0.280	4' From Cone Bottom
0.297	0.281	0.292	0.277	3' From Cone Bottom
0.297	0.291	0.289	0.277	24" From Cone Bottom
0.281	0.284	0.274	0.273	12" From Cone Bottom
0.295	0.296	0.281	0.290	6" From Cone Bottom
0.293	0.286	0.283	0.279	AVERAGE

UL 142 manuf. min. thickness = 0.240"

TANK 43 (OEPA # T143) - Carbon Steel
TANK 43 (OEPA # T143)
HAZARDOUS WASTE
CONE BOTTOM MEASUREMENTS

NORTH	EAST	WEST	SOUTH
0.299	0.286	0.292	0.293
0.300	0.290	0.293	0.298
0.296	0.304	0.303	0.307
0.300	0.306	0.302	0.285
0.302	0.299	0.292	0.309
0.299	0.297	0.296	0.298

UL 142 manuf. min. thickness = 0.240"

TANK 44 (OEPA # T144) - Carbon Steel
HAZARDOUS WASTE
CONE BOTTOM MEASUREMENTS

NORTH	EAST	WEST	SOUTH	
0.296	0.299	0.293	0.310	4' From Cone Bottom
0.292	0.299	0.285	0.305	3' From Cone Bottom
0.307	0.293	0.307	0.297	24" From Cone Bottom
0.289	0.287	0.289	0.300	12" From Cone Bottom
0.316	0.310	0.291	0.289	6" From Cone Bottom
0.300	0.298	0.293	0.300	AVERAGE

UL 142 manuf. min. thickness = 0.240"

TANK 45 (OEPA # T145) - Carbon Steel
HAZARDOUS WASTE
CONE BOTTOM MEASUREMENTS

NORTH	EAST	WEST	SOUTH
0.307	0.299	0.303	0.296
0.295	0.299	0.305	0.295
0.293	0.297	0.302	0.298
0.294	0.298	0.306	0.297
0.295	0.287	0.289	0.307
0.297	0.296	0.301	0.299

UL 142 manuf. min. thickness = 0.240"

TANK 48 (OEPA # T148) - Carbon Steel
HAZARDOUS WASTE - MISC
CONE BOTTOM MEASUREMENTS

NORTH	EAST	WEST	SOUTH	
-	-	-	-	4' From Cone Bottom
0.245	0.249	0.250	0.241	3' From Cone Bottom
0.244	0.242	0.249	0.247	24" From Cone Bottom
0.203	0.219	0.257	0.203	12" From Cone Bottom
0.230	0.198	0.237	0.253	6" From Cone Bottom
0.231	0.227	0.248	0.236	AVERAGE

UL 142 manuf. min. thickness = 0.240"

TANK 56 (OEPA # T156) - Carbon Steel
HAZARDOUS WASTE - DIESEL FUEL
CONE BOTTOM MEASUREMENTS

NORTH	EAST	WEST	SOUTH
-	-	-	-
0.274	-	-	-
0.274	-	-	-
0.282	-	-	-
-	-	-	-
0.277	-	-	-

UL 142 manuf. min. thickness = 0.240"

TANK 57 (OEPA # T157) - Carbon Steel
HAZARDOUS WASTE - VIRGIN 140 M/S
CONE BOTTOM MEASUREMENTS

NORTH	EAST	WEST	SOUTH	
-	-	-	-	4' From Cone Bottom
-	0.282	-	-	3' From Cone Bottom
-	0.279	-	-	24" From Cone Bottom
-	0.271	-	-	12" From Cone Bottom
-	-	-	-	6" From Cone Bottom
-	0.277	-	-	AVERAGE

UL 142 manuf. min. thickness = 0.240"

TANK 58 (OEPA # T158) - Carbon Steel
HAZARDOUS WASTE - VIRGIN 105 M/S
CONE BOTTOM MEASUREMENTS

NORTH	EAST	WEST	SOUTH
-	-	-	-
0.303	0.297	0.294	0.294
0.293	0.294	0.297	0.297
0.292	0.289	0.289	0.293
-	-	-	-
0.296	0.293	0.293	0.295

UL 142 manuf. min. thickness = 0.240"

TANK 80 (OEPA # T180) - Carbon Steel
HAZARDOUS WASTE-MIX CHLORINATEDS
CONE BOTTOM MEASUREMENTS

NORTH	EAST	WEST	SOUTH	
-	-	-	-	4' From Cone Bottom
0.324	0.293	0.308	0.310	3' From Cone Bottom
0.311	0.291	0.309	0.312	24" From Cone Bottom
0.309	0.290	0.314	0.304	12" From Cone Bottom
0.308	0.289	0.312	0.309	6" From Cone Bottom
0.313	**0.291**	**0.311**	**0.309**	**AVERAGE**

UL 142 manuf. min. thickness = 0.240"

TANK 81 (OEPA # T181) - Carbon Steel
HAZARDOUS WASTE-MIX CHLORINATEDS
CONE BOTTOM MEASUREMENTS

NORTH	EAST	WEST	SOUTH
0.295	0.291	0.313	0.279
0.297	0.287	0.312	0.273
0.299	0.272	0.298	0.276
0.302	0.286	0.299	0.234
0.313	0.287	0.301	0.271
0.301	**0.285**	**0.305**	**0.267**

UL 142 manuf. min. thickness = 0.240"

TANK 82 (OEPA # T182) - Carbon Steel
HAZARDOUS WASTE-MIX CHLORINATEDS
CONE BOTTOM MEASUREMENTS

NORTH	EAST	WEST	SOUTH	
0.299	0.315	0.278	0.309	4' From Cone Bottom
0.294	0.318	0.276	0.307	3' From Cone Bottom
0.292	0.287	0.289	0.295	24" From Cone Bottom
0.275	0.279	0.293	0.297	12" From Cone Bottom
0.299	0.296	0.292	0.297	6" From Cone Bottom
0.292	**0.299**	**0.286**	**0.301**	**AVERAGE**

UL 142 manuf. min. thickness = 0.240"

TANK 83B (OEPA # T107) - Carbon Steel
HAZARDOUS WASTE-MIX CHLORINATEDS
CONE BOTTOM MEASUREMENTS

NORTH	EAST	WEST	SOUTH
0.244	0.243	0.239	0.241
0.235	0.243	0.235	0.233
0.242	0.237	0.247	0.237
0.244	0.227	0.218	0.225
0.226	0.219	0.226	0.218
0.238	**0.234**	**0.233**	**0.231**

UL 142 manuf. min. thickness = 0.240"

TANK 84A (OEPA # T184) - Carbon Steel
HAZARDOUS WASTE-MIX CHLORINATEDS
CONE BOTTOM MEASUREMENTS

NORTH	EAST	WEST	SOUTH	
-	-	-	-	4' From Cone Bottom
0.238	0.239	0.246	0.245	3' From Cone Bottom
0.237	0.232	0.245	0.239	24" From Cone Bottom
0.240	0.249	0.238	0.257	12" From Cone Bottom
0.246	0.251	0.245	0.247	6" From Cone Bottom
0.240	**0.243**	**0.244**	**0.247**	**AVERAGE**

UL 142 manuf. min. thickness = 0.240"

TANK 85 (OEPA # T185) - Carbon Steel
HAZARDOUS WASTE-MIX CHLORINATEDS
CONE BOTTOM MEASUREMENTS

NORTH	EAST	WEST	SOUTH
-	-	-	-
0.333	0.324	0.327	0.334
0.320	0.319	0.320	0.323
0.323	0.319	0.322	0.321
0.324	0.329	0.321	0.321
0.325	**0.323**	**0.323**	**0.325**

UL 142 manuf. min. thickness = 0.240"

TANK 86 (OEPA # T186) - Carbon Steel
HAZARDOUS WASTE-MIX CHLORINATEDS
CONE BOTTOM MEASUREMENTS

NORTH	EAST	WEST	SOUTH	
-	-	-	-	4' From Cone Bottom
0.275	0.277	0.272	0.277	3' From Cone Bottom
0.289	0.288	0.275	0.279	24" From Cone Bottom
0.278	0.267	0.271	0.277	12" From Cone Bottom
0.275	0.267	0.271	0.281	6" From Cone Bottom
0.279	**0.275**	**0.272**	**0.279**	**AVERAGE**

UL 142 manuf. min. thickness = 0.240"

TANK 87 (OEPA # T187) - Carbon Steel
HAZARDOUS WASTE - 1,1,1, - TRICHLOROETHANE
CONE BOTTOM MEASUREMENTS

NORTH	EAST	WEST	SOUTH
-	-	-	-
0.265	0.264	0.267	0.272
0.271	0.269	0.279	0.273
0.273	0.267	0.270	0.271
0.272	0.269	0.277	0.271
0.270	**0.267**	**0.273**	**0.272**

UL 142 manuf. min. thickness = 0.240"

TANK 88 (OEPA # T188) - Carbon Steel
HAZARDOUS WASTE-MIX CHLORINATEDS
CONE BOTTOM MEASUREMENTS

NORTH	EAST	WEST	SOUTH	
-	-	-	-	4' From Cone Bottom
0.302	0.298	0.298	0.303	3' From Cone Bottom
0.301	0.303	0.301	0.296	24" From Cone Bottom
0.291	0.304	0.295	0.305	12" From Cone Bottom
0.298	0.301	0.299	0.297	6" From Cone Bottom
0.298	**0.302**	**0.298**	**0.300**	**AVERAGE**

UL 142 manuf. min. thickness = 0.240"

TANK 89A (OEPA # T189) - Carbon Steel
HAZARDOUS WASTE-MIX CHLORINATEDS
CONE BOTTOM MEASUREMENTS

NORTH	EAST	WEST	SOUTH
-	-	-	-
0.218	0.213	0.222	0.235
0.214	0.221	0.213	0.221
0.214	0.226	0.211	0.216
0.225	0.224	0.215	0.224
0.218	**0.221**	**0.215**	**0.224**

UL 142 manuf. min. thickness = 0.240"

TANK 90 (OEPA # T190) - Carbon Steel
HAZARDOUS WASTE-MIX CHLORINATEDS
CONE BOTTOM MEASUREMENTS

NORTH	EAST	WEST	SOUTH	
-	-	-	-	4' From Cone Bottom
0.252	0.239	0.258	0.257	3' From Cone Bottom
0.257	0.254	0.253	0.249	24" From Cone Bottom
0.252	0.257	0.249	0.236	12" From Cone Bottom
0.246	0.247	0.248	0.246	6" From Cone Bottom
0.252	**0.249**	**0.252**	**0.247**	**AVERAGE**

UL 142 manuf. min. thickness = 0.240"

TANK 91 (OEPA # T191) - Carbon Steel
HAZARDOUS WASTE-MIX CHLORINATEDS
CONE BOTTOM MEASUREMENTS

NORTH	EAST	WEST	SOUTH
-	-	-	-
0.299	0.308	0.309	0.312
0.307	0.307	0.307	0.309
0.309	0.303	0.304	0.301
0.300	0.300	0.299	0.300
0.304	**0.305**	**0.305**	**0.306**

UL 142 manuf. min. thickness = 0.240"

TANK 92B (OEPA # T110) - Carbon Steel
HAZARDOUS WASTE-MIX CHLORINATEDS
CONE BOTTOM MEASUREMENTS

NORTH	EAST	WEST	SOUTH	
-	-	-	-	4' From Cone Bottom
0.279	0.289	0.297	0.287	3' From Cone Bottom
0.275	0.282	0.295	0.289	24" From Cone Bottom
0.275	0.287	0.301	0.294	12" From Cone Bottom
0.272	0.281	0.279	0.277	6" From Cone Bottom
0.275	**0.285**	**0.293**	**0.287**	**AVERAGE**

UL 142 manuf. min. thickness = 0.240"

TANK 93 (OEPA # T193) - Carbon Steel
HAZARDOUS WASTE-MIX CHLORINATEDS
CONE BOTTOM MEASUREMENTS

NORTH	EAST	WEST	SOUTH
-	-	-	-
0.308	0.301	0.316	0.312
0.309	0.298	0.313	0.309
0.308	0.297	0.306	0.310
0.314	0.308	0.306	0.307
0.310	**0.301**	**0.310**	**0.310**

UL 142 manuf. min. thickness = 0.240"

TANK 94B (OEPA # T111) - Carbon Steel
HAZARDOUS WASTE-MIX CHLORINATEDS
CONE BOTTOM MEASUREMENTS

NORTH	EAST	WEST	SOUTH	
-	-	-	-	4' From Cone Bottom
0.285	0.287	0.294	0.289	3' From Cone Bottom
0.281	0.284	0.287	0.284	24" From Cone Bottom
0.274	0.281	0.289	0.277	12" From Cone Bottom
0.273	0.279	0.277	0.283	6" From Cone Bottom
0.278	**0.283**	**0.287**	**0.283**	**AVERAGE**

UL 142 manuf. min. thickness = 0.240"

TANK 95 (OEPA # T195) - Carbon Steel
HAZARDOUS WASTE-MIX CHLORINATEDS
CONE BOTTOM MEASUREMENTS

NORTH	EAST	WEST	SOUTH
-	-	-	-
0.246	0.250	0.250	0.251
0.249	0.249	0.251	0.249
0.249	0.249	0.257	0.252
0.255	0.255	0.244	0.259
0.250	**0.251**	**0.251**	**0.253**

UL 142 manuf. min. thickness = 0.240"

TANK 100 (OEPA # T200) - Stainless Steel
HAZARDOUS WASTE-MIX CHLORINATEDS
CONE BOTTOM MEASUREMENTS

NORTH	EAST	WEST	SOUTH	
-	-	-	-	
0.247	0.249	0.250	0.249	4' From Cone Bottom
0.247	0.242	0.247	0.243	3' From Cone Bottom
0.239	0.241	0.242	0.241	24" From Cone Bottom
0.234	0.237	0.236	0.236	12" From Cone Bottom
0.242	**0.242**	**0.244**	**0.242**	6" From Cone Bottom
UL 142 manuf. min. thickness = 0.158"				**AVERAGE**

TANK 101 (OEPA # T201) - Carbon Steel
HAZARDOUS WASTE-MIX CHLORINATEDS
CONE BOTTOM MEASUREMENTS

NORTH	EAST	WEST	SOUTH
-	-	-	-
0.291	0.294	0.293	0.292
0.290	0.294	0.287	0.297
0.291	0.294	0.294	0.289
0.292	0.318	0.295	0.291
0.291	**0.300**	**0.292**	**0.292**
UL 142 manuf. min. thickness = 0.240"			

TANK 102A (OEPA # T202) - Carbon Steel
HAZARDOUS WASTE-MIX CHLORINATEDS
CONE BOTTOM MEASUREMENTS

NORTH	EAST	WEST	SOUTH	
-	-	-	-	4' From Cone Bottom
0.226	0.226	0.227	0.221	3' From Cone Bottom
0.215	0.223	0.224	0.219	24" From Cone Bottom
0.210	0.208	0.210	0.211	12" From Cone Bottom
0.193	0.203	0.201	0.193	6" From Cone Bottom
0.211	**0.215**	**0.216**	**0.211**	**AVERAGE**
UL 142 manuf. min. thickness = 0.240"				

TANK 102B (OEPA # T112) - Carbon Steel
HAZARDOUS WASTE-MIX CHLORINATEDS
CONE BOTTOM MEASUREMENTS

NORTH	EAST	WEST	SOUTH
-	-	-	-
0.271	0.279	0.284	0.282
0.284	0.282	0.281	0.289
0.281	0.279	0.286	0.291
0.275	0.281	0.279	0.284
0.278	**0.280**	**0.283**	**0.287**
UL 142 manuf. min. thickness = 0.240"			

TANK 103 (OEPA # T203) - Stainless Steel
HAZARDOUS WASTE-MIX CHLORINATEDS
CONE BOTTOM MEASUREMENTS

NORTH	EAST	WEST	SOUTH	
-	-	-	-	4' From Cone Bottom
-	-	-	-	3' From Cone Bottom
0.279	0.287	0.281	0.279	24" From Cone Bottom
0.275	0.281	0.280	0.274	12" From Cone Bottom
0.271	0.276	0.269	0.273	6" From Cone Bottom
0.275	**0.281**	**0.277**	**0.275**	**AVERAGE**
UL 142 manuf. min. thickness = 0.158"				

TANK 104 (OEPA # T204) - Stainless Steel
HAZARDOUS WASTE-CHLORINATED Q.C.
CONE BOTTOM MEASUREMENTS

NORTH	EAST	WEST	SOUTH
-	-	-	-
0.231	0.247	0.248	0.245
0.234	0.246	0.248	0.241
0.237	0.246	0.246	0.237
0.246	0.245	0.245	0.246
0.237	**0.246**	**0.247**	**0.242**
UL 142 manuf. min. thickness = 0.158"			

TANK 105 (OEPA # T205) - Carbon Steel
HAZARDOUS WASTE-MIX CHLORINATEDS
CONE BOTTOM MEASUREMENTS

NORTH	EAST	WEST	SOUTH	
-	-	-	-	4' From Cone Bottom
0.308	0.306	0.309	0.314	3' From Cone Bottom
0.297	0.294	0.293	0.285	24" From Cone Bottom
0.302	0.296	0.304	0.219	12" From Cone Bottom
0.294	0.294	0.295	0.324	6" From Cone Bottom
0.300	**0.298**	**0.300**	**0.285**	**AVERAGE**
UL 142 manuf. min. thickness = 0.240"				

TANK 110 (OEPA # T210) - Carbon Steel
HAZARDOUS WASTE-MIX CHLORINATEDS
CONE BOTTOM MEASUREMENTS

NORTH	EAST	WEST	SOUTH
-	-	-	-
0.242	0.241	0.247	0.240
0.242	0.239	0.246	0.238
0.238	0.239	0.249	0.235
0.242	0.239	0.248	0.236
0.241	**0.240**	**0.248**	**0.237**
UL 142 manuf. min. thickness = 0.240"			

TANK 114 (OEPA # T214) - Carbon Steel HAZARDOUS WASTE-CHLORINATED Q.C. CONE BOTTOM MEASUREMENTS				
NORTH	EAST	WEST	SOUTH	
-	-	-	-	4' From Cone Bottom
0.248	0.242	0.242	0.248	3' From Cone Bottom
0.242	0.242	0.243	0.242	24" From Cone Bottom
0.235	0.241	0.241	0.241	12" From Cone Bottom
0.224	0.237	0.239	0.235	6" From Cone Bottom
0.237	0.241	0.241	0.242	AVERAGE
UL 142 manuf. min. thickness = 0.240"				

TANK 127 (OEPA # T227) - Carbon Steel HAZARDOUS WASTE-MIX CHLORINATEDS CONE BOTTOM MEASUREMENTS			
NORTH	EAST	WEST	SOUTH
0.287	0.324	0.309	0.319
0.299	0.334	0.308	0.305
0.299	0.318	0.307	0.307
0.298	0.313	0.322	0.308
0.297	0.298	0.312	0.322
0.296	0.317	0.312	0.312
UL 142 manuf. min. thickness = 0.240"			

Tank # 49 (OEPA ID # T149) Hazardous Waste - Cooker Overheads(10K) - Shell Thickness Data Summary

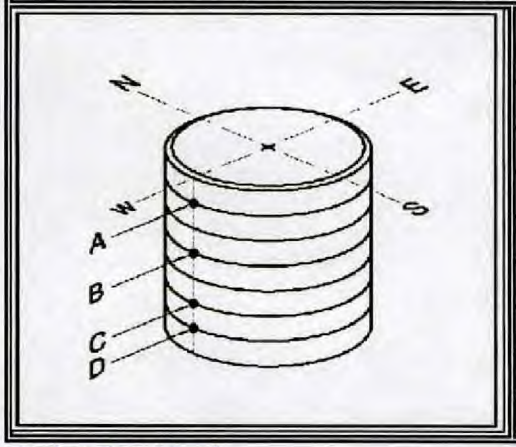

	NORTH	NORTH EAST	WEST	NORTH WEST	SOUTH	SOUTH WEST	EAST	SOUTH EAST
TOP	-	-	-	-	-	-	-	-
A	0.293	0.298	0.286	0.292	0.293	0.292	0.286	0.305
B	0.287	0.290	0.303	0.299	0.289	0.304	0.298	0.291
C	0.303	0.293	0.290	0.309	0.306	0.278	0.309	0.309
D	Alum Wrap	Alum Wrap	Alum Wrap	Alum Wrap	Alum Wrap	Alum Wrap	Alum Wrap	Alum Wrap
E	Alum Wrap	Alum Wrap	Alum Wrap	Alum Wrap	Alum Wrap	Alum Wrap	Alum Wrap	Alum Wrap
F	Alum Wrap	Alum Wrap	Alum Wrap	Alum Wrap	Alum Wrap	Alum Wrap	Alum Wrap	Alum Wrap
Average	0.294	0.294	0.293	0.300	0.296	0.291	0.298	0.302

Carbon Steel Tank

UL 142 manuf. min. thickness = 0.167"

A = 7' up from the bottom
B = 6' up from the bottom
C = 5' up from the bottom
D = 24" up from the bottom
E = 12" up from the bottom
F = 6" up from the bottom

Tank # 50 (OEPA ID # T150) Hazardous Waste - Cooker Overheads(10K) - Shell Thickness Data Summary

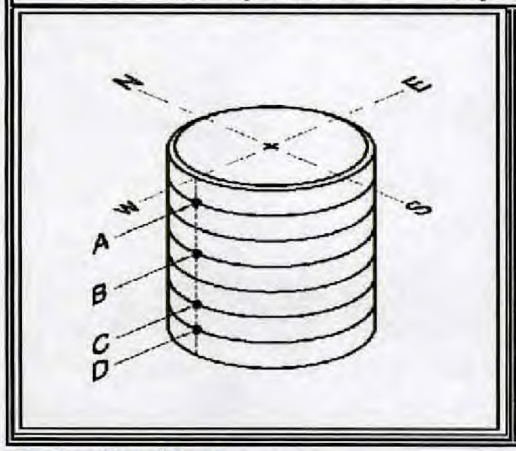

	NORTH	NORTH EAST	WEST	NORTH WEST	SOUTH	SOUTH WEST	EAST	SOUTH EAST
TOP	-	-	-	-	-	-	-	-
A	0.321	0.284	0.301	0.313	0.311	0.288	0.287	0.324
B	0.289	0.284	0.326	0.327	0.320	0.328	0.328	0.319
C	0.286	0.283	0.281	0.287	0.283	0.288	0.290	0.328
D	Alum Wrap	Alum Wrap	Alum Wrap	Alum Wrap	Alum Wrap	Alum Wrap	Alum Wrap	Alum Wrap
E	Alum Wrap	Alum Wrap	Alum Wrap	Alum Wrap	Alum Wrap	Alum Wrap	Alum Wrap	Alum Wrap
F	Alum Wrap	Alum Wrap	Alum Wrap	Alum Wrap	Alum Wrap	Alum Wrap	Alum Wrap	Alum Wrap
Average	0.299	0.284	0.303	0.309	0.305	0.301	0.302	0.324

Carbon Steel Tank

UL 142 manuf. min. thickness = 0.167"

A = 7' up from the bottom
B = 6' up from the bottom
C = 5' up from the bottom
D = 24" up from the bottom
E = 12" up from the bottom
F = 6" up from the bottom

Tank # 51 (OEPA ID # T151) Hazardous Waste - Recycled M/S (30K) - Shell Thickness Data Summary

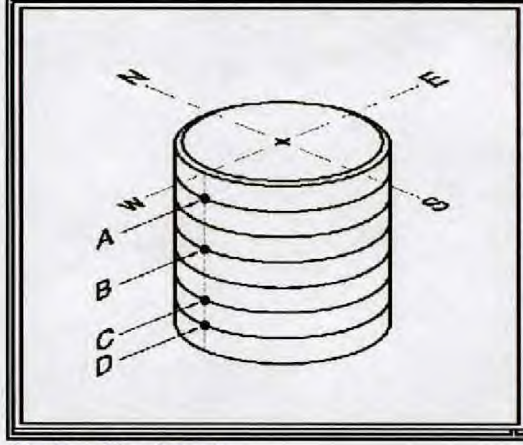

	NORTH	NORTH EAST	WEST	NORTH WEST	SOUTH	SOUTH WEST	EAST	SOUTH EAST
TOP	-	-	-	-	-	-	-	-
A	0.235	0.221	0.240	0.236	0.236	0.247	0.241	0.248
B	0.252	0.225	0.230	0.235	0.234	0.258	0.253	0.228
C	0.238	0.225	0.235	0.238	0.247	0.260	0.247	0.243
D	0.253	0.264	0.236	0.242	0.247	0.247	0.228	0.229
E	0.255	0.245	0.248	0.239	0.226	0.238	0.265	0.258
F	0.263	0.254	0.249	0.241	0.242	0.242	0.271	0.261
Average	0.249	0.239	0.240	0.239	0.239	0.249	0.251	0.245

Carbon Steel Tank

UL 142 manuf. min. thickness = 0.167"

A = 7' up from the bottom
B = 6' up from the bottom
C = 5' up from the bottom
D = 24" up from the bottom
E = 12" up from the bottom
F = 6" up from the bottom

Tank # 52 (OEPA ID # T150) Hazardous Waste - Recycled M/S (30K) - Shell Thickness Data Summary

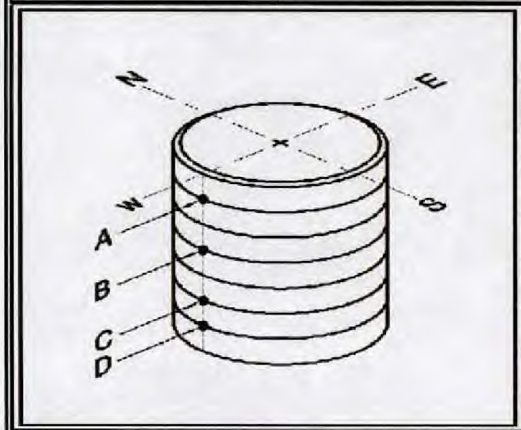

	NORTH	NORTH EAST	WEST	NORTH WEST	SOUTH	SOUTH WEST	EAST	SOUTH EAST
TOP	-	-	-	-	-	-	-	-
A	0.226	0.247	0.232	0.226	0.263	0.275	0.257	0.266
B	0.228	0.220	0.235	0.223	0.266	0.272	0.259	0.264
C	0.227	0.242	0.226	0.223	0.277	0.270	0.258	0.272
D	0.226	0.242	0.223	0.228	0.266	0.259	0.253	0.274
E	0.223	0.213	0.224	0.215	0.255	0.247	0.255	0.258
F	0.268	0.285	0.253	0.254	0.264	0.264	0.284	0.259
Average	0.233	0.242	0.232	0.228	0.265	0.265	0.261	0.266

Carbon Steel Tank

UL 142 manuf. min. thickness = 0.167"

A = 7' up from the bottom
B = 6' up from the bottom
C = 5' up from the bottom
D = 24" up from the bottom
E = 12" up from the bottom
F = 6" up from the bottom

Tank # 53 (OEPA ID # T153) Hazardous Waste - Recycled M/S (30K) - Shell Thickness Data Summary

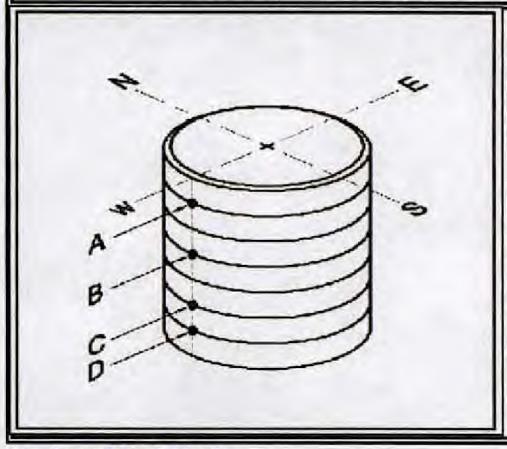

	NORTH	NORTH EAST	WEST	NORTH WEST	SOUTH	SOUTH WEST	EAST	SOUTH EAST
TOP	-	-	-	-	-	-	-	-
A	0.213	0.203	0.196	0.194	0.225	0.243	0.218	0.195
B	0.220	0.191	0.187	0.197	0.227	0.182	0.183	0.231
C	0.219	0.233	0.233	0.229	0.208	0.199	0.209	0.207
D	0.235	0.235	0.233	0.231	0.203	0.194	0.206	0.221
E	0.227	0.236	0.214	0.235	0.214	0.208	0.187	0.231
F	0.254	0.250	0.214	0.245	0.236	0.242	0.247	0.190
Average	0.228	0.225	0.213	0.222	0.219	0.211	0.208	0.213

Carbon Steel Tank
UL 142 manuf. min. thickness = 0.167"

A = 7' up from the bottom
B = 6' up from the bottom
C = 5' up from the bottom
D = 24" up from the bottom
E = 12" up from the bottom
F = 6" up from the bottom

Tank # 59 (OEPA ID # T159) Hazardous Waste - Recycled M/S (30K) - Shell Thickness Data Summary

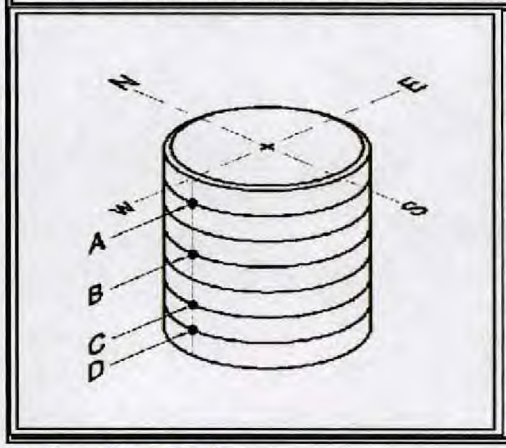

	NORTH	NORTH EAST	WEST	NORTH WEST	SOUTH	SOUTH WEST	EAST	SOUTH EAST
TOP	-	-	-	-	-	-	-	-
A	0.237	0.230	0.235	0.256	0.236	0.234	0.229	0.232
B	0.264	0.227	0.232	0.232	0.268	0.227	0.230	0.247
C	0.238	0.226	0.234	0.242	0.238	0.237	0.225	0.250
D	0.263	0.262	0.236	0.229	0.239	0.235	0.239	0.232
E	0.242	0.264	0.238	0.239	0.251	0.238	0.259	0.238
F	0.266	0.276	0.268	0.274	0.267	0.229	0.271	0.233
Average	0.252	0.248	0.241	0.245	0.250	0.233	0.242	0.239

Carbon Steel Tank
UL 142 manuf. min. thickness = 0.167"

A = 7' up from the bottom
B = 6' up from the bottom
C = 5' up from the bottom
D = 24" up from the bottom
E = 12" up from the bottom
F = 6" up from the bottom

Tank # 60 (OEPA ID # T159) Hazardous Waste - Recycled M/S (30K) - Shell Thickness Data Summary

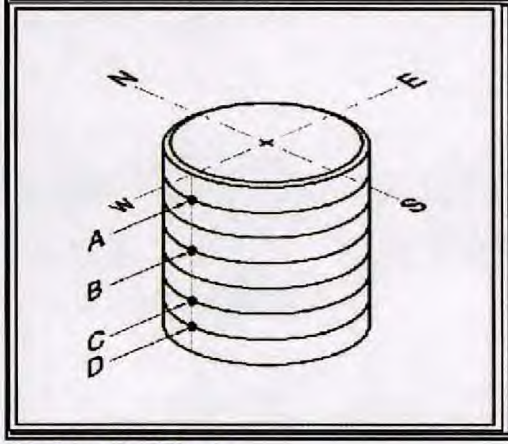

	NORTH	NORTH EAST	WEST	NORTH WEST	SOUTH	SOUTH WEST	EAST	SOUTH EAST
TOP	-	-	-	-	-	-	-	-
A	0.227	0.229	0.231	0.232	0.230	0.238	0.257	0.243
B	0.226	0.219	0.255	0.232	0.249	0.227	0.259	0.231
C	0.225	0.230	0.225	0.257	0.253	0.223	0.256	0.227
D	0.241	0.230	0.250	0.256	0.232	0.260	0.254	0.233
E	0.231	0.233	0.264	0.231	0.256	0.258	0.259	0.257
F	0.277	0.264	0.262	0.258	0.263	0.259	0.257	0.231
Average	0.238	0.234	0.248	0.244	0.247	0.244	0.257	0.237

Carbon Steel Tank

UL 142 manuf. min. thickness = 0.167"

A = 7' up from the bottom
B = 6' up from the bottom
C = 5' up from the bottom
D = 24" up from the bottom
E = 12" up from the bottom
F = 6" up from the bottom

Tank # 61 (OEPA ID # T161) Hazardous Waste (20K) - Shell Thickness Data Summary

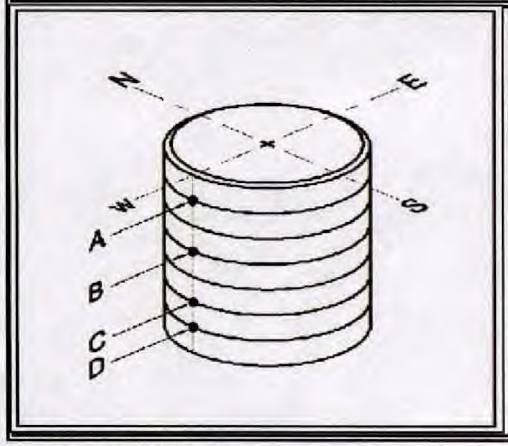

	NORTH	NORTH EAST	WEST	NORTH WEST	SOUTH	SOUTH WEST	EAST	SOUTH EAST
TOP	-	-	-	-	-	-	-	-
A	0.254	0.252	0.253	0.235	0.253	0.254	0.258	0.257
B	0.251	0.227	0.250	0.250	0.249	0.251	0.254	0.249
C	0.251	0.227	0.249	0.251	0.250	0.252	0.249	0.248
D	0.249	0.250	0.249	0.252	0.251	0.251	0.248	0.251
E	0.249	0.251	0.249	0.250	0.252	0.249	0.250	0.251
F	0.252	0.254	0.253	0.254	0.253	0.252	0.253	0.254
Average	0.251	0.244	0.251	0.249	0.251	0.252	0.252	0.252

Carbon Steel Tank

UL 142 manuf. min. thickness = 0.167"

A = 7' up from the bottom
B = 6' up from the bottom
C = 5' up from the bottom
D = 24" up from the bottom
E = 12" up from the bottom
F = 6" up from the bottom

Tank # 64 (OEPA ID # T164) Hazardous Waste - Recycled M/S (20K) - Shell Thickness Data Summary

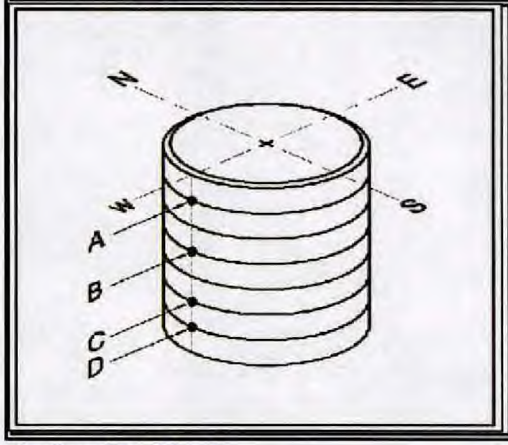

	NORTH	NORTH EAST	WEST	NORTH WEST	SOUTH	SOUTH WEST	EAST	SOUTH EAST
TOP	-	-	-	-	-	-	-	-
A	0.311	0.298	0.333	0.317	0.311	0.314	0.293	0.296
B	0.297	0.295	0.296	0.294	0.297	0.295	0.298	0.301
C	0.302	0.300	0.300	0.301	0.296	0.296	0.300	0.299
D	0.332	0.302	0.297	0.299	0.309	0.303	0.324	0.314
E	0.327	0.332	0.306	0.321	0.315	0.313	0.312	0.311
F	0.334	0.335	0.324	0.339	0.333	0.336	0.335	0.339
Average	**0.317**	**0.310**	**0.309**	**0.312**	**0.310**	**0.310**	**0.310**	**0.310**

Carbon Steel Tank

UL 142 manuf. min. thickness = 0.167"

A = 7' up from the bottom
B = 6' up from the bottom
C = 5' up from the bottom
D = 24" up from the bottom
E = 12" up from the bottom
F = 6" up from the bottom

Tank # 68 (OEPA ID # T168) Hazardous Waste - Recycled M/S (30K) - Shell Thickness Data Summary

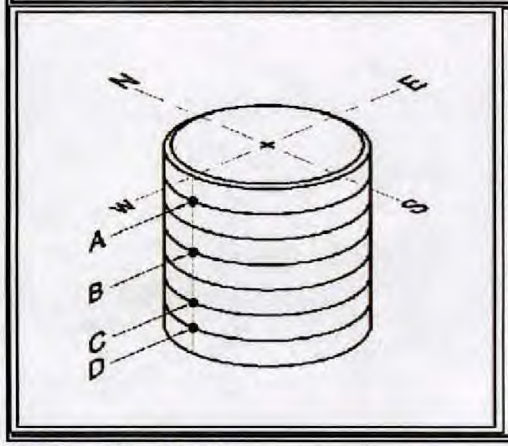

	NORTH	NORTH EAST	WEST	NORTH WEST	SOUTH	SOUTH WEST	EAST	SOUTH EAST
TOP	-	-	-	-	-	-	-	-
A	0.241	0.233	0.218	0.247	0.228	0.220	0.222	0.225
B	0.244	0.248	0.221	0.269	0.260	0.219	0.215	0.259
C	0.251	0.249	0.215	0.271	0.264	0.227	0.221	0.270
D	0.253	0.259	0.262	0.249	0.263	0.228	0.224	0.223
E	0.259	0.250	0.231	0.253	0.258	0.221	0.227	0.227
F	0.267	0.274	0.231	0.263	0.280	0.267	0.233	0.274
Average	**0.253**	**0.252**	**0.230**	**0.259**	**0.259**	**0.230**	**0.224**	**0.246**

Carbon Steel Tank

UL 142 manuf. min. thickness = 0.167"

A = 7' up from the bottom
B = 6' up from the bottom
C = 5' up from the bottom
D = 24" up from the bottom
E = 12" up from the bottom
F = 6" up from the bottom

Tank # 98 (OEPA ID # T198) Hazardous Waste - Waste Fuel (20K) - Shell Thickness Data Summary

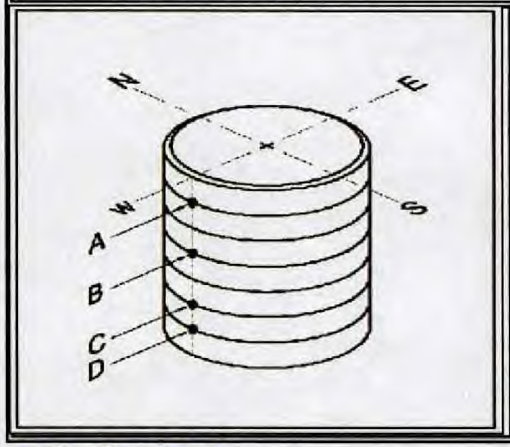

	NORTH	NORTH EAST	WEST	NORTH WEST	SOUTH	SOUTH WEST	EAST	SOUTH EAST
TOP	-	-	-	-	-	-	-	-
A	0.192	0.191	0.194	0.191	0.188	0.193	0.196	0.198
B	0.194	0.192	0.190	0.186	0.187	0.192	0.194	0.198
C	0.199	0.193	0.196	0.199	0.195	0.197	0.192	0.201
D	0.202	0.208	0.201	0.201	0.204	0.203	0.195	0.204
E	0.209	0.210	0.209	0.206	0.209	0.207	0.209	0.210
F	0.214	0.209	0.213	0.214	0.215	0.217	0.211	0.214
Average	0.202	0.201	0.201	0.200	0.200	0.202	0.200	0.204

Carbon Steel Tank

UL 142 manuf. min. thickness = 0.167"

A = 7' up from the bottom
B = 6' up from the bottom
C = 5' up from the bottom
D = 24" up from the bottom
E = 12" up from the bottom
F = 6" up from the bottom

Tank # 106 (OEPA ID # T206) Hazardous Waste - Perchloroethylene (30K) - Shell Thickness Data Summary

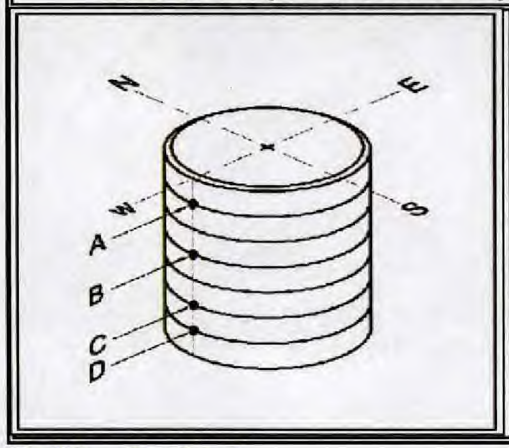

	NORTH	NORTH EAST	WEST	NORTH WEST	SOUTH	SOUTH WEST	EAST	SOUTH EAST
TOP	-	-	-	-	-	-	-	-
A	Alum Wrap	Alum Wrap	Alum Wrap	Alum Wrap	Alum Wrap	Alum Wrap	Alum Wrap	0.187
B	Alum Wrap	Alum Wrap	Alum Wrap	Alum Wrap	Alum Wrap	Alum Wrap	Alum Wrap	Alum Wrap
C	Alum Wrap	Alum Wrap	Alum Wrap	Alum Wrap	Alum Wrap	Alum Wrap	Alum Wrap	0.246
D	Alum Wrap	Alum Wrap	Alum Wrap	Alum Wrap	Alum Wrap	Alum Wrap	Alum Wrap	Alum Wrap
E	Alum Wrap	Alum Wrap	Alum Wrap	Alum Wrap	Alum Wrap	Alum Wrap	Alum Wrap	Alum Wrap
F	Alum Wrap	Alum Wrap	Alum Wrap	Alum Wrap	Alum Wrap	Alum Wrap	Alum Wrap	Alum Wrap
Average	-	-	-	-	-	-	-	-

Stainless Steel Tank

UL 142 manuf. min. thickness = 0.115"

A = 7' up from the bottom
B = 6' up from the bottom
C = 5' up from the bottom
D = 24" up from the bottom
E = 12" up from the bottom
F = 6" up from the bottom

Tank # 107 (OEPA ID # T207) Hazardous Waste - Perchloroethylene (30K) - Shell Thickness Data Summary

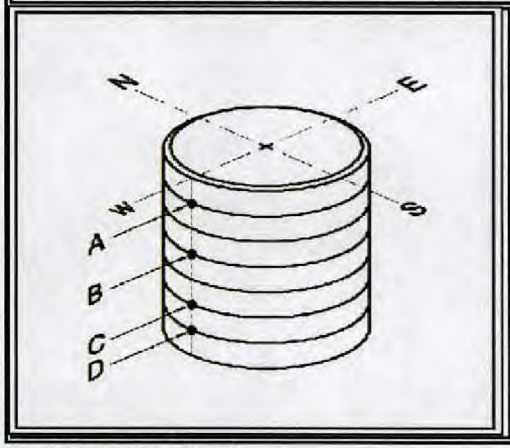

	NORTH	NORTH EAST	WEST	NORTH WEST	SOUTH	SOUTH WEST	EAST	SOUTH EAST
TOP	-	-	-	-	-	-	-	-
A	0.167	0.169	0.177	0.172	0.179	0.176	0.176	0.176
B	0.174	0.174	0.180	0.180	0.182	0.177	0.177	0.177
C	0.172	0.173	0.179	0.177	0.183	0.177	0.177	0.178
D	0.243	0.244	0.244	0.242	0.244	0.243	0.244	0.244
E	0.247	0.244	0.247	0.242	0.247	0.246	0.248	0.247
F	0.246	0.242	0.237	0.241	0.246	0.245	0.245	0.244
Average	0.208	0.208	0.211	0.209	0.214	0.211	0.211	0.211

Stainless Steel Tank

UL 142 manuf. min. thickness = 0.115"

A = 7' up from the bottom
B = 6' up from the bottom
C = 5' up from the bottom
D = 24" up from the bottom
E = 12" up from the bottom
F = 6" up from the bottom

Tank # 111 (OEPA ID # T211) Hazardous Waste - Mixed Chloroinateds (30K) - Shell Thickness Data Summary

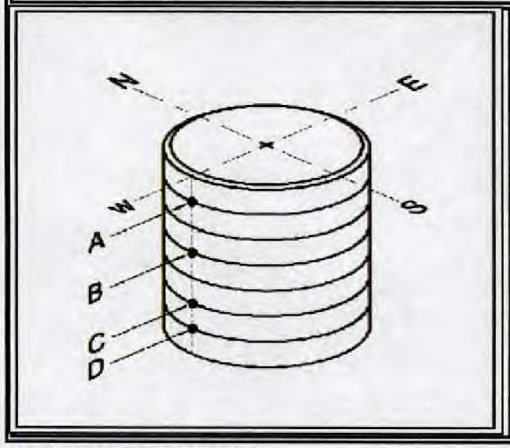

	NORTH	NORTH EAST	WEST	NORTH WEST	SOUTH	SOUTH WEST	EAST	SOUTH EAST
TOP	-	-	-	-	-	-	-	-
A	0.178	0.177	0.179	0.176	0.177	0.178	0.178	0.177
B	0.177	0.178	0.177	0.176	0.177	0.177	0.178	0.177
C	0.176	0.177	0.178	0.177	0.177	0.176	0.177	0.176
D	0.252	0.253	0.253	0.253	0.257	0.257	0.255	0.253
E	0.250	0.251	0.257	0.254	0.252	0.255	0.249	0.252
F	0.251	0.251	0.254	0.253	0.252	0.250	0.250	0.253
Average	0.214	0.215	0.216	0.215	0.215	0.216	0.215	0.215

Stainless Steel Tank

UL 142 manuf. min. thickness = 0.115"

A = 7' up from the bottom
B = 6' up from the bottom
C = 5' up from the bottom
D = 24" up from the bottom
E = 12" up from the bottom
F = 6" up from the bottom

Tank # 112 (OEPA ID # T212) Hazardous Waste - Mixed Chloroinateds (30K) - Shell Thickness Data Summary

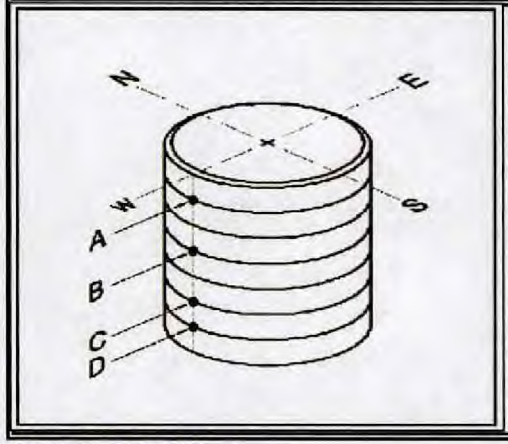

	NORTH	NORTH EAST	WEST	NORTH WEST	SOUTH	SOUTH WEST	EAST	SOUTH EAST
TOP	-	-	-	-	-	-	-	-
A	0.177	0.177	0.176	0.178	0.177	0.177	0.177	0.177
B	0.177	0.176	0.178	0.177	0.179	0.176	0.178	0.177
C	0.177	0.177	0.178	0.177	0.177	0.176	0.177	0.177
D	0.253	0.249	0.247	0.264	0.271	0.262	0.247	0.254
E	0.249	0.249	0.250	0.251	0.255	0.259	0.251	0.251
F	0.251	0.253	0.255	0.251	0.252	0.253	0.250	0.251
Average	**0.214**	**0.214**	**0.214**	**0.216**	**0.219**	**0.217**	**0.213**	**0.215**

Stainless Steel Tank

UL 142 manuf. min. thickness = 0.115"

A = 7' up from the bottom
B = 6' up from the bottom
C = 5' up from the bottom
D = 24" up from the bottom
E = 12" up from the bottom
F = 6" up from the bottom

Tank # 113 (OEPA ID # T213) Hazardous Waste - Chloroinated Q. C. (15K) - Shell Thickness Data Summary

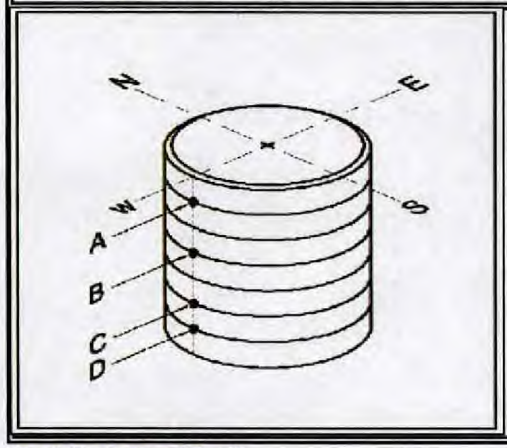

	NORTH	NORTH EAST	WEST	NORTH WEST	SOUTH	SOUTH WEST	EAST	SOUTH EAST
TOP	-	-	-	-	-	-	-	-
A	0.177	0.177	0.178	0.177	0.178	0.176	0.178	0.178
B	0.178	0.178	0.179	0.177	0.178	0.178	0.179	0.177
C	0.178	0.177	0.178	0.177	0.177	0.178	0.178	0.177
D	0.247	0.247	0.247	0.248	0.247	0.245	0.245	0.243
E	0.252	0.250	0.251	0.250	0.251	0.251	0.251	0.249
F	0.248	0.248	0.251	0.251	0.251	0.249	0.249	0.249
Average	**0.213**	**0.213**	**0.214**	**0.213**	**0.214**	**0.213**	**0.213**	**0.212**

Stainless Steel Tank

UL 142 manuf. min. thickness = 0.115"

A = 7' up from the bottom
B = 6' up from the bottom
C = 5' up from the bottom
D = 24" up from the bottom
E = 12" up from the bottom
F = 6" up from the bottom

Tank # 125 (OEPA ID # T225) Hazardous Waste - Methylene Chloride (20K) - Shell Thickness Data Summary

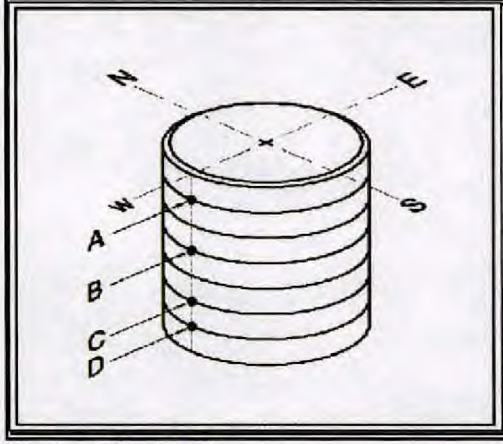

	NORTH	NORTH EAST	WEST	NORTH WEST	SOUTH	SOUTH WEST	EAST	SOUTH EAST
TOP	-	-	-	-	-	-	-	-
A	0.292	0.293	0.299	0.291	0.301	0.302	0.299	0.306
B	0.290	0.294	0.297	0.296	0.303	0.301	0.298	0.305
C	0.288	0.291	0.294	0.285	0.293	0.294	0.323	0.298
D	0.289	0.291	0.285	0.288	0.282	0.298	0.301	0.312
E	0.286	0.289	0.293	0.291	0.287	0.289	0.309	0.296
F	0.297	0.311	0.305	0.299	0.308	0.289	0.334	0.289
Average	**0.290**	**0.295**	**0.296**	**0.292**	**0.296**	**0.296**	**0.311**	**0.301**

Carbon Steel Tank

UL 142 manuf. min. thickness = 0.167"

A = 7' up from the bottom
B = 6' up from the bottom
C = 5' up from the bottom
D = 24" up from the bottom
E = 12" up from the bottom
F = 6" up from the bottom

Tank # 126 (OEPA ID # T226) Hazardous Waste - Methylene Chloride (20K) - Shell Thickness Data Summary

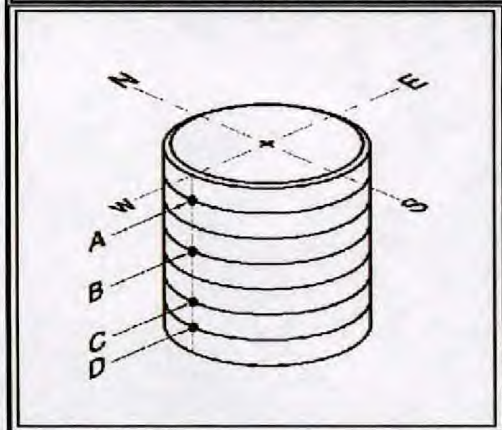

	NORTH	NORTH EAST	WEST	NORTH WEST	SOUTH	SOUTH WEST	EAST	SOUTH EAST
TOP	-	-	-	-	-	-	-	-
A	0.307	0.307	0.305	0.278	0.281	0.294	0.294	0.294
B	0.282	0.293	0.278	0.279	0.293	0.293	0.293	0.294
C	0.294	0.293	0.232	0.277	0.295	0.292	0.293	0.292
D	0.310	0.295	0.288	0.289	0.285	0.289	0.294	0.289
E	0.289	0.297	0.286	0.285	0.296	0.295	0.286	0.296
F	0.311	0.290	0.287	0.285	0.296	0.296	0.297	0.297
Average	**0.299**	**0.296**	**0.279**	**0.282**	**0.291**	**0.293**	**0.293**	**0.294**

Carbon Steel Tank

UL 142 manuf. min. thickness = 0.167"

A = 7' up from the bottom
B = 6' up from the bottom
C = 5' up from the bottom
D = 24" up from the bottom
E = 12" up from the bottom
F = 6" up from the bottom

Tank # 130 (OEPA ID # T230) Hazardous Waste - Trichloroethylene (20K) - Shell Thickness Data Summary

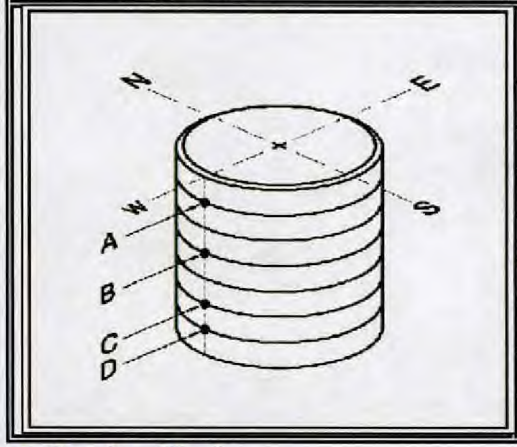

	NORTH	NORTH EAST	WEST	NORTH WEST	SOUTH	SOUTH WEST	EAST	SOUTH EAST
TOP	-	-	-	-	-	-	-	-
A	0.304	0.299	0.292	0.304	0.307	0.308	0.302	0.315
B	0.303	0.306	0.313	0.310	0.308	0.301	0.302	0.300
C	0.297	0.297	0.295	0.292	0.294	0.293	0.295	0.294
D	0.296	0.890	0.295	0.289	0.266	0.291	0.294	0.292
E	0.288	0.284	0.284	0.287	0.298	0.295	0.292	0.292
F	0.296	0.287	0.284	0.291	0.295	0.295	0.293	0.293
Average	**0.297**	**0.394**	**0.294**	**0.296**	**0.295**	**0.297**	**0.296**	**0.298**

Carbon Steel Tank

UL 142 manuf. min. thickness = 0.167"

A = 7' up from the bottom
B = 6' up from the bottom
C = 5' up from the bottom
D = 24" up from the bottom
E = 12" up from the bottom
F = 6" up from the bottom

Tank # 131 (OEPA ID # T231) Hazardous Waste - Perchloroethylene (20K) - Shell Thickness Data Summary

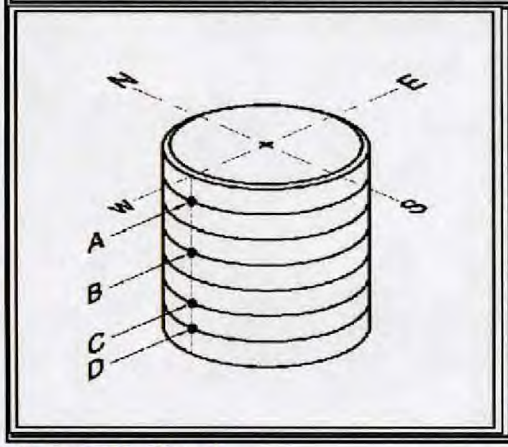

	NORTH	NORTH EAST	WEST	NORTH WEST	SOUTH	SOUTH WEST	EAST	SOUTH EAST
TOP	-	-	-	-	-	-	-	-
A	0.324	0.289	0.301	0.299	0.311	0.330	0.307	0.321
B	0.321	0.296	0.299	0.299	0.323	0.335	0.336	0.336
C	0.323	0.334	0.295	0.292	0.297	0.295	0.296	0.297
D	0.295	0.296	0.317	0.293	0.297	0.295	0.298	0.296
E	0.327	0.314	0.340	0.298	0.295	0.297	0.295	0.297
F	0.293	0.314	0.305	0.343	0.293	0.292	0.298	0.294
Average	**0.314**	**0.307**	**0.310**	**0.304**	**0.303**	**0.307**	**0.305**	**0.307**

Carbon Steel Tank

UL 142 manuf. min. thickness = 0.167"

A = 7' up from the bottom
B = 6' up from the bottom
C = 5' up from the bottom
D = 24" up from the bottom
E = 12" up from the bottom
F = 6" up from the bottom

Tank # 132 (OEPA ID # T232) Hazardous Waste - Perchloroethylene (20K) - Shell Thickness Data Summary

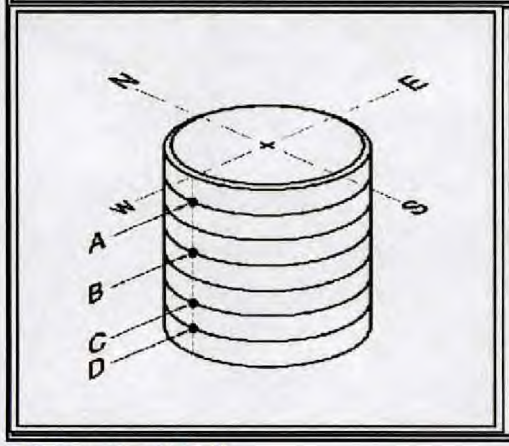

	NORTH	NORTH EAST	WEST	NORTH WEST	SOUTH	SOUTH WEST	EAST	SOUTH EAST
TOP	-	-	-	-	-	-	-	-
A	0.299	0.299	0.295	0.299	0.304	0.301	0.302	0.301
B	0.299	0.300	0.303	0.303	0.300	0.302	0.327	0.304
C	0.300	0.299	0.299	0.010	0.302	0.301	0.301	0.302
D	0.307	0.294	0.301	0.302	0.301	0.310	0.313	0.319
E	0.310	0.307	0.306	0.305	0.303	0.307	0.319	0.324
F	0.326	0.323	0.324	0.321	0.304	0.312	0.313	0.321
Average	**0.307**	**0.304**	**0.305**	**0.257**	**0.302**	**0.306**	**0.313**	**0.312**

Carbon Steel Tank

UL 142 manuf. min. thickness = 0.167"

A = 7' up from the bottom
B = 6' up from the bottom
C = 5' up from the bottom
D = 24" up from the bottom
E = 12" up from the bottom
F = 6" up from the bottom

Tank # 135 (OEPA ID # T235) Hazardous Waste - Perchloroethylene (20K) - Shell Thickness Data Summary

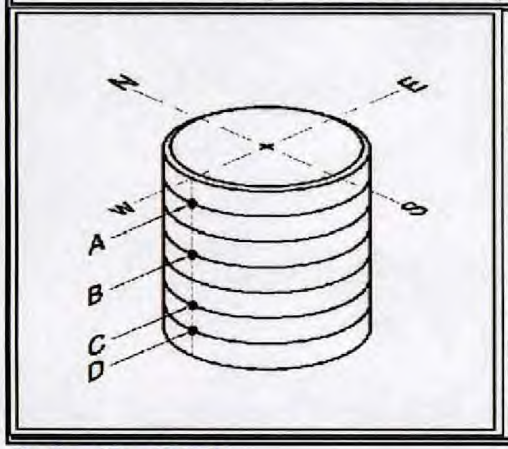

	NORTH	NORTH EAST	WEST	NORTH WEST	SOUTH	SOUTH WEST	EAST	SOUTH EAST
TOP	-	-	-	-	-	-	-	-
A	0.305	0.320	0.309	0.305	0.307	0.305	0.305	0.301
B	0.302	0.325	0.302	0.302	0.302	0.301	0.304	0.297
C	0.301	0.302	0.302	0.301	0.302	0.327	0.306	0.303
D	0.302	0.303	0.317	0.303	0.322	0.324	0.298	0.299
E	0.302	0.302	0.324	0.325	0.308	0.308	0.297	0.302
F	0.331	0.327	0.325	0.305	0.319	0.319	0.298	0.303
Average	**0.307**	**0.313**	**0.313**	**0.307**	**0.310**	**0.314**	**0.301**	**0.301**

Carbon Steel Tank

UL 142 manuf. min. thickness = 0.167"

A = 7' up from the bottom
B = 6' up from the bottom
C = 5' up from the bottom
D = 24" up from the bottom
E = 12" up from the bottom
F = 6" up from the bottom

Tank # 136 (OEPA ID # T236) Hazardous Waste - Perchloroethylene (20K) - Shell Thickness Data Summary

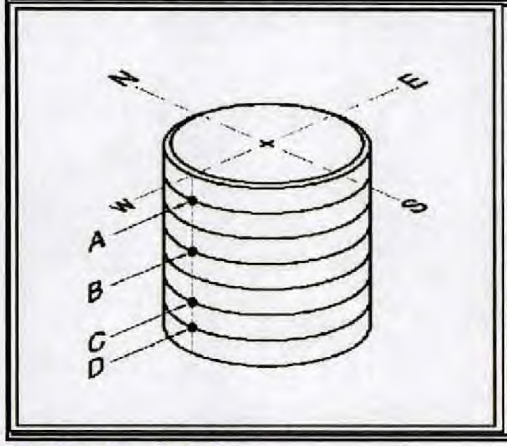

	NORTH	NORTH EAST	WEST	NORTH WEST	SOUTH	SOUTH WEST	EAST	SOUTH EAST
TOP	-	-	-	-	-	-	-	-
A	0.301	0.299	0.296	0.305	0.301	0.299	0.305	0.301
B	0.298	0.295	0.296	0.301	0.295	0.295	0.326	0.298
C	0.298	0.293	0.298	0.298	0.311	0.295	0.295	0.296
D	0.308	0.310	0.301	0.296	0.299	0.293	0.296	0.294
E	0.307	0.299	0.318	0.327	0.321	0.311	0.296	0.299
F	0.314	0.298	0.298	0.313	0.296	0.297	0.310	0.329
Average	**0.304**	**0.299**	**0.301**	**0.307**	**0.304**	**0.298**	**0.305**	**0.303**

Carbon Steel Tank

UL 142 manuf. min. thickness = 0.167"

A = 7' up from the bottom
B = 6' up from the bottom
C = 5' up from the bottom
D = 24" up from the bottom
E = 12" up from the bottom
F = 6" up from the bottom

Tank # 137 (OEPA ID # T237) Hazardous Waste - Perchloroethylene (20K) - Shell Thickness Data Summary

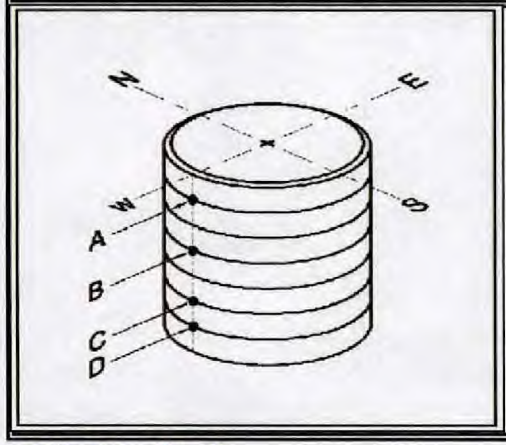

	NORTH	NORTH EAST	WEST	NORTH WEST	SOUTH	SOUTH WEST	EAST	SOUTH EAST
TOP	-	-	-	-	-	-	-	-
A	0.297	0.291	0.287	0.289	0.296	0.294	0.318	0.309
B	0.301	0.289	0.288	0.289	0.303	0.293	0.318	0.311
C	0.299	0.298	0.301	0.303	0.303	0.288	0.293	0.293
D	0.299	0.296	0.304	0.317	0.321	0.300	0.295	0.295
E	0.298	0.298	0.297	0.301	0.321	0.294	0.163	0.294
F	0.310	0.312	0.323	0.322	0.322	0.308	0.294	0.297
Average	**0.301**	**0.297**	**0.300**	**0.304**	**0.311**	**0.296**	**0.280**	**0.300**

Carbon Steel Tank

UL 142 manuf. min. thickness = 0.167"

A = 7' up from the bottom
B = 6' up from the bottom
C = 5' up from the bottom
D = 24" up from the bottom
E = 12" up from the bottom
F = 6" up from the bottom

Tank # 140 (OEPA ID # T240) Hazardous Waste - 1,1,1, - Trichloroethane (20K) - Shell Thickness Data Summary

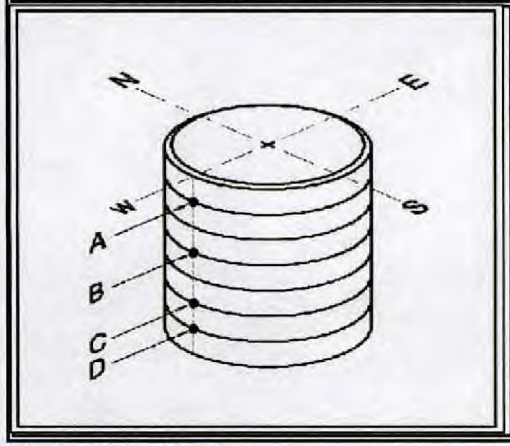

	NORTH	NORTH EAST	WEST	NORTH WEST	SOUTH	SOUTH WEST	EAST	SOUTH EAST
TOP	-	-	-	-	-	-	-	-
A	0.309	0.297	0.314	0.314	0.310	0.307	0.297	0.316
B	0.303	0.296	0.307	0.299	0.275	0.323	0.307	0.309
C	0.296	0.308	0.307	0.340	0.293	0.295	0.293	0.292
D	0.304	0.305	0.307	0.313	0.310	0.301	0.289	0.316
E	0.293	0.305	0.306	0.304	0.311	0.301	0.305	0.296
F	0.302	0.295	0.286	0.301	0.306	0.286	0.296	0.310
Average	**0.301**	**0.301**	**0.305**	**0.312**	**0.301**	**0.302**	**0.298**	**0.307**

Carbon Steel Tank

UL 142 manuf. min. thickness = 0.167"

A = 7' up from the bottom
B = 6' up from the bottom
C = 5' up from the bottom
D = 24" up from the bottom
E = 12" up from the bottom
F = 6" up from the bottom

Tank # 141 (OEPA ID # T241) Hazardous Waste - 1,1,1, - Trichloroethane (20K) - Shell Thickness Data Summary

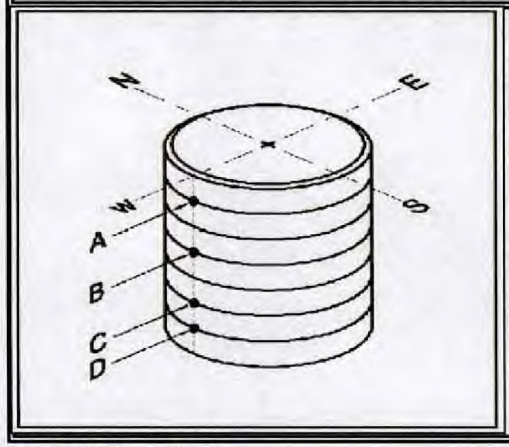

	NORTH	NORTH EAST	WEST	NORTH WEST	SOUTH	SOUTH WEST	EAST	SOUTH EAST
TOP	-	-	-	-	-	-	-	-
A	0.301	0.299	0.321	0.305	0.301	0.305	0.307	0.299
B	0.299	0.297	0.333	0.303	0.299	0.301	0.312	0.296
C	0.296	0.300	0.294	0.294	0.269	0.301	0.299	0.294
D	0.296	0.297	0.290	0.295	0.314	0.298	0.296	0.296
E	0.298	0.296	0.322	0.298	0.309	0.313	0.297	0.308
F	0.319	0.293	0.291	0.294	0.311	0.318	0.298	0.294
Average	**0.302**	**0.297**	**0.309**	**0.298**	**0.301**	**0.306**	**0.302**	**0.298**

Carbon Steel Tank

UL 142 manuf. min. thickness = 0.167"

A = 7' up from the bottom
B = 6' up from the bottom
C = 5' up from the bottom
D = 24" up from the bottom
E = 12" up from the bottom
F = 6" up from the bottom

Tank # 142 (OEPA ID # T242) Hazardous Waste - 1,1,1 - Trichloroethane (20K) - Shell Thickness Data Summary

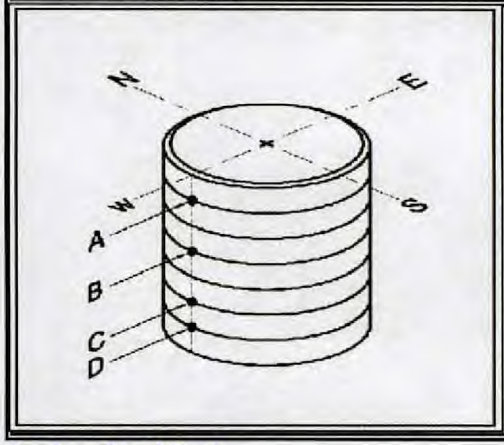

	NORTH	NORTH EAST	WEST	NORTH WEST	SOUTH	SOUTH WEST	EAST	SOUTH EAST
TOP	-	-	-	-	-	-	-	-
A	0.311	0.299	0.299	0.300	0.319	0.305	0.305	0.298
B	0.314	0.296	0.296	0.298	0.328	0.298	0.298	0.296
C	0.296	0.300	0.294	0.298	0.298	0.298	0.300	0.305
D	0.292	0.297	0.296	0.296	0.332	0.336	0.294	0.301
E	0.312	0.296	0.296	0.298	0.332	0.332	0.296	0.328
F	0.303	0.310	0.298	0.298	0.299	0.299	0.327	0.340
Average	0.305	0.300	0.297	0.298	0.318	0.311	0.303	0.311

Carbon Steel Tank

UL 142 manuf. min. thickness = 0.167"

A = 7' up from the bottom
B = 6' up from the bottom
C = 5' up from the bottom
D = 24" up from the bottom
E = 12" up from the bottom
F = 6" up from the bottom

Tank # 145 (OEPA ID # T245) Hazardous Waste - Recycled N-Methyl Pyrrolidone (20K) - Shell Thickness Data Summary

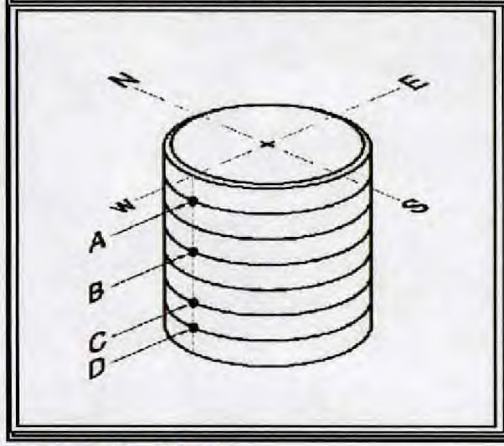

	NORTH	NORTH EAST	WEST	NORTH WEST	SOUTH	SOUTH WEST	EAST	SOUTH EAST
TOP	-	-	-	-	-	-	-	-
A	0.305	0.301	0.299	0.301	0.305	0.332	0.319	0.315
B	0.301	0.300	0.301	0.301	0.302	0.301	0.326	0.301
C	0.305	0.302	0.299	0.310	0.306	0.308	0.327	0.323
D	0.303	0.305	0.303	0.305	0.318	0.317	0.343	0.340
E	0.301	0.305	0.302	0.308	0.316	0.301	0.298	0.299
F	0.302	0.304	0.305	0.302	0.324	0.301	0.332	0.301
Average	0.303	0.303	0.302	0.305	0.312	0.310	0.324	0.313

Carbon Steel Tank

UL 142 manuf. min. thickness = 0.167"

A = 7' up from the bottom
B = 6' up from the bottom
C = 5' up from the bottom
D = 24" up from the bottom
E = 12" up from the bottom
F = 6" up from the bottom

Tank # 146 (OEPA ID # T246) Hazardous Waste - N-Methyl Pyrrolidone (20K) - Shell Thickness Data Summary

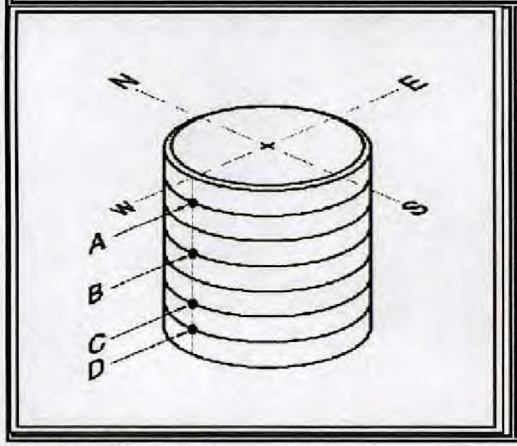

	NORTH	NORTH EAST	WEST	NORTH WEST	SOUTH	SOUTH WEST	EAST	SOUTH EAST
TOP	-	-	-	-	-	-	-	-
A	0.309	0.305	0.305	0.305	0.305	0.311	0.309	0.308
B	0.306	0.308	0.304	0.303	0.306	0.307	0.307	0.307
C	0.302	0.312	0.304	0.304	0.308	0.312	0.305	0.327
D	0.301	0.306	0.304	0.303	0.305	0.303	0.306	0.344
E	0.306	0.307	0.308	0.304	0.309	0.305	0.307	0.347
F	0.304	0.304	0.310	0.303	0.311	0.307	0.333	0.353
Average	0.305	0.307	0.306	0.304	0.307	0.308	0.311	0.331

Carbon Steel Tank

UL 142 manuf. min. thickness = 0.167"

A = 7' up from the bottom

C = 5' up from the bottom

D = 24" up from the bottom

E = 12" up from the bottom

F = 6" up from the bottom

Tank # 147 (OEPA ID # T247) Hazardous Waste - N-Methyl Pyrrolidone (20K) - Shell Thickness Data Summary

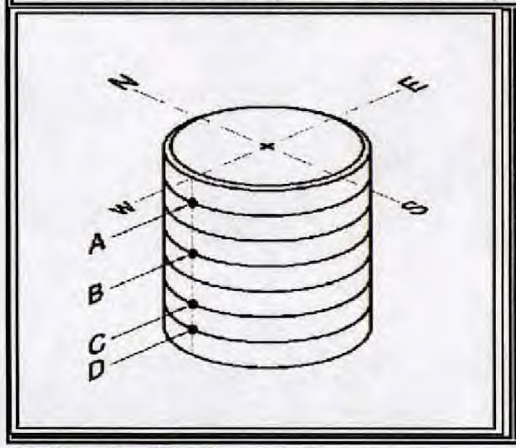

	NORTH	NORTH EAST	WEST	NORTH WEST	SOUTH	SOUTH WEST	EAST	SOUTH EAST
TOP	-	-	-	-	-	-	-	-
A	0.307	0.303	0.309	0.305	0.305	0.307	0.307	0.301
B	0.306	0.304	0.311	0.303	0.304	0.304	0.305	0.300
C	0.305	0.307	0.307	0.304	0.301	0.305	0.301	0.302
D	0.303	0.324	0.306	0.307	0.305	0.303	0.302	0.302
E	0.307	0.302	0.302	0.304	0.303	0.303	0.301	0.302
F	0.301	0.301	0.302	0.314	0.300	0.302	0.297	0.300
Average	0.305	0.307	0.306	0.306	0.303	0.304	0.302	0.301

Carbon Steel Tank

UL 142 manuf. min. thickness = 0.167"

A = 7' up from the bottom

B = 6' up from the bottom

C = 5' up from the bottom

D = 24" up from the bottom

E = 12" up from the bottom

F = 6" up from the bottom

APPENDIX B

PHOTOGRAPHS

80
MIXED CHLORINATED
HAZARDOUS WASTE
81
MIXED CHLORINATED
HAZARDOUS WASTE
82
MIXED CHL
HAZARD
WASTE

83
MIXED CHLO
84E
MIXED
VASTE
89
MIXED
94

2
0
45
LED N-METHYL PYRROLIDONE

1
0
85
MIXED CHLORINATEDS
HAZARDOUS
WASTE
CAUTION

1
0
87
-1-TRI-CHLOROETHANE
HAZARDOUS
WASTE
DANGER

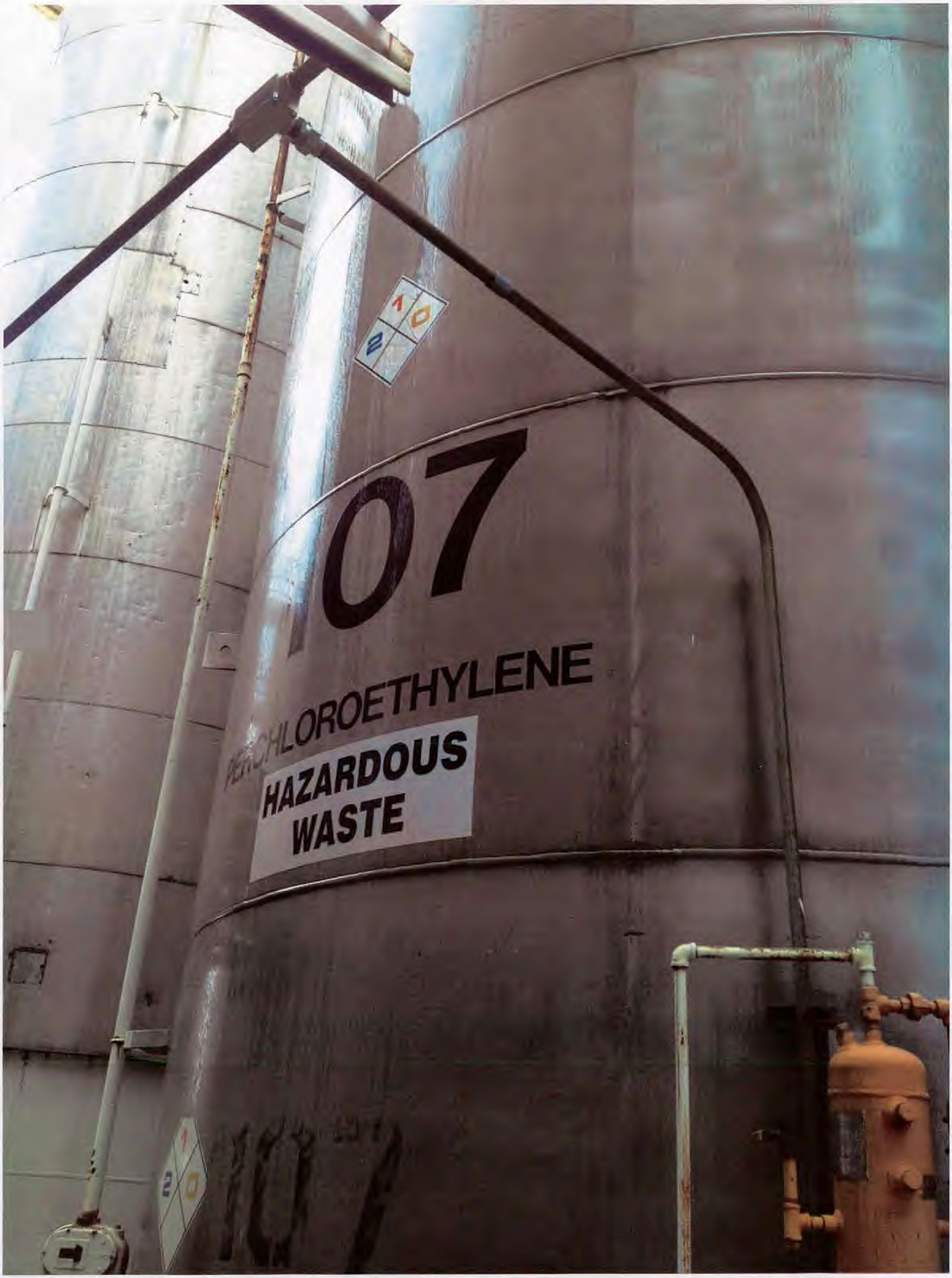
07
PERCHLOROETHYLENE
HAZARDOUS
WASTE

142
1,1,1,-TRICHLOROETHANE
DANGER
CONFINED SPACE
ENTER BY
PERMIT ONLY

146
N-METHYL PYRROLIDONE
DANGER
CONFINED SPACE

APPENDIX C

FACILITY SITE PLAN

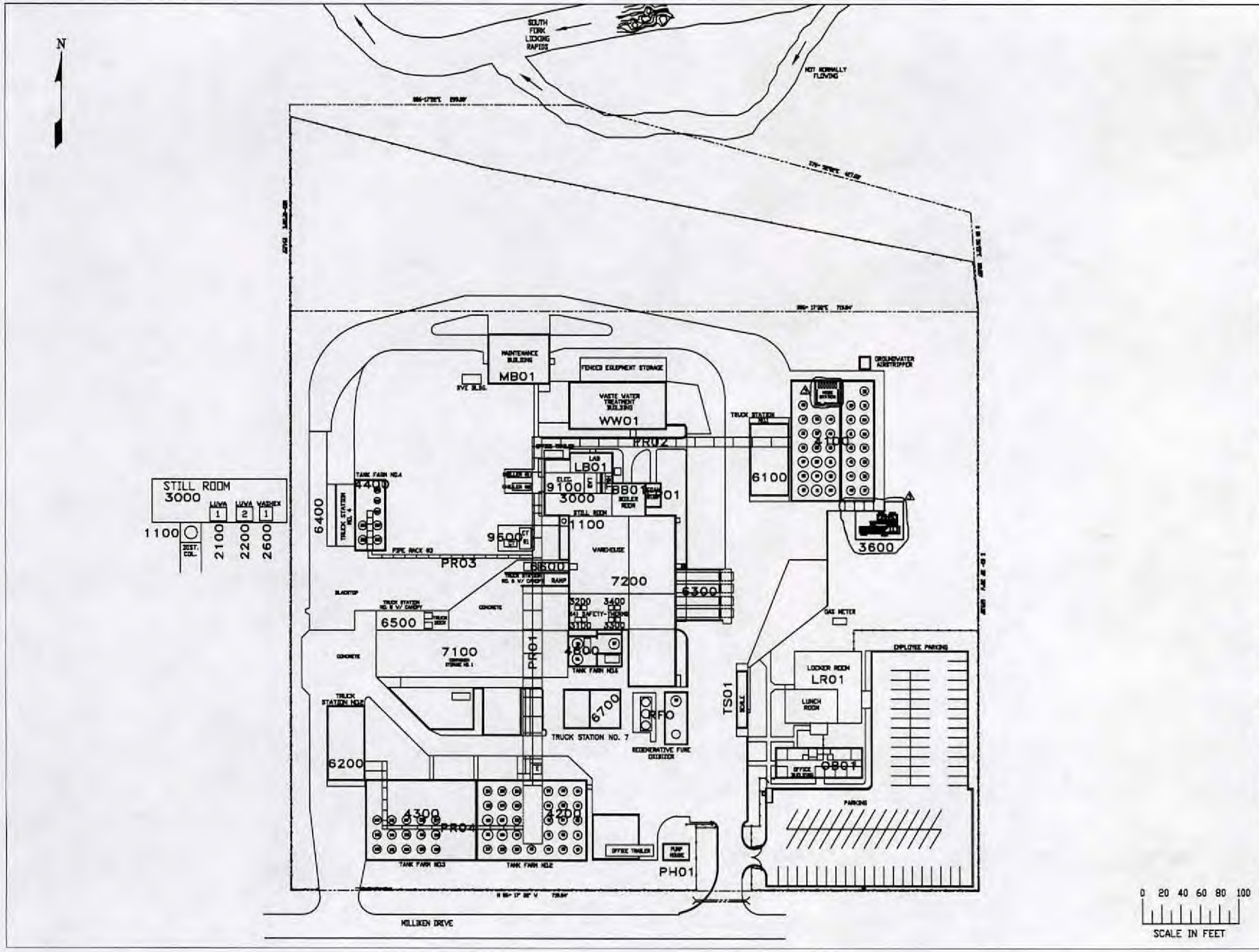

0 20 40 60 80 100

SCALE IN FEET

NOTES

PROCESS NUMBERING SYSTEM

1100	DISTILL COLUMN NO.1
2100	LUNA NO. 1
2200	LUNA NO. 2
2600	WASHEX NO. 1
2700	WASHEX NO. 2
3000	STILL ROOM
3100	SAFETY-THERM NO. 1
3200	SAFETY-THERM NO. 2
3300	SAFETY-THERM NO. 3
3400	SAFETY-THERM NO. 4
3600	DEHYDRATION UNIT
4100	TANK FARM NO. 1
4200	TANK FARM NO. 2
4300	TANK FARM NO. 3
4400	TANK FARM NO. 4
4800	TANK FARM NO. 6
6100	TRUCK STATION NO. 1
6200	TRUCK STATION NO. 2
6300	TRUCK STATION NO. 3
6400	TRUCK STATION NO. 4
6500	TRUCK STATION NO. 5
6600	TRUCK STATION NO. 6
7100	CONTAINER STORAGE AREA NO. 1
7200	CONTAINER STORAGE AREA NO. 2
9100	ELECTRICAL ROOM
9600	COOLING WATER

FACILITY SUPPORT UNIT/AREA LETTERING SYSTEM

BB01	BOILER BUILDING
FP01	FIRE PROTECTION BUILDING
LB01	LABORATORY BUILDING
LR01	LOCKER ROOM
MB01	MAINTENANCE BUILDING
OB01	OFFICE BUILDING
PH01	PUMP HOUSE
PR01	PIPERACK
PR02	PIPERACK
PR03	PIPERACK
PR04	PIPERACK
RFO	REGENERATIVE FUME OXIDIZER
TS01	TRUCK SCALE
WW01	WASTE WATER TREATMENT BUILDING

NO.	DESCRIPTION	CK.	PRELIMINARY APPR.	PROJECT APPR.	DATE
3	ADDED DEHYDRATION UNIT & TANK FARM 4100 HOSE STATION	KHC JVC	JVC		11/25/13
2	AS BUILT REVISION	GK			03/07/03
1	ADD RFO/ DELETE HYDRAP.	GK			06/05/98

REVISIONS

PROPRIETARY STATEMENT

THIS DRAWING IS THE EXCLUSIVE PROPERTY OF CLEAN HARBORS AND IS PROPRIETARY AND CONFIDENTIAL INFORMATION. THIS DRAWING AND THE INFORMATION CONTAINED THEREIN MUST NOT BE DUPLICATED, USED, DIVULGED, REPRODUCED, COPIED, DISCLOSED OR APPROPRIATED IN WHOLE OR IN PART FOR ANY PURPOSE OTHER THAN AS EXPRESSLY AUTHORIZED BY CLEAN HARBORS THIS DRAWING MUST BE RETURNED PROMPTLY UPON REQUEST.

FILENAME SITEPLANE.DWG

SITE PLAN

CleanHarbors

SCALE	DRAWN	CHECKED	APPR.	OPERATION APPR	DATE
1"=50'-0"	DARIN S.				6/21/94

RECYCLE CENTER LOCATION
HEBRON, OHIO

DRAWING NO. 624-SP01

REV 3

REPORT
HAZARDOUS WASTE TANK ASSESSMENT
SAFETY-KLEEN CORP. RECYCLE CENTER
HEBRON, OHIO

Prepared for:
Safety-Kleen Corp.
777 Big Timber Road
Elgin, Illinois 60123

Prepared By:

WANG ENGINEERING, INC.
1000 West Hawthorne Drive
Itasca, Illinois 60143
(312) 250-0707

TABLE OF CONTENTS

1.0 INTRODUCTION.....1

2.0 ASSESSMENT OF EXISTING TANK SYSTEMS.....6
2.1 Evaluation of Existing Tanks.....6
2.2 Evaluation of Secondary Containment Systems.....10

3.0 ASSESSMENT OF PROPOSED NEW TANK SYSTEMS.....11
3.1 Evaluation of New Tanks.....11
3.2 Evaluation of Secondary Containment Systems.....14

4.0 CONCLUSION.....20

Certification Statement.....22

Appendix 1 - Existing Tanks in Tank Farm No. 1

Appendix 2 - Existing Tanks in Tank Farm No. 2

Appendix 3 - Existing Tanks in Tank Farm No. 4

Appendix 4 - Existing Tanks in Tank Farm No. 6

Appendix 5 - New Tank No. 98 and Secondary Containment Structure for Tank Farm No. 6

REPORT
HAZARDOUS WASTE TANK ASSESSMENT
SAFETY-KLEEN CORP. RECYCLE CENTER
HEBRON, OH

1.0 INTRODUCTION

Wang Engineering, Inc. (WEI) is pleased to submit this assessment report for the new and existing hazardous waste storage tanks at the Hebron Recycle Center located at 581 Milliken Drive, Hebron, Ohio. This assessment was performed to fulfill the requirements of the Code of Federal Regulations 40 CFR 264.191 (Assessment of Existing Tank System's Integrity), 264.192 (Design and Installation of New Tank System and Components), and 264.193 (Containment and Detection of Releases).

The Hebron Recycle Center currently has four active, above-ground tank farms, which contain a total of forty-two (42) existing hazardous waste storage tanks ranging from 3 to 6 years old. In addition, Safety-Kleen recently constructed a new tank within one of the existing tank farms. Given the large number of waste tanks (existing and new) in this facility, WEI organizes this tank systems assessment report according to existing and new tanks, on a tank farm by tank farm basis as described below.

Existing tanks were assessed under 40 CFR 264.191 -- Assessment of Existing Tank System's Integrity. The four tank farms and forty-two (42) tanks falling under this category are:

1. Existing Tank Farm No. 1 including Tanks Nos. 30 through 37, 39 through 45, 63, and 67 (Total of 17 tanks).

2. Existing Tank Farm No. 2 including Tank Nos. 83a,b; 84a,b; 86 through 88; 89a,b; 91; 92a,b; 94a,b; and 102a,b (Total of 16 tanks).

3. Existing Tank Farm No. 4, including Tank Nos. 203 through 209 (Total of 7 tanks).

4. Existing Tank Farm No. 6, including Tank Nos. 96 and 97 (Total of 2 tanks).

The new tank was assessed under 264.192 -- Design and Installation of New Tank Systems and Components. The one tank farm and the new tank falling under this category are:

1. Existing Tank Farm No. 6, including Tank No. 98 (Total of 1 tank).

The locations of these tanks and tank farms are shown on Safety-Kleen Corp. Drawing No. 85-64201-001, Facility Site Plan Layout with Tank Schedule, 1-15-86, Rev. 6, 8-26-86, (being updated to reflect current tank configurations in Tank Farm Nos. 1, 4 and 6 as well as in the tank schedule). In the new tank category, Tank No. 98 was installed in Tank Farm No. 6 in February, 1989 for 90-day hazardous waste accumulation. The secondary containment system for the new tank was assessed under 264.193 -- Containment and Detection of Releases.

To facilitate the data collection and evaluation process, WEI designed four forms for data collection and evaluation. These forms are:

1. Tank Inspection/Design Form

2. Tank Evaluation Form

3. Secondary Containment Structure Inspection/Design Form

4. Secondary Containment Structure Evaluation Form

We want to emphasize, however, that the main purpose of the inspection/design forms is for data collection and compilation, as well as for documentation purpose. In an effort to be inclusive, these forms are somewhat generic in nature and under some specific circumstances, they may contain information not critical for tank assessment.

The assessment of these tanks included review of unsigned permit drawings, site inspection, and gathering, when available, other appropriate design information and data including tank thickness measurements, age of tanks, and soil investigation reports from Safety-Kleen Corp. Prior to the site visit, WEI personnel reviewed the appropriate permit drawings and transferred pertinent information from the drawings to the inspection forms. A site visit was conducted on March 15 and 16, 1988. During the visit, WEI personnel met with the Plant Engineer to obtain general information about the plant, as well as safety rules and other information that we should be aware of during the visit. Then WEI inspected each tank and tank farm individually, and recorded information onto the inspection forms. Pertinent information previously recorded from reviewing the permit drawings was field verified. After the visit, the Tank Evaluation and Secondary Containment Evaluation Forms were prepared based on the information contained in the inspection

forms; each of the inspection and evaluation forms for the existing tanks are attached as Appendices 1 through 5 of this report, on a tank farm by tank farm basis.

The drawings and documents supplied by Safety Kleen Corp and reviewed by WEI for the tank systems assessment are listed as follows:

- o Safety-Kleen Corp. Drawing No. 85-64201-001, 1-15-86, Revision 6 8-26-86, Facility Site Plan Layout-with Tank Schedule. (to be updated)
- o Existing Tank Farm No. 1
  - Safety-Kleen Drawing No. 88-64200-151, 1-2-85, Rev. 0, 12-4-88, 15,000 Gal. Steel Lined Tanks For Tank 32, 33, 34, 35, 36, 37, 39, 40, 41, 42, 43, 44, 45, 63.
  - Safety-Kleen Drawing No. 88-64200-154, 11-12-82, Rev. 0, 12-4-88, 30,000 Gal. Steel and Stainless Steel Tanks (Steel Tank No. 67).
  - Safety Kleen Drawing No. 88-64200-157, 4-6-84, Rev. 2 6-15-84, 10,500 Gal. Vertical Storage Tanks, Tank No. 208 (Essentially identical to SK Drawing D10441, 4-6-84, which is applicable to 30 and 31, per SK staff).
  - Safety-Kleen Drawing No. 85-64200-509, 1-30-86, Rev. 0, 1-31-86, Tank Farm No. 1 Concrete Sections and Detail from Drawing 509.
  - Safety Kleen Drawing No. 85-64201-504, 1-14-86, Rev. 0, 1-14-86, Concrete Construction Layout Tank Farm No. 1-West Portion.
  - Safety-Kleen Drawing No. 85-64201-505, 12-11-85, Rev. 3, 4-7-86, Concrete Construction Details.
- o Existing Tank Farm No. 2
  - Safety-Kleen Drawing No. 85-64200-151, 1-2-85, Rev. 0, 12-14-88, 15,000 Gal. Steel lined Tanks for Tank Nos. 86, 87, 88, 91.
  - Safety-Kleen Drawing No. 88-64200-153, 1-10-86, Rev.

0, 12-4-88, 15,000 Gal. Steel Piggy-BAck Tanks for Tanks Nos. 83, 84, 89, 92, 94.

- Safety-Kleen Drawing No. 85-64201-502, 3-20-86, Rev. 3, 4-30-86, Concrete Construction Layout- Tank Farm No. 2.

- Safety-Kleen Drawing No. 85-64201-506, 3-25-86, Rev. 5, 8-22-86, Snake Pit Area, Concrete Construction Layout from Tank Farm No. 2, Drawing 502.

- Safety-Kleen Drawing No. 85-64201-519, 4-7-86, Rev. 2, 7-17-86, Underdrain locations, Tank Farms Nos. 2 & 3.

- Safety-Kleen Drawing No. 85-64201-521, 6-20-86, Rev. 2, 7-21-86, Concrete Sections and Details for Slabs and Ramp into Tank Farm No. 2.

o Existing Tank Farm No. 4

- Safety-Kleen Drawing No. 88-64200-156, 6-16-82, 8,000 Gal. Vert. Tank-Tank Nos. 206 and 207.

- Safety-Kleen Drawing No. 88-64200-157, 4-6-84, Rev. 2, 6-15-84, 10,500 Gal. Vert. Storage Tank- Tank No. 208.

- Safety-Kleen Drawing No. E11728, 1-30-85, Conc. Construction Plan for D. C. Tankfarm.

- Safety Kleen Drawing No. E11731, 1-30-85, Rev. 1, 5-21-85, Conc. Construction Details.

o Existing Tank Farm No. 6

- Safety-Kleen Drawing No. E11730, 1-30-85, Rev. 2, 3-21-85, Conc. Construction Plan for D. C. Material Handling Area.

- Safety-Kleen Drawing No. D10855, 1-7-83, Rev. 1, 5-12-83, Construction Details for Concrete Dike and Pad Project.

- Safety-Kleen Drawing No. E11731, 1-30-85, Rev. 1, 5-21-85, Conc. Construction Details.

o Subsurface Investigation Report by CTL Engineering, Inc. Columbus, OH, dated 9-30-86.

o Report of Ultrasonic Thickness Testing of Storage Tanks at Hebron Recycle Center, by Maintenance Analysis

Systems, Newark, OH, 1-23-89.

It should be noted that tank design drawings for Tank Nos. 96 and 97 are not available. The design drawing for the new tank (Tank No. 98) is not currently available.

The results of our review and inspection, as summarized on the tank and secondary containment structure inspection and evaluation forms are attached as appendices to this report according to existing and new tanks, on a tank farm by tank farm basis. The following presents the summary of the tank system's integrity assessment.

2.0 ASSESSMENT OF EXISTING TANK SYSTEMS

2.1 EVALUATION OF EXISTING TANKS

Existing hazardous waste storage tanks in the Hebron Recycle Center include seventeen (17) tanks in Tank Farm No. 1, sixteen (16) tanks in Tank Farm No. 2, seven (7) tanks in Tank Farm No. 4, and two (2) tanks in Tank Farm No. 6 for a total of forty-two (42) tanks. Tank Farm No. 1 includes Tanks Nos. 30 through 37, 39 through 45, 63, and 67. Tank Farm No. 2 includes Tank Nos. 83a,b; 84a,b; 86 through 88; 89a,b; 91; 92a,b; 94a,b; and 102a,b. Tank Farm No. 4 includes Tank Nos. 203 through 209. Tank Farm No. 6 includes Tank Nos. 96 and 97. The integrity of these tanks was evaluated based on the information compiled in the Tank Inspection and Evaluation Forms (attached in Appendices 1 through 4 of this report, on a tank farm by tank farm basis), and according to the criteria stipulated in 40 CFR 264.191 --

Assessment of Existing Tank System's Integrity.

40 CFR 264.191 (b)(1) -- Design Standards if available according to which the tanks and ancillary equipment were constructed.

- Based upon our review of the design drawings available for all the existing tanks, except Tank Nos. 96 and 97. The tanks were constructed in accordance with UL Standard 142 for above ground atmospheric tanks for flammable liquids. No drawings are available for Tank Nos. 96 and 97. However, based on our discussions with Safety-Kleen staff, these two tanks should also have been designed according to UL-142. Nevertheless, the structural strength of all the tanks was checked by using parameters related to the minimum field-measured tank thickness, with full-load of contents and 100 mile-per-hour wind conditions. The maximum stress on the tank is calculated at the bottom of the tank. The formula used for this calculation is shown in the Tank Evaluation Forms. The calculated stress for the referenced tanks was found to be well within the allowable stress for carbon steel, as shown in the Tank Evaluation Forms provided in the Appendices.

40 CFR 264.191 (b)(2) -- Hazardous characteristics of the waste(s) that have been and will be handled.

- The Safety-Kleen reported potential contents for the

tanks are chlorinated solvents, mineral spirits, cresylic acid, and sludge or bottoms oils related to these solvents. According to the design drawings, the existing waste tanks are all made of carbon steel. These solvents are either flammable or toxic and are compatible with one another. EPA Technical Resource Document for the Storage and Treatment of Hazardous Waste in Tank Systems (December, 1986), mild steel is not compatible with perchloroethylene. However, based on Safety-Kleen's 20 years of operational experience with the perchloroethylene and other halogenated and non-halogenated solvents and tanks as well as piping constructed of carbon steel, these materials are compatible. In addition, the results of thickness measurements of carbon steel tanks at Safety-Kleen's recycle centers in Illinois and New Jersey show that after 12 years of continuous usage, shell thinning occurred only in very few tanks. The maximum corrosion rate determined from performance measurements was found to be less than 0.003 inches per year.

- Based on actual thickness measurements of all waste storage tanks at this facility, the maximum corrosion rate, based on the minimum value of measurements made on Tank No. 43, was calculated at 0.022 inch per year. The corrosion rate of all other tanks calculated were

generally similar to those experienced elsewhere at other Safety-Kleen facilities. We recommend that the shell thickness of Tank No. 43 be re-measured or the tank be internally inspected to confirm that the relatively rapid corrosion rate; there is, however, in our opinion, no immediate major concern for the integrity of this tank.

40 CFR 264.191 (b)(3) -- Existing corrosion protection measure.

- The tanks examined in the tank farms are painted. The tanks are above ground and do not have any metallic components in direct contact with soil.

40 CFR 264.191 (b)(4) -- Documented age of the tank system, if available (otherwise an estimate of the age).

- According to the Safety-Kleen record, the age of the tanks ranges from 3 to 6 years. The estimated construction date for each individual tank is recorded in the Tank Inspection Forms.

40 CFR 264.191 (b)(5) -- Results of leak test, internal inspection or other tank integrity examination.

- External tank integrity examinations were performed on the referenced waste tanks in the tank farms. There were some minor imperfections on a few of the tanks. However, the observed imperfections involve minor paint peeling and rust spots in areas near the bottom lip of skirted

tanks or near the base of flat bottom tanks. In our opinion, the imperfections found on the tanks are related to minor maintenance items and should not compromise the integrity of the tanks.

- Tank No. 45 has a slight concaved top which may be due to improper function of the vent or due to concussion during construction. Tank No. 83 has a few minor dents on the surface of the shaft and on the cone. These flaws should be examined and observed closely by plant staff. They do not, however, in our opinion, represent an immediate concern regarding the integrity of these two tanks.

2.2 EVALUATION OF SECONDARY CONTAINMENT SYSTEMS

Based on the information gathered above, it is our opinion that the referenced existing hazardous waste storage tanks at the Hebron, OH Recycle Center were rated as fit for use. According to 40 CFR 264.193 (a), "secondary containment that meets the requirements of 40 CFR 264.193 must be provided for those existing tank systems of known and documented age, within two years after January 12, 1987 or when the tank system has reached 15 years of age, whichever comes later." Since the examined tanks in this recycle center were constructed prior to January 12, 1987, and were less than 15 years old, secondary containment systems are not required as the tanks are deemed fit for use.

Nevertheless, secondary containment systems have been provided for all the existing tanks. Based on our site

inspection, the containment systems for all the tank farms appear to be in good condition. For Tank Farm No. 6, the secondary containment structure will be further evaluated in Section 3.2 of this report, because of the presence of a "new" tank (Tank No. 98) in the tank farm.

3.0 ASSESSMENT OF PROPOSED NEW TANK SYSTEMS

3.1 EVALUATION OF NEW TANKS

"New" hazardous waste tanks at the Hebron Recycle Center include Tank No. 98 in the existing Tank Farm No. 6. This tank was installed in February, 1989 for 90-day accumulation of hazardous waste.

As this tank became a waste handling tank after January 12, 1987, it is evaluated as a new tank and required to have a secondary containment system. The integrity of this tank was evaluated based on the information compiled in the Tank Inspection and Evaluation Forms (attached as Appendix 5), and according to the criteria stipulated in 40 CFR 264.192, Design and Installation of New Tank Systems and Components.

40 CFR 264.192(a)(1) -- Design Standard(s) according to which the tank(s) and/or the ancillary equipment were constructed.

- Design drawings for Tank No. 98 was not available. However, based on our discussions with Safety-Kleen staff, we understand that the tank was designed according

to UL Standard 142 for aboveground atmospheric tanks for flammable liquids. In addition we have checked the structural strength of the tank by assuming compliance with construction specifications and using parameters related to the measured minimum tank thickness and under full load of contents and 100 miles per hour wind conditions. The maximum stress on the tank (i.e. at the bottom weld) is calculated. The formula used for this calculation is shown in the Tank Evaluation Forms. The calculated stress for the tank was found to be significantly lower than the allowable stress for the steel, as shown in the Tank Evaluation Forms provided in the Appendix 5.

- It is our understanding that the ancillary equipment are constructed according to applicable standards and Safety-Kleen's normal practice, which has had over 15 years of success for similar installations without a major design failure.

40 CFR 264.192(1)(2) -- Hazardous characteristics of the waste(s) to be handled.

- The types of waste potentially to be handled by Tank No. 98 Safety-Kleen are waste mineral spirits, various organic solvents, (including halogenated and non-

halogenated), and immersion cleaner. The latter contains methylene chloride, ortho-dichlorobenzene, and cresylic acid. These solvents are either ignitable or toxic. Based on data presented earlier in Section 2.1 of this report, these solvents and Tank No. 98, which is constructed of carbon steel, are compatible.

40 CFR 264.192(a)(3) -- For new tank systems or components in which the external shell of a metal tank or any external metal component of the tank system will be in contact with the soil or with water, determination by a corrosion expert will be required.

- Safety-Kleen's standards of practice and construction specifications require all tanks be painted. The tanks are aboveground tanks and do not have any metallic components in direct contact with soil.

40 CFR 264.192(a)(4) -- For underground tank system component that are likely to be adversely affected by vehicular traffic, a determination of design or operational measures that will protect the tank system against potential damage.

- There are no underground tanks used for the hazardous waste management, and thus, this provision does not apply.

40 CFR 264.192(a)(5) -- Design considerations to ensure that a) Tank foundation will maintain the load of a full tank; B) Tank system will be anchored to prevent flotation or dislodgment where the tank system is placed in a saturated zone, or located within a seismic fault zone subject to standards of 264.18(a); and C) Tank system will withstand the effects of frost heave.

- The design drawings indicate that the flat bottom tank is designed to be supported on a reinforced concrete base. The concrete base is part of the secondary containment system. According to our understanding that the secondary containment structure is designed by licensed Professional Engineers. The tanks are aboveground and will not be subjected to flotation, dislodgment, or frost heave. The Safety-Kleen Hebron Recycle Center site is not known to be located within a seismic fault zone.

40 CFR 264.192(b) through (g) -- These are items related to construction, documentation, operation/maintenance, and record keeping; they are on file at Safety-Kleen.

3.2 EVALUATION OF SECONDARY CONTAINMENT SYSTEMS

Tank No. 98 is located within an existing secondary containment system (Tank Farm No. 6). WEI has evaluated the secondary containment systems according to the stipulation of 40 CFR 264.193 and based on information shown in the Inspection/Design and Evaluation Forms, as attached in Appendix 5 of this report.

40 CFR 264.193(b) -- Secondary containment systems must be: (1) Designed, installed and operated to prevent any migration of wastes or accumulated liquid out of the system to the soil, groundwater or surface water at any time during the use of the tank system; and (2) Capable of detecting and collecting releases and accumulated liquids until the collected material is removed.

- The reinforced concrete dikes and bases are designed to contain liquid which may accumulate in the dike area due to a tank leakage or spill. The minor hairline cracks noted in Tank Farm No. 6 are considered insignificant. It would be prudent, however, to provide additional maintenance of the hairline and small cracks on the dikes and base of the containment structures of Tank Farm No. 6, to assure the tightness of the containment systems.
- Daily visual inspection will allow the rapid collection of releases from sumps located within the contained area.

40 CFR 264.193(c)(1) -- To meet the requirements of subsection (b), secondary containment systems must be at a minimum: (1) Constructed of or lined with materials that are compatible with the waste(s) to be placed in the tank system and must have sufficient strength and thickness to prevent failure owing to pressure gradients (including static head and external hydrological forces), physical contact with the waste to which it is exposed, climatic conditions and the stress of daily operation (including stresses from nearby vehicular traffic);

- It is our understanding that the secondary containment system for Tank Farm No. 6 was designed by a licensed professional engineer who has taken into consideration pressure gradients, climatic conditions, and operational stresses from within and outside the containment area.

40 CFR 264.193(c)(2) -- To meet the requirements of subsection (b), secondary containment systems must be at a minimum: (2) Placed on a foundation or base capable of providing support to the secondary containment system, resistance to

pressure gradients above and below the system, and capable of preventing failure due to settlement, compression or uplift:

- The secondary containment system for Tank Farm No. 6 has been in use for several years with satisfactory performance. In addition, based on our knowledge of subsurface conditions of the recycle center facility and a soils report prepared by CTL Engineering, Inc. of Columbus, OH on September 30, 1986 for Tank Farm No. 1 area, we are of the opinion that the soil conditions at the Tank Farm No. 6 area are capable of providing adequate foundation support for the structure.

40 CFR 264.193(c)(3) -- To meet the requirements of subsection (b), secondary containment systems must be at a minimum: (3) Provided with a leak-detection system that is designed and operated so that it will detect the failure of either the primary or secondary containment structure or the presence of any release of hazardous waste or accumulated liquid in the secondary containment system within 24 hours,

- No leak detection systems are provided for the secondary Containment systems. Leaks from the tanks can be detected within 24 hours through daily inspection.

40 CFR 264.193(c)(4) -- To meet the requirements of subsection (b), secondary containment systems must be at a minimum: (4) Sloped or otherwise designed or operated to drain and remove liquids resulting from leaks, spills or precipitation. Spilled or leaked waste and accumulated precipitation must be removed from the secondary containment system within 24 hours.

- The base of the secondary containment system is sloped in a manner that spilled materials and/or precipitation will flow into a sump, from which the liquid can be removed

within 24 hours.

40 CFR 264.193(d) -- Secondary containment for tanks must include one or more of the following devices: 1. A liner (external to the tank); 2. A vault; 3. A double-walled tank; or 4. An equivalent device as approved by the Board in an adjusted standards proceeding.

- The tank farm has secondary containment systems constructed of reinforced concrete base and dikes. This containment system is classified as a vault. Safety-Kleen will apply a chemical resistant coating (Semstone 145, manufactured by Sentry Polymers) on all the concrete surfaces of the structure.

40 CFR 264.193(e) -- Part 2 of this section includes specific design requirements pertaining to vault systems: (2) Vault systems must be: (i) Designed or operated to contain 100 percent of the capacity of the largest tank within the vault system's boundary;

- Based on data taken from the field measurement, the secondary containment system has excess capacity to hold 100 percent of the volume of the largest tank within its boundary.

40 CFR 264.193(e) -- Part 2 of this section includes specific design requirements pertaining to vault systems: (2) Vault systems must be: (ii) Designed or operated to prevent run on or infiltration of precipitation into the secondary containment system unless the collection system has sufficient excess capacity to contain run-on or infiltration. Such additional capacity must be sufficient to contain precipitation from a 25-year, 24-hour rainfall event;

- The containment system is designed to prevent run-on or

infiltration. The dike system is designed to hold 100 percent of the volume of the largest tank as well as the amount of precipitation during a 25-year, 24-hour event, which according to the National Weather Bureau Rainfall Frequency Atlas of the U.S., is estimated at 4.25 inches for the Hebron, OH area.

40 CFR 264.193(e) -- Part 2 of this section includes specific design requirements pertaining to vault systems: (2) Vault systems must be: (iii) Constructed with chemical resistant water stops in place at all joints.

- It is our understanding that all existing hairline or small cracks as well as joints in the secondary containment systems will be sealed with a chemical resistant water stops.

I40 CFR 264.193(e) -- Part 2 of this section includes specific design requirements pertaining to vault systems: (2) Vault systems must be: (iv) Provided with an impermeable interior coating or lining that is compatible with the stored waste and that will prevent migration of waste into the concrete:

- Semstone 145 chemical resistant coating, manufactured by Sentry Polymers, will be applied to the concrete surfaces of the secondary containment system.

40 CFR 264.193(e) -- Part 2 of this section includes specific design requirements pertaining to vault systems: (2) Vault systems must be: (v) Provided with a means to protect against the formation of and ignition of vapors within the vault, if the waste being stored is considered as ignitable.

- The secondary containment system as designed is not

enclosed. There will be no accumulation of vapor from any potential liquid spills.

40 CFR 264.193(e) -- Part 2 of this section includes specific design requirements pertaining to vault systems. 2. Vault systems must be: (vi) Provided with an exterior moisture barrier or be otherwise designed or operated to prevent migration of moisture into the vault if the vault is subject to hydraulic pressure.

- Although the secondary containment system is not expected to be subjected to hydraulic pressure, as groundwater levels at the tank farm location are at least 10 feet below the base of the containment systems.

40 CFR 264.193(f) --Ancillary equipment must be provided with secondary containment (e.g., trench, jacketing, double-walled piping) that meets the requirements of subsections (b) and (c), except for: 1) Aboveground piping (exclusive of flanges, joints, valves and other connections) that are visually inspected for leaks on a daily basis; 2) Welded flanges, welded joints and welded connections, that are visually inspected for leaks on a daily basis;

- Based on the Safety-Kleen standard of practice and our inspection, that there are no underground pipes in the tank farm. Valves, pumps, flanges and connections within the secondary containment structure can be inspected for leaks on a daily basis. Pipe joints and connections outside of the containment areas are constructed as welded connections, and can be inspected on a daily basis for leaks.

Based on the results of the tank systems assessment, WEI concluded the following:

- Based on the review of permit issue and other available design drawings and on-site inspection, it is our opinion that all the existing tanks referenced in section 2.0 of this report are in good condition and fit for use. However, Tank No. 43 had one abnormally low shell thickness measurement; the tank thickness should be re-checked or internally inspected to assure no rapid corrosion of the tank. Tank No. 45 has a slightly concave roof; it should be further evaluated regarding the operational conditions of the vent as well as the structural soundness of the roof. Finally, Tank No. 83 has several small dents on the shell and the cone; the tank should be further examined for structural soundness and be observed more closely for performance. All these three tanks, in our opinion, present no cause for immediate concerns.
- Safety-Kleen records indicate that none of the existing tanks as referenced in Section 2.0 exceed 6 years of age and that the tanks are fit for use, secondary containment systems that meet the requirements of 40 CFR 264.193 are, therefore, not required. However, secondary containment systems for these existing tanks have been provided; one of the containment systems was further evaluated in

conjunction with the new tank assessment, as summarized below.

- For the new tank system (Tank No. 98), the tank is deemed fit to use.
- For the secondary containment system (Tank Farm No. 6) provided for the Tank No. 98, it is regarded as fit to use. However,
  1. Chemical resistant sealant should be applied to all hairline and small cracks as well as joints in the concrete dikes and base;
  2. A chemical resistant coating should be applied to all concrete surfaces; and
  3. Structural adequacy of the secondary containment structure for Tank Farm No. 6 should be confirmed by a licensed professional engineer.

Respectfully submitted,

WANG ENGINEERING, INC.

Jerry W. H. Wang, Ph.D., P.E.

JWHW/ lw

CERTIFICATION STATEMENT

I, Jerry W. H. Wang, have performed and supervised the assessment of the existing and new above-ground tank system located at 581 Milliken Drive, Hebron, Ohio which is owned and operated by Safety-Kleen Corporation. My duty was an evaluation of the tanks and their concrete secondary containment structure, as required by Environmental Protection Agency Regulations 40 CFR 264.191, 264.192, and 264.193.

I certify under penalty of law that this document and all attachments were prepared by me or under my direction or supervision in accordance with a system designed to assure that qualified personnel properly gather and evaluate the information submitted. Based on my inquiry of the person or persons who manage the system, or those persons directly responsible for gathering the information, the information is to the best of my knowledge and belief, true, accurate, and complete. I am aware that there are significant penalties for submitting false information, including the possibility of fine and imprisonment for knowing violations.

Jerry W. H. Wang, P.E.
Ohio Registered Professional Engineer
Registration No.: 38008

APPENDIX 1

Existing Tank Nos.

30 and 31

32 through 37,

39 through 45,

63 and 67

in

Tank Farm No. 1

TANK EVALUATION FORM

TANK NO./FARM: 30 and 31/1 DATE: 4/5/89 BY: JW

IS THIS AN EXISTING [X] OR A NEW TANK [ ]

SUFFICIENT STRUCTURAL STRENGTH:

BY MANUFACTURER DATA OR DESIGN STANDARDS: UL-142 and NACE RP-01-78

BY CALCULATION:

1. Stress at the bottom head joints for tanks

$$S = \frac{a\,M}{\pi R^2 T} + \frac{W}{\pi D T}$$

a - Conversion factor (12 in./foot)

M - wind moment at bottom weld joint, in pound-feet.

W - weight of full tank in pounds ~~(steel wt. and content)~~ Sp.gr. of Content =1.3

D - tank diameter in inches

R - tank radius in inches

T - tank thickness in inches (Min. measured on at similar tanks

Allowable stress: 14662 psi for SS
10795 psi for CS

$$M = b\,D H^2$$

b - 16.5 psi, for a wind velocity of 100 mph

D - tank diameter in feet

H - tank height in ft (excl. skirt)

If the calculated stress is less than or equal to the allowable stress, the tank thickness is satisfactory

S - 2494 psi

2. If the ratio of the tank height to tank diameter is more than 1.5, the tank support should be anchored.

CONCLUSION: Stress < Allowable Stress [X] Stress > Allowable Stress [ ]

COMPATIBILITY WITH THE WASTE: Yes [X] No [ ]

CORROSION RATE: -0.0012 Inches Per Year

CORROSION PROTECTION MEASURE: Adequate [X] Not Adequate [ ]

STRUCTURAL SUPPORT: Adequate [X] Not Adequate [ ]

FOUNDATION SUPPORT: Adequate [X] Not Adequate [ ]

CONDITIONS OF SEAMS OR WELDS: Good [X] Defective [ ] If defective, describe:

CONNECTIONS: In Good Condition [X] Not in Good Condition [ ]

PRESSURE CONTROL: In Good Condition [X] Not in Good Condition [ ]

ANY PUNCTURES OR DENTS: Yes [ ] No [X]

SCRAPES ON TANK OR ON PROTECTIVE COATINGS: Yes [ ] No [X]

CRACKS Yes [ ] No [X]

CORROSION Yes [ ] No [X]

OTHER STRUCTURAL DAMAGES Yes [ ] No [X]

CONCLUSIONS - IS THIS TANK FIT FOR USE: Yes [X] No [ ] If no, explain:

SIGNED J.W. Wang

Wang Engineering

TANK INSPECTION/DESIGN FORM

FACILITY NAME AND LOCATION Hebron OH R.C. (SK) DATE 3/16/89 BY fw
TANK NO./FARM 31/1 TANK HT/LENGTH: 28' DIA: 8'0"
TYPE OF TANK: Vertical [X] Horizontal [ ] A/G [X] U/G [ ]
CAPACITY: 10,000 gal. MATERIAL STORED/CHARACTERISTICS: Mineral Spirits / Ignit. Chlorinated Solvents / To

TOP HEAD: Dished [X] Cone [ ] Flat [ ] Open Top [ ]
BTM HEAD: Dished [ ] Cone [ ] Flat [X]
TYPE OF SUPPORT: Skirt [ ] Legs [ ] Saddles [ ] Slab [X]

SKIRT HT. _____ SKIRT THK: _____ SHAPE/SIZE/HT OF LEG SUPPORT: _____

TYPE AND CONDITIONS OF FOUNDATION SUPPORT: Reinforced Concrete Slab w/ minor hair line cracks

MATERIAL OF TANK CONSTRUCTION: Stainless Steel T-304 [ ] Carbon Steel [X]
TANK THICKNESS (DWG) SHELL: 1/4" ROOF PLATE: 1/4" BTM PLATE: 1/4"
(FIELD MEAS.): SHELL: 0.250 (Min.) ROOF PLATE: 0.253" BTM PLATE: _____

YEAR BUILT OR ESTIMATED AGE: 1984 MANUFACTURER'S NAME: _____
DESIGN STANDARDS: UL-142 and NACE RP-01-78
IS THIS CLASSIFIED AS A NEW TANK? Yes [ ] No [X]

INFORMATION OF NAME PLATE ATTACHED TO THE TANK: Chicago Boiler Co
LEVEL INDICATOR: Yes [X] No [ ] HIGH LEVEL ALARM: Yes [X] No [ ]
TANK CONNECTIONS: Flanged [X] Screwed [ ]

TANK VENT SIZE: Open Vent _____ Closed Vent 3" Normal Emergency Vent 24" M/H Cov
IS THE TANK INSULATED: Yes [ ] No [X] TANK PAINTED: Yes [X] No [ ]
PIPING: FROM THE TANK TO PROCESS UNIT: A/G X U/G _____
TYPE OF CONNECTIONS: Flanged [ ] Welded [X] Screwed [ ]

CONDITIONS OF CONNECTIONS, SEAMS, WELDS: Good
CAN THE PIPING, CONNECTION & SEAMS BE VISUALLY INSPECTED DAILY: Yes [X] No [ ]
ARE THERE ANY VISIBLE DENTS, SCRAPES, CORROSIONS ON TANK: Yes [ ] No [X]
IF YES, STATE EXACT LOCATION _____

DOES THE TANK HAVE ANY CONTAINMENTS TO CATCH LEAKS OR SPILLAGE: Yes [X] No [ ]
DISTANCE TO NEAREST TANK/NO 81"/39 CONTAINMENT WALL (Approx.) 59'
PROPERTY LINE (Approx.) >50'
LEAK TEST RESULTS None CORROSION PROTECTION MEASURES Painting

DOES THE TANK APPEAR TO BE STRUCTURALLY SOUND & IN GOOD CONDITION: Yes [X] No [ ]
REFERENCE DRAWING NO./Date: SK Dwg No. 88-64200-157, 4-6-84, Rev. 6-15-87
CONCLUSIONS - IS THIS TANK FIT FOR USE: Yes [X] No [ ]

REMARKS: Old Tank No. 153

Wang Engineering

TANK INSPECTION/DESIGN FORM

FACILITY NAME AND LOCATION Hebron OH R.C. (SK) DATE 3/16/89 BY tw
TANK NO./FARM 30/1 TANK HT/LENGTH: 28' DIA: 8'0"
TYPE OF TANK: Vertical [X] Horizontal [ ] A/G [X] U/G [ ]
CAPACITY: 10,000 gal. MATERIAL STORED/CHARACTERISTICS: Mineral Spirits / Ignit
Chlorinated Solvents / T

TOP HEAD: Dished [X] Cone [ ] Flat [ ] Open Top [ ]
BTM HEAD: Dished [ ] Cone [ ] Flat [X]
TYPE OF SUPPORT: Skirt [ ] Legs [ ] Saddles [ ] Slab [X]

SKIRT HT._____ SKIRT THK:_____ SHAPE/SIZE/HT OF LEG SUPPORT:_____

TYPE AND CONDITIONS OF FOUNDATION SUPPORT: Reinforced Concrete Slab w/ plind
hairline cracks

MATERIAL OF TANK CONSTRUCTION: Stainless Steel T-304 [ ] Carbon Steel [X]
TANK THICKNESS (DWG) SHELL: 1/4" ROOF PLATE: 1/4" BTM PLATE: 1/4"
(FIELD MEAS.): SHELL: 0.244" (Min.) ROOF PLATE: 0.231" BTM PLATE:_____

YEAR BUILT OR ESTIMATED AGE: 1984 MANUFACTURER'S NAME:_____
DESIGN STANDARDS: UL-142 and NACE RP-01-78
IS THIS CLASSIFIED AS A NEW TANK? Yes [ ] No [X]

INFORMATION OF NAME PLATE ATTACHED TO THE TANK: None
LEVEL INDICATOR: Yes [X] No [ ] HIGH LEVEL ALARMS: Yes [X] No [ ]
TANK CONNECTIONS: Flanged [X] Screwed [ ]

TANK VENT SIZE: Open Vent ____ Closed Vent 3" Mission Emergency Vent 24" M/H Co.
IS THE TANK INSULATED: Yes [X] No [ ] TANK PAINTED: Yes [ ] No [ ]
PIPING: FROM THE TANK TO PROCESS UNIT: A/G X U/G_____
TYPE OF CONNECTIONS: Flanged [ ] Welded [X] Screwed [ ]

CONDITIONS OF CONNECTIONS, SEAMS, WELDS: Good on piping, not observable on t
CAN THE PIPING, CONNECTION & SEAMS BE VISUALLY INSPECTED DAILY: Yes [X] No [ ]
ARE THERE ANY VISIBLE DENTS, SCRAPES, CORROSIONS ON TANK: Yes [ ] No [X]
IF YES, STATE EXACT LOCATION_____

DOES THE TANK HAVE ANY CONTAINMENTS TO CATCH LEAKS OR SPILLAGE: Yes [X] No [ ]
DISTANCE TO NEAREST TANK/NO 88"/31 CONTAINMENT WALL (Approx.) 49"
PROPERTY LINE (Approx.) >50'
LEAK TEST RESULTS None CORROSION PROTECTION MEASURES_____

DOES THE TANK APPEAR TO BE STRUCTURALLY SOUND & IN GOOD CONDITION: Yes [X] No [ ]
REFERENCE DRAWING NO./Date: SK Dwg No. 88-64200-157, 4-6-84. Rev. 6-15-84
CONCLUSIONS - IS THIS TANK FIT FOR USE: Yes [X] No [ ]

REMARKS: Old Tank No. 152

TANK EVALUATION FORM

SAFETY-KLEEN
HERBRON OH

TANK NO./FARM: 32-37, 39-45, 63/1 DATE: 3/22/89 BY: JW

IS THIS AN EXISTING [X] OR A NEW TANK [ ]

SUFFICIENT STRUCTURAL STRENGTH:

BY MANUFACTURER DATA OR DESIGN STANDARDS: UL 142 and NACE RP-01-78

BY CALCULATION:

1. Stress at the bottom head joints for tanks

$$S = \frac{a\,M}{\pi R^2 T} + \frac{W}{\pi D T}$$

a - Conversion factor (12 in./foot)
M - wind moment at bottom weld joint, in pound-feet.
W - weight of full tank in pounds (steel wt. and content) of content Sp.gr=1.3
D - tank diameter in inches
R - tank radius in inches
T - tank thickness in inches (Min. meas'd on all simil tanks)
Allowable stress: 14662 psi for SS
10795 psi for CS

$$M = b\,D H^2$$

b - 16.5 psi, for a wind velocity of 100 mph
D - tank diameter in feet
H - tank height in ft (~~over~~ Incl. skirt)

If the calculated stress is less than or equal to the allowable stress, the tank thickness is satisfactory

S - 2533 psi

2. If the ratio of the tank height to tank diameter is more than 1.5, the tank support should be anchored.

CONCLUSION: Stress < Allowable Stress [X] Stress > Allowable Stress [ ]

COMPATIBILITY WITH THE WASTE: Yes [X] No [ ]

CORROSION RATE: 0.022" Inches Per Year (Max., based on one lowest thickness measu taken on all simil tanks)

CORROSION PROTECTION MEASURE: Adequate [X] Not Adequate [ ]

STRUCTURAL SUPPORT: Adequate [X] Not Adequate [ ]

FOUNDATION SUPPORT: Adequate [X] Not Adequate [ ]

CONDITIONS OF SEAMS OR WELDS: Good [X] Defective [ ] If defective, describe:

CONNECTIONS: In Good Condition [X] Not in Good Condition [ ]

PRESSURE CONTROL: In Good Condition [X]* Not in Good Condition [ ]

ANY PUNCTURES OR DENTS: Yes [ ] No [X]

SCRAPES ON TANK OR ON PROTECTIVE COATINGS: Yes [ ] No [X]

CRACKS Yes [ ] No [X]

CORROSION Yes [ ] No [X]

OTHER STRUCTURAL DAMAGES Yes [ ] No [X]

CONCLUSIONS - IS THIS TANK FIT FOR USE: Yes [X] No [ ] If no, explain:

*Exception possibly for tank 45, which had a slightly concaved roof.

SIGNED [signature]

22
F

TANK INSPECTION/DESIGN FORM

FACILITY NAME AND LOCATION SK Heroll OH R.C. DATE 3/15/89 BY JJ
TANK NO./FARM 32/1 TANK HT/LENGTH: 32'6"/24'6" DIA: 10'6" OD
TYPE OF TANK: Vertical [X] Horizontal [ ] A/G [X] U/G [ ]
CAPACITY: 15,000 gal. MATERIAL STORED/CHARACTERISTICS: Mineral Spirits/Ignitable

TOP HEAD: Dished [X] Cone [ ] Flat [ ] Open Top [ ]
BTM HEAD: Dished [ ] Cone [X] Flat [ ]
TYPE OF SUPPORT: Skirt [X] Legs [ ] Saddles [ ] Slab [ ]

SKIRT HT. 8'0" SKIRT THK: 5/16" SHAPE/SIZE/HT OF LEG SUPPORT: _____

TYPE AND CONDITIONS OF FOUNDATION SUPPORT: Reinforced Concrete Slab, with occasionally hair line cracks in the contai

MATERIAL OF TANK CONSTRUCTION: Stainless Steel T-304 [ ] Carbon Steel [X]
TANK THICKNESS (DWG) SHELL: 5/16" ROOF PLATE: 1/4" BTM PLATE: 5/16"
(FIELD MEAS.): SHELL: 0.31 (Min) ROOF PLATE: 0.250 BTM PLATE: 0.312 (Cone) +
Certified Equipment Mfg. Co. Dwg No. 5260, 1-2-85 +
YEAR BUILT OR ESTIMATED AGE: Feb '86 MANUFACTURER'S NAME: Paul Mueller Co. Dwg No. PC04: 1-17-86, Rev. E, 4-23-86 +
DESIGN STANDARDS: UL 142 and NACE RP-01-78
IS THIS CLASSIFIED AS A NEW TANK? Yes [ ] No [X]

INFORMATION OF NAME PLATE ATTACHED TO THE TANK: None
LEVEL INDICATOR: Yes [X] No [ ] HIGH LEVEL ALARMS: Yes [X] No [ ]
TANK CONNECTIONS: Flanged [X] Screwed [ ]

TANK VENT SIZE: Open Vent _____ Closed Vent 3" Morrison Emergency Vent 24" M/HC
IS THE TANK INSULATED: Yes [X]* No [ ] TANK PAINTED: Yes [X] No [ ]
PIPING: FROM THE TANK TO PROCESS UNIT: A/G X U/G _____
TYPE OF CONNECTIONS: Flanged [ ] Welded [X] Screwed [ ]
All Insulated

CONDITIONS OF CONNECTIONS, SEAMS, WELDS: Good on tank, not observable on piping
CAN THE PIPING, CONNECTION & SEAMS BE VISUALLY INSPECTED DAILY: Yes [X] No [ ]
ARE THERE ANY VISIBLE DENTS, SCRAPES, CORROSIONS ON TANK: Yes [ ] No [X]
IF YES, STATE EXACT LOCATION _____

DOES THE TANK HAVE ANY CONTAINMENTS TO CATCH LEAKS OR SPILLAGE: Yes [X] No [ ]
DISTANCE TO NEAREST TANK/NO 65'/40 CONTAINMENT WALL (Approx.) 48"
PROPERTY LINE (Approx.) >100'
LEAK TEST RESULTS None CORROSION PROTECTION MEASURES Paint

DOES THE TANK APPEAR TO BE STRUCTURALLY SOUND & IN GOOD CONDITION: Yes [X] No [ ]
REFERENCE DRAWING NO./Date: SK Dwg 88-64200-151, 1-2-85, Rev. 0 12-4-88
CONCLUSIONS - IS THIS TANK FIT FOR USE: Yes [X] No [ ]

REMARKS: *At bottom 6" of shaft and the skirt

22

TANK INSPECTION/DESIGN FORM

FACILITY NAME AND LOCATION SK Heroll OH R.C. DATE 3/15/89 BY JLD
TANK NO./FARM 33 / 1 TANK HT/LENGTH: 32'6"/24'6" DIA: 10'6" OD
TYPE OF TANK: Vertical [X] Horizontal [ ] A/G [X] U/G [ ]
CAPACITY: 15,000 gal. MATERIAL STORED/CHARACTERISTICS: Mineral Spirits/Ignitable

TOP HEAD: Dished [X] Cone [ ] Flat [ ] Open Top [ ]
BTM HEAD: Dished [ ] Cone [X] Flat [ ]
TYPE OF SUPPORT: Skirt [X] Legs [ ] Saddles [ ] Slab [ ]

SKIRT HT. 8'0" SKIRT THK: 5/16" SHAPE/SIZE/HT OF LEG SUPPORT: _____

TYPE AND CONDITIONS OF FOUNDATION SUPPORT: Reinforced Concrete Slab, with occasional hair line cracks in the contain

MATERIAL OF TANK CONSTRUCTION: Stainless Steel T-304 [ ] Carbon Steel [X]
TANK THICKNESS (DWG) SHELL: 5/16" ROOF PLATE: 1/4" BTM PLATE: 5/16"
(FIELD MEAS.): SHELL: 0.319 (Min.) ROOF PLATE: 0.251 BTM PLATE: 0.318 (Cone) +

YEAR BUILT OR ESTIMATED AGE: Feb '86 MANUFACTURER'S NAME: Certified Equipment & Mfg. Co. DWG No. 5260, 1-2-85 — Paul Mueller Co. Dwg No. PC04: 1-17-86, Rev. E, 4-23-86
DESIGN STANDARDS: UL 142 and NACE RP-01-78
IS THIS CLASSIFIED AS A NEW TANK? Yes [ ] No [X]

INFORMATION OF NAME PLATE ATTACHED TO THE TANK: None
LEVEL INDICATOR: Yes [X] No [ ] HIGH LEVEL ALARMS: Yes [X] No [ ]
TANK CONNECTIONS: Flanged [X] Screwed [ ]

TANK VENT SIZE: Open Vent _____ Closed Vent 3" Morrison Emergency Vent 24" M/HC
IS THE TANK INSULATED: Yes [X]* No [ ] TANK PAINTED: Yes [X] No [ ]
PIPING: FROM THE TANK TO PROCESS UNIT: A/G X U/G _____
TYPE OF CONNECTIONS: Flanged [ ] Welded [X] Screwed [ ]
All Insulated

CONDITIONS OF CONNECTIONS, SEAMS, WELDS: Good on tank, not observable on piping
CAN THE PIPING, CONNECTION & SEAMS BE VISUALLY INSPECTED DAILY: Yes [X] No [ ]
ARE THERE ANY VISIBLE DENTS, SCRAPES, CORROSIONS ON TANK: Yes [ ] No [X]
IF YES, STATE EXACT LOCATION _____

DOES THE TANK HAVE ANY CONTAINMENTS TO CATCH LEAKS OR SPILLAGE: Yes [X] No [ ]
DISTANCE TO NEAREST TANK/NO 58"/32,34 CONTAINMENT WALL (Approx.) 48"
PROPERTY LINE (Approx.) >100'
LEAK TEST RESULTS None CORROSION PROTECTION MEASURES Paint

DOES THE TANK APPEAR TO BE STRUCTURALLY SOUND & IN GOOD CONDITION: Yes [X] No [ ]
REFERENCE DRAWING NO./Date: SK DWG 88-64200-151, 1-2-85, Rev. 0 12-4-88
CONCLUSIONS - IS THIS TANK FIT FOR USE: Yes [X] No [ ]

REMARKS: *At bottom 6" of shaft and the shell

22

TANK INSPECTION/DESIGN FORM

FACILITY NAME AND LOCATION SK Hercon OH R.C. DATE 3/15/89 BY JLU
TANK NO./FARM 34/1 TANK HT/LENGTH: 32'6"/24'6" DIA: 10'6" OD
TYPE OF TANK: Vertical [X] Horizontal [ ] A/G [X] U/G [ ]
CAPACITY: 15,000 gal. MATERIAL STORED/CHARACTERISTICS: Mineral Spirits/Ignitable

TOP HEAD: Dished [X] Cone [ ] Flat [ ] Open Top [ ]
BTM HEAD: Dished [ ] Cone [X] Flat [ ]
TYPE OF SUPPORT: Skirt [X] Legs [ ] Saddles [ ] Slab [ ]

SKIRT HT. 8'0" SKIRT THK: 5/16" SHAPE/SIZE/HT OF LEG SUPPORT: _____

TYPE AND CONDITIONS OF FOUNDATION SUPPORT: Reinforced Concrete Slab, with occasionally hairline cracks in the contain

~~MATERIAL OF TANK CONSTRUCTION:~~ Stainless Steel T-304 [ ] Carbon Steel [X]
TANK THICKNESS (DWG) SHELL: 5/16" ROOF PLATE: 1/4" BTM PLATE: 5/16"
(FIELD MEAS.): SHELL: 0.318 (Min.) ROOF PLATE: 0.251 BTM PLATE: 0.314 (Cone) +

YEAR BUILT OR ESTIMATED AGE: Feb '86 MANUFACTURER'S NAME: Certified Equipment Mfg. Co. DWG No. 5260, 1-2-85 +
DESIGN STANDARDS: UL 142 and NACE RP-01-78 Paul Mueller Co. Dwg No. PC04-1-17-86, Rev. E, 4-23-86
IS THIS CLASSIFIED AS A NEW TANK? Yes [ ] No [X] +

INFORMATION OF NAME PLATE ATTACHED TO THE TANK: None
LEVEL INDICATOR: Yes [X] No [ ] HIGH LEVEL ALARMS: Yes [X] No [ ]
TANK CONNECTIONS: Flanged [X] Screwed [ ]

TANK VENT SIZE: Open Vent _____ Closed Vent 3" Morrison Emergency Vent 24" M/H Co
IS THE TANK INSULATED: Yes [X]* No [ ] TANK PAINTED: Yes [X] No [ ]
PIPING: FROM THE TANK TO PROCESS UNIT: A/G X U/G _____
TYPE OF CONNECTIONS: Flanged [ ] Welded [X] Screwed [ ]
All Insulated

CONDITIONS OF CONNECTIONS, SEAMS, WELDS: Good on tank, not observable on piping
CAN THE PIPING, CONNECTION & SEAMS BE VISUALLY INSPECTED DAILY: Yes [X] No [ ]
ARE THERE ANY VISIBLE DENTS, SCRAPES, CORROSIONS ON TANK: Yes [ ] No [X]
IF YES, STATE EXACT LOCATION _____

DOES THE TANK HAVE ANY CONTAINMENTS TO CATCH LEAKS OR SPILLAGE: Yes [X] No [ ]
DISTANCE TO NEAREST TANK/NO 58"/33,35 CONTAINMENT WALL (Approx.) 48" +
PROPERTY LINE (Approx.) >100'
LEAK TEST RESULTS None CORROSION PROTECTION MEASURES Paint

DOES THE TANK APPEAR TO BE STRUCTURALLY SOUND & IN GOOD CONDITION: Yes [X] No [ ]
REFERENCE DRAWING NO./Date: SK DWG 88-64200-151, 1-2-85, Rev. 0 12-4-88
CONCLUSIONS - IS THIS TANK FIT FOR USE: Yes [X] No [ ]

REMARKS: *At bottom 6" of shell and the skirt

12
7

TANK INSPECTION/DESIGN FORM

FACILITY NAME AND LOCATION SK Hecoll OH R.C. DATE 3/15/89 BY J.W.
TANK NO./FARM 35 / 1 TANK HT/LENGTH: 32'6"/24'6" DIA: 10'6" OD
TYPE OF TANK: Vertical [X] Horizontal [ ] A/G [X] U/G [ ]
CAPACITY: 15,000 gal. MATERIAL STORED/CHARACTERISTICS: Mineral Spirits/Ignitable

TOP HEAD: Dished [X] Cone [ ] Flat [ ] Open Top [ ]
BTM HEAD: Dished [ ] Cone [X] Flat [ ]
TYPE OF SUPPORT: Skirt [X] Legs [ ] Saddles [ ] Slab [ ]

SKIRT HT. 8'0" SKIRT THK: 5/16" SHAPE/SIZE/HT OF LEG SUPPORT: _____

TYPE AND CONDITIONS OF FOUNDATION SUPPORT: Reinforced Concrete Slab, with occasionally hair line cracks in the center

MATERIAL OF TANK CONSTRUCTION: Stainless Steel T-304 [ ] Carbon Steel [X]
TANK THICKNESS (DWG) SHELL: 5/16" ROOF PLATE: 1/4" BTM PLATE: 5/16"
(FIELD MEAS.): SHELL: 0.311 ROOF PLATE: 0.250 BTM PLATE: 0.316 (Cone)

YEAR BUILT OR ESTIMATED AGE: FEB '86 MANUFACTURER'S NAME: Certified Equipment & Mfg. Co. DWG No. 5260, 1-2-85 / Paul Mueller Co. Dwg No. PC04: 1-17-86, Rev. E, 4-23-86
DESIGN STANDARDS: UL 142 and NACE RP-01-78
IS THIS CLASSIFIED AS A NEW TANK? Yes [ ] No [X]

INFORMATION OF NAME PLATE ATTACHED TO THE TANK: None
LEVEL INDICATOR: Yes [X] No [ ] HIGH LEVEL ALARMS: Yes [X] No [ ]
TANK CONNECTIONS: Flanged [X] Screwed [ ]

TANK VENT SIZE: Open Vent _____ Closed Vent 3" Morrison Emergency Vent 24" M/HC
IS THE TANK INSULATED: Yes [X]* No [ ] TANK PAINTED: Yes [X] No [ ]
PIPING: FROM THE TANK TO PROCESS UNIT: A/G X U/G _____
TYPE OF CONNECTIONS: Flanged [ ] Welded [X] Screwed [ ]
All Insulated

CONDITIONS OF CONNECTIONS, SEAMS, WELDS: Good on tank, not observable on piping
CAN THE PIPING, CONNECTION & SEAMS BE VISUALLY INSPECTED DAILY: Yes [X] No [ ]
ARE THERE ANY VISIBLE DENTS, SCRAPES, CORROSIONS ON TANK: Yes [ ] No [X]
IF YES, STATE EXACT LOCATION _____

DOES THE TANK HAVE ANY CONTAINMENTS TO CATCH LEAKS OR SPILLAGE: Yes [X] No [ ]
DISTANCE TO NEAREST TANK/NO 58"/34.36 CONTAINMENT WALL (Approx.) 48"
PROPERTY LINE (Approx.) >100'
LEAK TEST RESULTS None CORROSION PROTECTION MEASURES Paint

DOES THE TANK APPEAR TO BE STRUCTURALLY SOUND & IN GOOD CONDITION: Yes [X] No [ ]
REFERENCE DRAWING NO./Date: SK DWG 88-64200-151, 1-2-85, Rev. 0 12-4-88
CONCLUSIONS - IS THIS TANK FIT FOR USE: Yes [X] No [ ]

REMARKS: *At bottom 6" of shaft and the skirt

7

L2
[

TANK INSPECTION/DESIGN FORM

FACILITY NAME AND LOCATION SK Heroin OH R.C. DATE 3/15/89 BY JLD
TANK NO./FARM 36/1 TANK HT/LENGTH: 32'6"/24'6" DIA: 10'6" OD
TYPE OF TANK: Vertical [X] Horizontal [ ] A/G [X] U/G [ ]
CAPACITY: 15,000 gal. MATERIAL STORED/CHARACTERISTICS: Mineral Spirits/Ignitable

TOP HEAD: Dished [X] Cone [ ] Flat [ ] Open Top [ ]
BTM HEAD: Dished [ ] Cone [X] Flat [ ]
TYPE OF SUPPORT: Skirt [X] Legs [ ] Saddles [ ] Slab [ ]

SKIRT HT. 8'0" SKIRT THK: 5/16" SHAPE/SIZE/HT OF LEG SUPPORT: _____

TYPE AND CONDITIONS OF FOUNDATION SUPPORT: Reinforced Concrete Slab, with occasionally hair line cracks in the conta

MATERIAL OF TANK CONSTRUCTION: Stainless Steel T-304 [ ] Carbon Steel [X]
TANK THICKNESS (DWG) SHELL: 5/16" ROOF PLATE: 1/4" BTM PLATE: 5/16"
(FIELD MEAS.): SHELL: 0.315" (MIN) ROOF PLATE: 0.249" BTM PLATE: 0.317 (Cone)
Certified Equipment & Mfg. Co. DWG No. 5260, 1-2-85
YEAR BUILT OR ESTIMATED AGE: FEB '86 MANUFACTURER'S NAME: Paul Mueller Co. Dwg No. PC04 1-17-86, Rev. E, 4-23-8
DESIGN STANDARDS: UL 142 and NACE RP-01-78
IS THIS CLASSIFIED AS A NEW TANK? Yes [ ] No [X]

INFORMATION OF NAME PLATE ATTACHED TO THE TANK: None
LEVEL INDICATOR: Yes [X] No [ ] HIGH LEVEL ALARMS: Yes [X] No [ ]
TANK CONNECTIONS: Flanged [X] Screwed [ ]

TANK VENT SIZE: Open Vent _____ Closed Vent 3" Morrison Emergency Vent 24" M/H
IS THE TANK INSULATED: Yes [X]* No [ ] TANK PAINTED: Yes [X] No [ ]
PIPING: FROM THE TANK TO PROCESS UNIT: A/G X U/G _____
TYPE OF CONNECTIONS: Flanged [ ] Welded [X] Screwed [ ]
All Insulated

CONDITIONS OF CONNECTIONS, SEAMS, WELDS: Good on tank, not observable on piping
CAN THE PIPING, CONNECTION & SEAMS BE VISUALLY INSPECTED DAILY: Yes [X] No [ ]
ARE THERE ANY VISIBLE DENTS, SCRAPES, CORROSIONS ON TANK: Yes [ ] No [X]
IF YES, STATE EXACT LOCATION _____

DOES THE TANK HAVE ANY CONTAINMENTS TO CATCH LEAKS OR SPILLAGE: Yes [X] No [ ]
DISTANCE TO NEAREST TANK/NO 58"/35,37 CONTAINMENT WALL (Approx.) 48"
PROPERTY LINE (Approx.) >100'
LEAK TEST RESULTS None CORROSION PROTECTION MEASURES Paint

DOES THE TANK APPEAR TO BE STRUCTURALLY SOUND & IN GOOD CONDITION: Yes [X] No [ ]
REFERENCE DRAWING NO./Date: SK DWG 88-64200-151, 1-2-85, Rev. 0 12-4-88
CONCLUSIONS - IS THIS TANK FIT FOR USE: Yes [X] No [ ]

REMARKS: *At bottom 6" of shaft and the skirt

Wang Engineering

TANK INSPECTION/DESIGN FORM

FACILITY NAME AND LOCATION SK Hercon OH R.C. DATE 3/15/89 BY JJ
TANK NO./FARM 37/1 TANK HT/LENGTH: 32'6"/24'6" DIA: 10'6" OD
TYPE OF TANK: Vertical [X] Horizontal [ ] A/G [X] U/G [ ]
CAPACITY: 15,000 gal. MATERIAL STORED/CHARACTERISTICS: Mineral Spirits/Ignitable

TOP HEAD: Dished [X] Cone [ ] Flat [ ] Open Top [ ]
BTM HEAD: Dished [ ] Cone [X] Flat [ ]
TYPE OF SUPPORT: Skirt [X] Legs [ ] Saddles [ ] Slab [ ]

SKIRT HT. 8'0" SKIRT THK: 5/16" SHAPE/SIZE/HT OF LEG SUPPORT: _____

TYPE AND CONDITIONS OF FOUNDATION SUPPORT: Reinforced Concrete Slab, with occasionally hair line cracks in the contai

MATERIAL OF TANK CONSTRUCTION: Stainless Steel T-304 [ ] Carbon Steel [X]
TANK THICKNESS (DWG) SHELL: 5/16" ROOF PLATE: 1/4" BTM PLATE: 5/16"
(FIELD MEAS.): SHELL: 0.311" (Min.) ROOF PLATE: 0.244" BTM PLATE: 0.308 (Cone) +
Certified Equipment & Eng. Co. DWG. No. 5260, 1-2-85 —
YEAR BUILT OR ESTIMATED AGE: FEB '86 MANUFACTURER'S NAME: Paul Mueller Co. Dwg. No. PC04: 1-17-86, Rev. E, 4-23-86
DESIGN STANDARDS: UL 142 and NACE RP-01-78 +
IS THIS CLASSIFIED AS A NEW TANK? Yes [ ] No [X]

INFORMATION OF NAME PLATE ATTACHED TO THE TANK: None
LEVEL INDICATOR: Yes [X] No [ ] HIGH LEVEL ALARMS: Yes [X] No [ ]
TANK CONNECTIONS: Flanged [X] Screwed [ ]

TANK VENT SIZE: Open Vent _____ Closed Vent 3" Morrison Emergency Vent 24" M/HC
IS THE TANK INSULATED: Yes [X] No [ ] TANK PAINTED: Yes [X] No [ ]
PIPING: FROM THE TANK TO PROCESS UNIT: A/G X U/G _____
TYPE OF CONNECTIONS: Flanged [ ] Welded [X] Screwed [ ]
All Insulated

CONDITIONS OF CONNECTIONS, SEAMS, WELDS: Good on tank, not observable on piping
CAN THE PIPING, CONNECTION & SEAMS BE VISUALLY INSPECTED DAILY: Yes [X] No [ ]
ARE THERE ANY VISIBLE DENTS, SCRAPES, CORROSIONS ON TANK: Yes [ ] No [X]
IF YES, STATE EXACT LOCATION _____

DOES THE TANK HAVE ANY CONTAINMENTS TO CATCH LEAKS OR SPILLAGE: Yes [X] No [ ]
DISTANCE TO NEAREST TANK/NO 58"/36 CONTAINMENT WALL (Approx.) 48"
PROPERTY LINE (Approx.) >100'
LEAK TEST RESULTS None CORROSION PROTECTION MEASURES Paint

DOES THE TANK APPEAR TO BE STRUCTURALLY SOUND & IN GOOD CONDITION: Yes [X] No [ ]
REFERENCE DRAWING NO./Date: SK DWG 88-64200-151, 1-2-85, Rev. 0 12-4-88
CONCLUSIONS - IS THIS TANK FIT FOR USE: Yes [X] No [ ]

REMARKS: _____

L2

TANK INSPECTION/DESIGN FORM

FACILITY NAME AND LOCATION SK Hercon OH R.C. DATE 3/15/89 BY JLU
TANK NO./FARM 39/1 TANK HT/LENGTH: 32'6"/24'6" DIA: 10'6" OD
TYPE OF TANK: Vertical [X] Horizontal [ ] A/G [X] U/G [ ]
CAPACITY: 15,000 gal. MATERIAL STORED/CHARACTERISTICS: Mineral Spirits/Ignitable

TOP HEAD: Dished [X] Cone [ ] Flat [ ] Open Top [ ]
BTM HEAD: Dished [ ] Cone [X] Flat [ ]
TYPE OF SUPPORT: Skirt [X] Legs [ ] Saddles [ ] Slab [ ]

SKIRT HT. 8'0" SKIRT THK: 5/16" SHAPE/SIZE/HT OF LEG SUPPORT: _____

TYPE AND CONDITIONS OF FOUNDATION SUPPORT: Reinforced Concrete Slab, with occasionally hair line cracks in the contain

MATERIAL OF TANK CONSTRUCTION: Stainless Steel T-304 [ ] Carbon Steel [X]
TANK THICKNESS (DWG) SHELL: 5/16" ROOF PLATE: 1/4" BTM PLATE: 5/16"
(FIELD MEAS.): SHELL: 0.304" (Min.) ROOF PLATE: 0.242" BTM PLATE: 0.317" (Core) + Certified Equipment & Mfg. Co. DWG No. 5260, 1-2-85 + Paul Mueller Co. Drg No. PC04-1-17-86, Rev. E, 4-23-86

YEAR BUILT OR ESTIMATED AGE: Feb '86 MANUFACTURER'S NAME: _____
DESIGN STANDARDS: UL 142 and NACE RP-01-78
IS THIS CLASSIFIED AS A NEW TANK? Yes [ ] No [X]

INFORMATION OF NAME PLATE ATTACHED TO THE TANK: None
LEVEL INDICATOR: Yes [X] No [ ] HIGH LEVEL ALARMS: Yes [X] No [ ]
TANK CONNECTIONS: Flanged [X] Screwed [ ]

TANK VENT SIZE: Open Vent _____ Closed Vent 3" Morrison Emergency Vent 24" M/H Co
IS THE TANK INSULATED: Yes [X]* No [ ] TANK PAINTED: Yes [X] No [ ]
PIPING: FROM THE TANK TO PROCESS UNIT: A/G X U/G _____
TYPE OF CONNECTIONS: Flanged [ ] Welded [X] Screwed [ ]
All Insulated

CONDITIONS OF CONNECTIONS, SEAMS, WELDS: Good on tank, not accessible on piping
CAN THE PIPING, CONNECTION & SEAMS BE VISUALLY INSPECTED DAILY: Yes [X] No [ ]
ARE THERE ANY VISIBLE DENTS, SCRAPES, CORROSIONS ON TANK: Yes [ ] No [X]
IF YES, STATE EXACT LOCATION _____

DOES THE TANK HAVE ANY CONTAINMENTS TO CATCH LEAKS OR SPILLAGE: Yes [X] No [ ]
DISTANCE TO NEAREST TANK/NO 58"/40 CONTAINMENT WALL (Approx.) 44"
PROPERTY LINE (Approx.) >100'
LEAK TEST RESULTS None CORROSION PROTECTION MEASURES Paint

DOES THE TANK APPEAR TO BE STRUCTURALLY SOUND & IN GOOD CONDITION: Yes [X] No [ ]
REFERENCE DRAWING NO./Date: SK DWG 88-64200-151, 1-2-85, Rev. 0 12-4-88
CONCLUSIONS - IS THIS TANK FIT FOR USE: Yes [X] No [ ]

REMARKS: *At bottom 6" of shaft and the skirt

Wang Engineering

L2

TANK INSPECTION/DESIGN FORM

FACILITY NAME AND LOCATION SK-Hercoll OH R.C. DATE 3/15/89 BY JLU
TANK NO./FARM 40/1 TANK HT/LENGTH: 32'6"/24'6" DIA: 10'6" OD
TYPE OF TANK: Vertical [X] Horizontal [ ] A/G [X] U/G [ ]
CAPACITY: 15,000 gal. MATERIAL STORED/CHARACTERISTICS: Mineral Spirits/Ignitable

TOP HEAD: Dished [X] Cone [ ] Flat [ ] Open Top [ ]
BTM HEAD: Dished [ ] Cone [X] Flat [ ]
TYPE OF SUPPORT: Skirt [X] Legs [ ] Saddles [ ] Slab [ ]

SKIRT HT. 8'0" SKIRT THK: 5/16" SHAPE/SIZE/HT OF LEG SUPPORT: _____

TYPE AND CONDITIONS OF FOUNDATION SUPPORT: Reinforced Concrete Slab, with occasionally hair line cracks in the contain

MATERIAL OF TANK CONSTRUCTION: Stainless Steel T-304 [ ] Carbon Steel [X]
TANK THICKNESS (DWG) SHELL: 5/16" ROOF PLATE: 1/4" BTM PLATE: 5/16"
(FIELD MEAS.): SHELL: 0.302" (Min.) ROOF PLATE: 0.248" BTM PLATE: 0.306" (Cone)

YEAR BUILT OR ESTIMATED AGE: FEB '86 MANUFACTURER'S NAME: Certified Equipment & Mfg. Co. DWG No. 5260, 1-2-85 Paul Mueller Co. Dwg No. PC04-1-17-86, Rev. E, 4-23-86
DESIGN STANDARDS: UL 142 and NACE RP-01-78
IS THIS CLASSIFIED AS A NEW TANK? Yes [ ] No [X]

INFORMATION OF NAME PLATE ATTACHED TO THE TANK: None
LEVEL INDICATOR: Yes [X] No [ ] HIGH LEVEL ALARMS: Yes [X] No [ ]
TANK CONNECTIONS: Flanged [X] Screwed [ ]

TANK VENT SIZE: Open Vent _____ Closed Vent 3" Morrison Emergency Vent 24" M/HC
IS THE TANK INSULATED: Yes [X]* No [ ] TANK PAINTED: Yes [X] No [ ]
PIPING: FROM THE TANK TO PROCESS UNIT: A/G X U/G _____
TYPE OF CONNECTIONS: Flanged [ ] Welded [X]. Screwed [ ]
All Insulated

CONDITIONS OF CONNECTIONS, SEAMS, WELDS: Good on tank, not observable on piping
CAN THE PIPING, CONNECTION & SEAMS BE VISUALLY INSPECTED DAILY: Yes [X] No [ ]
ARE THERE ANY VISIBLE DENTS, SCRAPES, CORROSIONS ON TANK: Yes [ ] No [X]
IF YES, STATE EXACT LOCATION _____

DOES THE TANK HAVE ANY CONTAINMENTS TO CATCH LEAKS OR SPILLAGE: Yes [X] No [ ]
DISTANCE TO NEAREST TANK/NO 58'/39,41 CONTAINMENT WALL (Approx.) 44"
PROPERTY LINE (Approx.) >100'
LEAK TEST RESULTS None CORROSION PROTECTION MEASURES Paint

DOES THE TANK APPEAR TO BE STRUCTURALLY SOUND & IN GOOD CONDITION: Yes [X] No [ ]
REFERENCE DRAWING NO./Date: SK DWG 88-64200-151, 1-2-85, Rev. 0 12-4-88
CONCLUSIONS - IS THIS TANK FIT FOR USE: Yes [X] No [ ]

REMARKS: *At bottom 6" of shaft and the skirt

L2
r

TANK INSPECTION/DESIGN FORM

FACILITY NAME AND LOCATION SK Hercon of R.C. DATE 3/15/89 BY J.W.
TANK NO./FARM 41/1 TANK HT/LENGTH: 32'6"/24'6" DIA: 10'6" OD
TYPE OF TANK: Vertical [X] Horizontal [ ] A/G [X] U/G [ ]
CAPACITY: 15,000 gal. MATERIAL STORED/CHARACTERISTICS: Mineral Spirits/Ignitable

TOP HEAD: Dished [X] Cone [ ] Flat [ ] Open Top [ ]
BTM HEAD: Dished [ ] Cone [X] Flat [ ]
TYPE OF SUPPORT: Skirt [X] Legs [ ] Saddles [ ] Slab [ ]

SKIRT HT. 8'0" SKIRT THK: 5/16" SHAPE/SIZE/HT OF LEG SUPPORT: _____

TYPE AND CONDITIONS OF FOUNDATION SUPPORT: Reinforced Concrete Slab, with occasionally hair line cracks in the contain a

MATERIAL OF TANK CONSTRUCTION: Stainless Steel T-304 [ ] Carbon Steel [X]
TANK THICKNESS (DWG) SHELL: 5/16" ROOF PLATE: 1/4" BTM PLATE: 5/16"
(FIELD MEAS.): SHELL: 0.31" (Min.) ROOF PLATE: 0.238" BTM PLATE: 0.307" (Cone)

YEAR BUILT OR ESTIMATED AGE: Feb '86 MANUFACTURER'S NAME: Certified Equipment & Mfg. Co. Dwg No. 5260, 1-2-85 / Paul Mueller Co. Dwg No. PC04-1-17-86, Rev. E, 4-23-86
DESIGN STANDARDS: UL 142 and NACE RP-01-78
IS THIS CLASSIFIED AS A NEW TANK? Yes [ ] No [X]

INFORMATION OF NAME PLATE ATTACHED TO THE TANK: None
LEVEL INDICATOR: Yes [X] No [ ] HIGH LEVEL ALARMS: Yes [X] No [ ]
TANK CONNECTIONS: Flanged [X] Screwed [ ]

TANK VENT SIZE: Open Vent _____ Closed Vent 3" Morrison Emergency Vent 24" M/HC
IS THE TANK INSULATED: Yes [X]* No [ ] TANK PAINTED: Yes [X] No [ ]
PIPING: FROM THE TANK TO PROCESS UNIT: A/G X U/G _____
TYPE OF CONNECTIONS: Flanged [ ] Welded [X] Screwed [ ]
All Insulated

CONDITIONS OF CONNECTIONS, SEAMS, WELDS: Good on tank, not observable on piping
CAN THE PIPING, CONNECTION & SEAMS BE VISUALLY INSPECTED DAILY: Yes [X] No [ ]
ARE THERE ANY VISIBLE DENTS, SCRAPES, CORROSIONS ON TANK: Yes [ ] No [X]
IF YES, STATE EXACT LOCATION _____

DOES THE TANK HAVE ANY CONTAINMENTS TO CATCH LEAKS OR SPILLAGE: Yes [X] No [ ]
DISTANCE TO NEAREST TANK/NO 58"/40,42 CONTAINMENT WALL (Approx.) 44"
PROPERTY LINE (Approx.) >100'
LEAK TEST RESULTS None CORROSION PROTECTION MEASURES Paint

DOES THE TANK APPEAR TO BE STRUCTURALLY SOUND & IN GOOD CONDITION: Yes [X] No [ ]
REFERENCE DRAWING NO./Date: SK DWG 88-64200-151, 1-2-85, Rev. 0 12-4-88
CONCLUSIONS - IS THIS TANK FIT FOR USE: Yes [X] No [ ]

REMARKS: *At bottom 6" of shaft and the skirt

TANK INSPECTION/DESIGN FORM

FACILITY NAME AND LOCATION SK-Hercon on R.C. DATE 3/15/89 BY [illegible]
TANK NO./FARM 42/1 TANK HT/LENGTH: 32'6"/24'6" DIA: 10'6" OD
TYPE OF TANK: Vertical [X] Horizontal [ ] A/G [X] U/G [ ]
CAPACITY: 15,000 gal. MATERIAL STORED/CHARACTERISTICS: Mineral Spirits/Ignitable

TOP HEAD: Dished [X] Cone [ ] Flat [ ] Open Top [ ]
BTM HEAD: Dished [ ] Cone [X] Flat [ ]
TYPE OF SUPPORT: Skirt [X] Legs [ ] Saddles [ ] Slab [ ]

SKIRT HT. 8'0" SKIRT THK: 5/16" SHAPE/SIZE/HT OF LEG SUPPORT: _____

TYPE AND CONDITIONS OF FOUNDATION SUPPORT: Reinforced Concrete Slab, with occasionally hair line cracks in the contain[illegible]

MATERIAL OF TANK CONSTRUCTION: Stainless Steel T-304 [ ] Carbon Steel [X]
TANK THICKNESS (DWG) SHELL: 5/16" ROOF PLATE: 1/4" BTM PLATE: 5/16"
(FIELD MEAS.): SHELL: 0.301" (Min.) ROOF PLATE: 0.231" BTM PLATE: 0.308" (Core)

YEAR BUILT OR ESTIMATED AGE: FEB '86 MANUFACTURER'S NAME: Certified Equipment & Mfg. Co. DWG No. 5260, 1-2-85 Paul Mueller Co. Dwg No. PC04-[illegible] 1-17-86, Rev. E, 4-23-86
DESIGN STANDARDS: UL 142 and NACE RP-01-78
IS THIS CLASSIFIED AS A NEW TANK? Yes [ ] No [X]

INFORMATION OF NAME PLATE ATTACHED TO THE TANK: None
LEVEL INDICATOR: Yes [X] No [ ] HIGH LEVEL ALARMS: Yes [X] No [ ]
TANK CONNECTIONS: Flanged [X] Screwed [ ]

TANK VENT SIZE: Open Vent _____ Closed Vent 3" Morrison Emergency Vent 24" M/H Co
IS THE TANK INSULATED: Yes [X]* No [ ] TANK PAINTED: Yes [X] No [ ]
PIPING: FROM THE TANK TO PROCESS UNIT: A/G X U/G _____
TYPE OF CONNECTIONS: Flanged [ ] Welded [X]. Screwed [ ]
All Insulated

CONDITIONS OF CONNECTIONS, SEAMS, WELDS: Good on tank, not observable on piping
CAN THE PIPING, CONNECTION & SEAMS BE VISUALLY INSPECTED DAILY: Yes [X] No [ ]
ARE THERE ANY VISIBLE DENTS, SCRAPES, CORROSIONS ON TANK: Yes [ ] No [X]
IF YES, STATE EXACT LOCATION _____

DOES THE TANK HAVE ANY CONTAINMENTS TO CATCH LEAKS OR SPILLAGE: Yes [X] No [ ]
DISTANCE TO NEAREST TANK/NO 58"/41,43 CONTAINMENT WALL (Approx.) 44"
PROPERTY LINE (Approx.) >100'
LEAK TEST RESULTS None CORROSION PROTECTION MEASURES Paint

DOES THE TANK APPEAR TO BE STRUCTURALLY SOUND & IN GOOD CONDITION: Yes [X] No [ ]
REFERENCE DRAWING NO./Date: SK DWG 88-64200-151, 1-2-85 Rev. 0 12-9-88
CONCLUSIONS - IS THIS TANK FIT FOR USE: Yes [X] No [ ]

REMARKS: *At bottom 6" of shaft and the skirt

Wang Engineering, INC

TANK INSPECTION/DESIGN FORM

FACILITY NAME AND LOCATION SK Hercon OH R.C. DATE 3/15/89 BY JLD
TANK NO./FARM 43/1 TANK HT/LENGTH: 32'6"/24'6" DIA: 10'6" OD
TYPE OF TANK: Vertical [X] Horizontal [ ] A/G [X] U/G [ ]
CAPACITY: 15,000 gal. MATERIAL STORED/CHARACTERISTICS: Mineral Spirits/Ignitable

TOP HEAD: Dished [X] Cone [ ] Flat [ ] Open Top [ ]
BTM HEAD: Dished [ ] Cone [X] Flat [ ]
TYPE OF SUPPORT: Skirt [X] Legs [ ] Saddles [ ] Slab [ ]

SKIRT HT. 8'0" SKIRT THK: 5/16" SHAPE/SIZE/HT OF LEG SUPPORT: _____

TYPE AND CONDITIONS OF FOUNDATION SUPPORT: Reinforced Concrete Slab, with occasionally hair line cracks in the containment area

MATERIAL OF TANK CONSTRUCTION: Stainless Steel T-304 [ ] Carbon Steel [X]
TANK THICKNESS (DWG) SHELL: 5/16" ROOF PLATE: 1/4" BTM PLATE: 5/16"
(FIELD MEAS.): SHELL: 0.257 (Min.) ROOF PLATE: 0.241" BTM PLATE: 0.318 (Cone)

YEAR BUILT OR ESTIMATED AGE: Feb '86 MANUFACTURER'S NAME: Certified Equipment & Mfg. Co. DWG No. 5260, 1-2-85 + Paul Mueller Co. Dwg No. PC04-5 1-17-86, Rev. E, 4-23-86
DESIGN STANDARDS: UL 142 and NACE RP-01-78
IS THIS CLASSIFIED AS A NEW TANK? Yes [ ] No [X]

INFORMATION OF NAME PLATE ATTACHED TO THE TANK: None
LEVEL INDICATOR: Yes [X] No [ ] HIGH LEVEL ALARMS: Yes [X] No [ ]
TANK CONNECTIONS: Flanged [X] Screwed [ ]

TANK VENT SIZE: Open Vent _____ Closed Vent 3" Morrison Emergency Vent 24" M/H Cover
IS THE TANK INSULATED: Yes [X]* No [ ] TANK PAINTED: Yes [X] No [ ]
PIPING: FROM THE TANK TO PROCESS UNIT: A/G X U/G _____
TYPE OF CONNECTIONS: Flanged [ ] Welded [X] Screwed [ ]
All Insulated

CONDITIONS OF CONNECTIONS, SEAMS, WELDS: Good on tank, not observable on piping
CAN THE PIPING, CONNECTION & SEAMS BE VISUALLY INSPECTED DAILY: Yes [X] No [ ]
ARE THERE ANY VISIBLE DENTS, SCRAPES, CORROSIONS ON TANK: Yes [ ] No [X]
IF YES, STATE EXACT LOCATION _____

DOES THE TANK HAVE ANY CONTAINMENTS TO CATCH LEAKS OR SPILLAGE: Yes [X] No [ ]
DISTANCE TO NEAREST TANK/NO 58'/#44 CONTAINMENT WALL (Approx.) 44"
PROPERTY LINE (Approx.) >100'
LEAK TEST RESULTS None CORROSION PROTECTION MEASURES Paint

DOES THE TANK APPEAR TO BE STRUCTURALLY SOUND & IN GOOD CONDITION: Yes [X] No [ ]
REFERENCE DRAWING NO./Date: SK DWG 88-64200-151, 1-2-85 Rev. 0 12-9-88
CONCLUSIONS - IS THIS TANK FIT FOR USE: Yes [X] No [ ]

REMARKS: *At bottom 6" of shaft and the skirt

Wang Engineering, INC

TANK INSPECTION/DESIGN FORM

FACILITY NAME AND LOCATION SK Hescoll OH R.C. DATE 3/15/89 BY [illegible]
TANK NO./FARM 44/1 TANK HT/LENGTH: 32'6"/24'6" DIA: 10'6" OD
TYPE OF TANK: Vertical [X] Horizontal [ ] A/G [X] U/G [ ]
CAPACITY: 15,000 gal. MATERIAL STORED/CHARACTERISTICS: Mineral Spirits/Ignitable

TOP HEAD: Dished [X] Cone [ ] Flat [ ] Open Top [ ]
BTM HEAD: Dished [ ] Cone [X] Flat [ ]
TYPE OF SUPPORT: Skirt [X] Legs [ ] Saddles [ ] Slab [ ]

SKIRT HT. 8'0" SKIRT THK: 5/16" SHAPE/SIZE/HT OF LEG SUPPORT: _____

TYPE AND CONDITIONS OF FOUNDATION SUPPORT: Reinforced Concrete Slab, with occasionally hair line cracks in the containment area

MATERIAL OF TANK CONSTRUCTION: Stainless Steel T-304 [ ] Carbon Steel [X]
TANK THICKNESS (DWG) SHELL: 5/16" ROOF PLATE: 1/4" BTM PLATE: 5/16"
(FIELD MEAS.): SHELL: 0.298 (min) ROOF PLATE: 0.236 BTM PLATE: 0.303 (Corr)

YEAR BUILT OR ESTIMATED AGE: FEB '86 MANUFACTURER'S NAME: Certified Equipment & Mfg. Co. DWG No. 5260, 1-2-85 Paul Mueller Co. Dwg No. PC(4)-5) 1-17-86, Rev. E, 4-23-86
DESIGN STANDARDS: UL 142 and NACE RP-01-78
IS THIS CLASSIFIED AS A NEW TANK? Yes [ ] No [X]

INFORMATION OF NAME PLATE ATTACHED TO THE TANK: None
LEVEL INDICATOR: Yes [X] No [ ] HIGH LEVEL ALARMS: Yes [X] No [ ]
TANK CONNECTIONS: Flanged [X] Screwed [ ]

TANK VENT SIZE: Open Vent _____ Closed Vent 3" Morrison Emergency Vent 24" M/H Cover
IS THE TANK INSULATED: Yes [X]* No [ ] TANK PAINTED: Yes [X] No [ ]
PIPING: FROM THE TANK TO PROCESS UNIT: A/G X U/G _____
TYPE OF CONNECTIONS: Flanged [ ] Welded [X] Screwed [ ]
All Insulated

CONDITIONS OF CONNECTIONS, SEAMS, WELDS: Good on tank, not observable on piping
CAN THE PIPING, CONNECTION & SEAMS BE VISUALLY INSPECTED DAILY: Yes [X] No [ ]
ARE THERE ANY VISIBLE DENTS, SCRAPES, CORROSIONS ON TANK: Yes [ ] No [X]
IF YES, STATE EXACT LOCATION _____

DOES THE TANK HAVE ANY CONTAINMENTS TO CATCH LEAKS OR SPILLAGE: Yes [X] No [ ]
DISTANCE TO NEAREST TANK/NO 58"/43,45 CONTAINMENT WALL (Approx.) 44"
PROPERTY LINE (Approx.) >100'
LEAK TEST RESULTS None CORROSION PROTECTION MEASURES Paint

DOES THE TANK APPEAR TO BE STRUCTURALLY SOUND & IN GOOD CONDITION: Yes [X] No [ ]
REFERENCE DRAWING NO./Date: SK DWG 88-64200-151, 1-2-85 Rev. 0 12-4-88
CONCLUSIONS - IS THIS TANK FIT FOR USE: Yes [X] No [ ]

REMARKS: *At bottom 6" of shaft and the skirt

TANK INSPECTION/DESIGN FORM

FACILITY NAME AND LOCATION SK Hescoll OH R.C. DATE 3/15/89 BY [illegible]
TANK NO./FARM 45/1 TANK HT/LENGTH: 32'6"/24'6" DIA: 10'6" OD
TYPE OF TANK: Vertical [X] Horizontal [ ] A/G [X] U/G [ ]
CAPACITY: 15,000 gal. MATERIAL STORED/CHARACTERISTICS: Mineral Spirits/Ignitable

TOP HEAD: Dished [X] Cone [ ] Flat [ ] Open Top [ ]
BTM HEAD: Dished [ ] Cone [X] Flat [ ]
TYPE OF SUPPORT: Skirt [X] Legs [ ] Saddles [ ] Slab [ ]

SKIRT HT. 8'0" SKIRT THK: 5/16" SHAPE/SIZE/HT OF LEG SUPPORT: _____

TYPE AND CONDITIONS OF FOUNDATION SUPPORT: Reinforced Concrete Slab, with occasionally hair line cracks in the containment area

MATERIAL OF TANK CONSTRUCTION: Stainless Steel T-304 [ ] Carbon Steel [X]
TANK THICKNESS (DWG) SHELL: 5/16" ROOF PLATE: 1/4" BTM PLATE: 5/16"
(FIELD MEAS.): SHELL: 0.303 (Min.) ROOF PLATE: 0.239" BTM PLATE: 0.305" (Cone) + Certified Equipment & M/G. Co. DWG No. 5260, 1-2-85

YEAR BUILT OR ESTIMATED AGE: FEB '86 MANUFACTURER'S NAME: Paul Mueller Co. Dwg No. PC-04-5D 1-17-86, Rev. E, 4-23-86
DESIGN STANDARDS: UL 142 and NACE RP-01-78
IS THIS CLASSIFIED AS A NEW TANK? Yes [ ] No [X]

IFORMATION OF NAME PLATE ATTACHED TO THE TANK: None
LEVEL INDICATOR: Yes [X] No [ ] HIGH LEVEL ALARMS: Yes [X] No [ ]
TANK CONNECTIONS: Flanged [X] Screwed [ ]

TANK VENT SIZE: Open Vent _____ Closed Vent 3" Morrison Emergency Vent 24" M/H Cover
IS THE TANK INSULATED: Yes [X]* No [ ] TANK PAINTED: Yes [X] No [ ]
PIPING: FROM THE TANK TO PROCESS UNIT: A/G X U/G _____
TYPE OF CONNECTIONS: Flanged [ ] Welded [X] Screwed [ ]
All Insulated

CONDITIONS OF CONNECTIONS, SEAMS, WELDS: Good on tank, not observable on piping
CAN THE PIPING, CONNECTION & SEAMS BE VISUALLY INSPECTED DAILY: Yes [X] No [ ]
ARE THERE ANY VISIBLE DENTS, SCRAPES, CORROSIONS ON TANK: Yes [ ] No [X]**
IF YES, STATE EXACT LOCATION ** The tank has a slightly concaved roof.

DOES THE TANK HAVE ANY CONTAINMENTS TO CATCH LEAKS OR SPILLAGE: Yes [X] No [ ]
DISTANCE TO NEAREST TANK/NO 58"/44 CONTAINMENT WALL (Approx.) 44"
PROPERTY LINE (Approx.) >100'
LEAK TEST RESULTS None CORROSION PROTECTION MEASURES Paint

DOES THE TANK APPEAR TO BE STRUCTURALLY SOUND & IN GOOD CONDITION: Yes [X] No [ ]
REFERENCE DRAWING NO./Date: SK DWG 88-64200-151, 1-2-85, Rev. 0 12-4-88
CONCLUSIONS - IS THIS TANK FIT FOR USE: Yes [X] No [ ]

MARKS: *At bottom 6" of shaft and the skirt

Wang Engineering

TANK INSPECTION/DESIGN FORM

FACILITY NAME AND LOCATION SK-Hercon OH R.C. DATE 3/15/89 BY [illegible]
TANK NO./FARM 63/1 TANK HT/LENGTH: 32'6"/24'6" DIA: 10'6" OD
TYPE OF TANK: Vertical [X] Horizontal [ ] A/G [X] U/G [ ]
CAPACITY: 15,000 gal. MATERIAL STORED/CHARACTERISTICS: Mineral Spirits / Ignitable Chlorinated Solvents / Toxic

TOP HEAD: Dished [X] Cone [ ] Flat [ ] Open Top [ ]
BTM HEAD: Dished [ ] Cone [X] Flat [ ]
TYPE OF SUPPORT: Skirt [X] Legs [ ] Saddles [ ] Slab [ ]

SKIRT HT. 8'0" SKIRT THK: 5/16" SHAPE/SIZE/HT OF LEG SUPPORT: _____

TYPE AND CONDITIONS OF FOUNDATION SUPPORT: Reinforced Concrete Slab, with occasionally hair line cracks in the contain.

MATERIAL OF TANK CONSTRUCTION: Stainless Steel T-304 [ ] Carbon Steel [X]
TANK THICKNESS (DWG) SHELL: 5/16" ROOF PLATE: 1/4" BTM PLATE: 5/16"
(FIELD MEAS.): SHELL: 0.3 (Min.) ROOF PLATE: 0.227" BTM PLATE: 0.31" (Cone)

YEAR BUILT OR ESTIMATED AGE: FEB '86 MANUFACTURER'S NAME: Certified Equipment & Mfg. Co. DWG No. 5260, 1-2-85 — Paul Mueller Co. Dwg No. PC 04-1-17-86, Rev. E, 4-23-86
DESIGN STANDARDS: UL 142 and NACE RP-01-78
IS THIS CLASSIFIED AS A NEW TANK? Yes [ ] No [X]

INFORMATION OF NAME PLATE ATTACHED TO THE TANK: None
LEVEL INDICATOR: Yes [X] No [ ] HIGH LEVEL ALARMS: Yes [X] No [ ]
TANK CONNECTIONS: Flanged [X] Screwed [ ]

TANK VENT SIZE: Open Vent _____ Closed Vent 3" Morrison Emergency Vent 24" M/H Co
IS THE TANK INSULATED: Yes [X] No [ ] TANK PAINTED: Yes [X] No [ ]
PIPING: FROM THE TANK TO PROCESS UNIT: A/G X U/G _____
TYPE OF CONNECTIONS: Flanged [ ] Welded [X] Screwed [ ]
All Insulated

CONDITIONS OF CONNECTIONS, SEAMS, WELDS: Good on tank, not observable on piping
CAN THE PIPING, CONNECTION & SEAMS BE VISUALLY INSPECTED DAILY: Yes [X] No [ ]
ARE THERE ANY VISIBLE DENTS, SCRAPES, CORROSIONS ON TANK: Yes [ ] No [X]
IF YES, STATE EXACT LOCATION _____

DOES THE TANK HAVE ANY CONTAINMENTS TO CATCH LEAKS OR SPILLAGE: Yes [X] No [ ]
DISTANCE TO NEAREST TANK/NO 59"/64 CONTAINMENT WALL (Approx.) 45"
PROPERTY LINE (Approx.) >100'
LEAK TEST RESULTS None CORROSION PROTECTION MEASURES Paint

DOES THE TANK APPEAR TO BE STRUCTURALLY SOUND & IN GOOD CONDITION: Yes [X] No [ ]
REFERENCE DRAWING NO./Date: SK DWG 88-64200-151, 1-2-85, Rev. 0 12-4-88
CONCLUSIONS - IS THIS TANK FIT FOR USE: Yes [X] No [ ]

REMARKS: _____

Wang Engineering, Inc.

SAFETY-KLEEN CORP
HEBRON OH

TANK EVALUATION FORM

TANK NO./FARM: 67/1 DATE: 3/22/89 BY: JW

IS THIS AN EXISTING [X] OR A NEW TANK [ ]

SUFFICIENT STRUCTURAL STRENGTH:

BY MANUFACTURER DATA OR DESIGN STANDARDS: UL-142 and NACE-01-78

BY CALCULATION:

1. Stress at the bottom head joints for tanks

$$S = \frac{a\,M}{\pi R^2 T} + \frac{W}{\pi D T}$$

a - Conversion factor (12 in./foot)
M - wind moment at bottom weld joint, in pound-feet.
W - weight of full tank in pounds (steel wt. and content) Content sp. gr. =1.3
D - tank diameter in inches
R - tank radius in inches
T - tank thickness in inches
Allowable stress: 14662 psi for SS
10795 psi for CS

$$M = b\,D H^2$$

b - 16.5 psi, for a wind velocity of 100 mph
D - tank diameter in feet
H - tank height in ft (excl. skirt)

If the calculated stress is less than or equal to the allowable stress, the tank thickness is satisfactory

S - 4263 psi

2. If the ratio of the tank height to tank diameter is more than 1.5, the tank support should be anchored.

CONCLUSION: Stress < Allowable Stress [X] Stress > Allowable Stress [ ]
COMPATIBILITY WITH THE WASTE: Yes [X] No [ ]
CORROSION RATE: 0.006 Inches Per Year (Max.)
CORROSION PROTECTION MEASURE: Adequate [X] Not Adequate [ ]
STRUCTURAL SUPPORT: Adequate [X] Not Adequate [ ]
FOUNDATION SUPPORT: Adequate [X] Not Adequate [ ]
CONDITIONS OF SEAMS OR WELDS: Good [X] Defective [ ] If defective, describe:

CONNECTIONS: In Good Condition [X] Not in Good Condition [ ]
PRESSURE CONTROL: In Good Condition [X] Not in Good Condition [ ]
ANY PUNCTURES OR DENTS: Yes [ ] No [X]
SCRAPES ON TANK OR ON PROTECTIVE COATINGS: Yes [ ] No [X]
CRACKS Yes [ ] No [X]
CORROSION Yes [ ] No [X]
OTHER STRUCTURAL DAMAGES Yes [ ] No [X]
CONCLUSIONS - IS THIS TANK FIT FOR USE: Yes [X] No [ ] If no, explain:

SIGNED

Wang Engineering

TANK INSPECTION/DESIGN FORM

FACILITY NAME AND LOCATION SK Hebron OH R.C. (shift) DATE 3/16/89 BY JiN
TANK NO./FARM 67/1 TANK HT/LENGTH: 36'6"/36'0" DIA: 12'0"
TYPE OF TANK: Vertical [X] Horizontal [ ] A/G [X] U/G [ ]
CAPACITY: 30,000 gal. MATERIAL STORED/CHARACTERISTICS: Mineral Spirits / Ignitable

TOP HEAD: Dished [X] Cone [ ] Flat [ ] Open Top [ ]
BTM HEAD: Dished [ ] Cone [ ] Flat [X]
TYPE OF SUPPORT: Skirt [ ] Legs [ ] Saddles [ ] Slab [X]

SKIRT HT._____ SKIRT THK:_____ SHAPE/SIZE/HT OF LEG SUPPORT:_____

TYPE AND CONDITIONS OF FOUNDATION SUPPORT: Reinforced Concrete Slab, w/ occasional hairline cracks in the containment area

MATERIAL OF TANK CONSTRUCTION: Stainless Steel T-304 [ ] Carbon Steel [X]
TANK THICKNESS (DWG) SHELL: 1/4" ROOF PLATE: 3/16" BTM PLATE: 1/4"
(FIELD MEAS.): SHELL: 0.235" (Min) ROOF PLATE: 0.239" BTM PLATE:_____

YEAR BUILT OR ESTIMATED AGE: * MANUFACTURER'S NAME: Modern Welding Co., Inc.
DESIGN STANDARDS: UL-142 and NACE RP-01-78 DWG No. 10640, 1-9-86, Rev. 4 2-27-86
IS THIS CLASSIFIED AS A NEW TANK? Yes [ ] No [X]

INFORMATION OF NAME PLATE ATTACHED TO THE TANK: UL Tag
LEVEL INDICATOR: Yes [X] No [ ] HIGH LEVEL ALARMS: Yes [X] No [ ]
TANK CONNECTIONS: Flanged [X] Screwed [ ]

TANK VENT SIZE: Open Vent _____ Closed Vent 3" Morrison Emergency Vent 24 M/H Cal.
IS THE TANK INSULATED: Yes [ ] No [X] TANK PAINTED: Yes [X] No [ ]
PIPING: FROM THE TANK TO PROCESS UNIT: A/G X U/G_____
TYPE OF CONNECTIONS: Flanged [X] Welded [X] Screwed [ ] (one screwed connection in the containment area)

CONDITIONS OF CONNECTIONS, SEAMS, WELDS: Good
CAN THE PIPING, CONNECTION & SEAMS BE VISUALLY INSPECTED DAILY: Yes [X] No [ ]
ARE THERE ANY VISIBLE DENTS, SCRAPES, CORROSIONS ON TANK: Yes [ ] No [X]
IF YES, STATE EXACT LOCATION_____

DOES THE TANK HAVE ANY CONTAINMENTS TO CATCH LEAKS OR SPILLAGE: Yes [X] No [ ]
DISTANCE TO NEAREST TANK/NO 46"/66,68 CONTAINMENT WALL (Approx.) 36"
PROPERTY LINE (Approx.) >150'
LEAK TEST RESULTS None CORROSION PROTECTION MEASURES - Paint

DOES THE TANK APPEAR TO BE STRUCTURALLY SOUND & IN GOOD CONDITION: Yes [X] No [ ]
REFERENCE DRAWING NO./Date: SK DWG. 88-64200-154, 11-12-82, Rev. 0 12-4-88
CONCLUSIONS - IS THIS TANK FIT FOR USE: Yes [X] No [ ]

REMARKS: * DESIGNED AND INSTALLED 1982, REINSTALLED JUNE, 1986

APPENDIX 2

Existing Tank Nos.

83a,b; 84a,b; 86 through 88; 89a,b;

91, 92a,b; 94a,b; and 102a,b

in

Tank Farm No. 2

Wang Engineering, Inc.

SAFETY-KLEEN CORP
HEBRON OH

TANK EVALUATION FORM

TANK NO./FARM: 83,84,89,92,94,102/2 DATE: 3/23/89 BY: JW

IS THIS AN EXISTING [X] OR A NEW TANK [ ]

SUFFICIENT STRUCTURAL STRENGTH:

BY MANUFACTURER DATA OR DESIGN STANDARDS: UL-142

BY CALCULATION:

1. Stress at the bottom head joints for tanks

$$S = \frac{a\,M}{\pi R^2 T} + \frac{W}{\pi D T}$$

a - Conversion factor (12 in./foot)
M - wind moment at bottom weld joint, in pound-feet.
W - weight of full tank in pounds (steel wt. and content) Content Sp.gr. = 1.3
D - tank diameter in inches
R - tank radius in inches
T - tank thickness in inches
Allowable stress: 14662 psi for SS
10795 psi for CS

$$M = b\,D H^2$$

b - 16.5 psi, for a wind velocity of 100 mph
D - tank diameter in feet
H - tank height in ft (~~excl.~~ incl. skirt)

If the calculated stress is less than or equal to the allowable stress, the tank thickness is satisfactory

S - 2816 psi

2. If the ratio of the tank height to tank diameter is more than 1.5, the tank support should be anchored.

CONCLUSION: Stress < Allowable Stress [X] Stress > Allowable Stress [ ]

COMPATIBILITY WITH THE WASTE: Yes [X] No [ ]

CORROSION RATE: 0.008 Inches Per Year

CORROSION PROTECTION MEASURE: Adequate [X] Not Adequate [ ]

STRUCTURAL SUPPORT: Adequate [X] Not Adequate [ ]

FOUNDATION SUPPORT: Adequate [X] Not Adequate [ ]

CONDITIONS OF SEAMS OR WELDS: Good [X] Defective [ ] If defective, describe:

CONNECTIONS: In Good Condition [X] Not in Good Condition [ ]

PRESSURE CONTROL: In Good Condition [X] Not in Good Condition [ ]

ANY PUNCTURES OR DENTS: Yes [ ] No [X] Except Minor dents on 83

SCRAPES ON TANK OR ON PROTECTIVE COATINGS: Yes [ ] No [X]

CRACKS Yes [ ] No [X]

CORROSION Yes [ ] No [X]

OTHER STRUCTURAL DAMAGES Yes [ ] No [X]

CONCLUSIONS - IS THIS TANK FIT FOR USE: Yes [X] No [ ] If no, explain:

SIGNED JW

12

TANK INSPECTION/DESIGN FORM

FACILITY NAME AND LOCATION SK Hebron Shaft OH, R.C. DATE 3/16/89 BY JW
TANK NO./FARM 83 a, b #2 TANK HT/LENGTH: 32'6"/11'0" DIA: 10'6"
TYPE OF TANK: Vertical [X] Horizontal [ ] A/G [X] U/G [ ]
CAPACITY: 7,500 (Each) gal. MATERIAL STORED/CHARACTERISTICS: Chlorinated Solvents / Toxic

TOP HEAD: Dished [X] Cone [ ] Flat [ ] Open Top [ ]
BTM HEAD: Dished [ ] Cone [X] Flat [ ]
TYPE OF SUPPORT: Skirt [X] Legs [ ] Saddles [ ] Slab [ ]

SKIRT HT. 8'0" SKIRT THK: 1/4" SHAPE/SIZE/HT OF LEG SUPPORT:

TYPE AND CONDITIONS OF FOUNDATION SUPPORT: Reinforced Concrete Slab, w/ occasional minor hairline cracks

MATERIAL OF TANK CONSTRUCTION: Stainless Steel T-304 [ ] Carbon Steel [X]
TANK THICKNESS (DWG) SHELL: 1/4" ROOF PLATE: 1/4" BTM PLATE: 1/4"
(FIELD MEAS.): SHELL: 0.232" (Min.) ROOF PLATE: 0.237" BTM PLATE: 0.257" (Cone)

YEAR BUILT OR ESTIMATED AGE: May '86 MANUFACTURER'S NAME: **
DESIGN STANDARDS: UL-142
IS THIS CLASSIFIED AS A NEW TANK? Yes [ ] No [X]

INFORMATION OF NAME PLATE ATTACHED TO THE TANK: None
LEVEL INDICATOR: Yes [X] No [ ] HIGH LEVEL ALARMS: Yes [X] No [ ]
TANK CONNECTIONS: Flanged [X] Screwed [ ]

TANK VENT SIZE: Open Vent 8" on b Closed Vent 3" on a Morrison Emergency Vent 24 M/H
IS THE TANK INSULATED: Yes [ ] No [X] TANK PAINTED: Yes [X] No [ ]
PIPING: FROM THE TANK TO PROCESS UNIT: A/G X U/G
TYPE OF CONNECTIONS: Flanged [X] Welded [X] Screwed [ ]
All insulated

CONDITIONS OF CONNECTIONS, SEAMS, WELDS: Good on Tank, but not observable on piping
CAN THE PIPING, CONNECTION & SEAMS BE VISUALLY INSPECTED DAILY: Yes [X] No [ ]
ARE THERE ANY VISIBLE DENTS, SCRAPES, CORROSIONS ON TANK: Yes [X] No [ ]
IF YES, STATE EXACT LOCATION Minor dents at NE bottom of 3rd ring, bottom weld of 4th ring, and on the cone

DOES THE TANK HAVE ANY CONTAINMENTS TO CATCH LEAKS OR SPILLAGE: Yes [X] No [ ]
DISTANCE TO NEAREST TANK/NO 66"/82 84 88 CONTAINMENT WALL (Approx.) 42"
PROPERTY LINE (Approx.) >50'
LEAK TEST RESULTS None CORROSION PROTECTION MEASURES Paint

DOES THE TANK APPEAR TO BE STRUCTURALLY SOUND & IN GOOD CONDITION: Yes [X] No [ ]
REFERENCE DRAWING NO./Date: SK Dwg No. 88-64200-153, 1-10-86, Rev 0 12-9-88 **
CONCLUSIONS - IS THIS TANK FIT FOR USE: Yes [X] No [ ]

REMARKS: * Piggyback

** Modern Welding Co, Inc. Dwg No. 10642, 1-15-86, Rev. 5. 3-27-86

12

TANK INSPECTION/DESIGN FORM

FACILITY NAME AND LOCATION SK Hebron Shaft OH, R.C. DATE 3/16/89 BY JW
TANK NO./FARM 84 a, b*/2 TANK HT/LENGTH: 32'6"/11'0" DIA: 10'6"
TYPE OF TANK: Vertical [X] Horizontal [ ] A/G [X] U/G [ ]
CAPACITY: 7,500 (Each) gal. MATERIAL STORED/CHARACTERISTICS: Chlorinated Solvents / Toxic

TOP HEAD: Dished [X] Cone [ ] Flat [ ] Open Top [ ]
BTM HEAD: Dished [ ] Cone [X] Flat [ ]
TYPE OF SUPPORT: Skirt [X] Legs [ ] Saddles [ ] Slab [ ]

SKIRT HT. 8'0" SKIRT THK: 1/4" SHAPE/SIZE/HT OF LEG SUPPORT: _____

TYPE AND CONDITIONS OF FOUNDATION SUPPORT: Reinforced Concrete Slab, w/ occasional minor hairline cracks

MATERIAL OF TANK CONSTRUCTION: Stainless Steel T-304 [ ] Carbon Steel [X]
TANK THICKNESS (DWG) SHELL: 1/4" ROOF PLATE: 1/4" BTM PLATE: 1/4"
(FIELD MEAS.): SHELL: 0.238" (Min) ROOF PLATE: 0.242" BTM PLATE: 0.248" (Cone) +

YEAR BUILT OR ESTIMATED AGE: May '86 MANUFACTURER'S NAME: **
DESIGN STANDARDS: UL-142
IS THIS CLASSIFIED AS A NEW TANK? Yes [ ] No [ ]

INFORMATION OF NAME PLATE ATTACHED TO THE TANK: None
LEVEL INDICATOR: Yes [X] No [ ] HIGH LEVEL ALARMS: Yes [X] No [ ]
TANK CONNECTIONS: Flanged [X] Screwed [ ]

TANK VENT SIZE: Open Vent 8" on b Closed Vent 3" on a Morrison Emergency Vent 24 M/H
IS THE TANK INSULATED: Yes [ ] No [X] TANK PAINTED: Yes [X] No [ ]
PIPING: FROM THE TANK TO PROCESS UNIT: A/G X U/G _____
TYPE OF CONNECTIONS: Flanged [X] Welded [X] Screwed [ ]
All insulated

CONDITIONS OF CONNECTIONS, SEAMS, WELDS: Good on Tube, but not observable on piping
CAN THE PIPING, CONNECTION & SEAMS BE VISUALLY INSPECTED DAILY: Yes [X] No [ ]
ARE THERE ANY VISIBLE DENTS, SCRAPES, CORROSIONS ON TANK: Yes [ ] No [X]
IF YES, STATE EXACT LOCATION _____

DOES THE TANK HAVE ANY CONTAINMENTS TO CATCH LEAKS OR SPILLAGE: Yes [X] No [ ]
DISTANCE TO NEAREST TANK/NO 66"/83,89 CONTAINMENT WALL (Approx.) 42"
PROPERTY LINE (Approx.) >50'
LEAK TEST RESULTS None CORROSION PROTECTION MEASURES Paint

DOES THE TANK APPEAR TO BE STRUCTURALLY SOUND & IN GOOD CONDITION: Yes [X] No [ ]
REFERENCE DRAWING NO./Date: SK Dwg No. 88-64-200-153, 1-10-86, Rev. 0 12-4-88 **
CONCLUSIONS - IS THIS TANK FIT FOR USE: Yes [X] No [ ]

REMARKS: * Piggyback

** Modern Welding Co, Inc. Dwg No. 10642, 1-15-86, Rev. 5. 3-27-86

12

TANK INSPECTION/DESIGN FORM

FACILITY NAME AND LOCATION SK Hebron Shaft OH, R.C. DATE 3/16/89 BY JW
TANK NO./FARM 89 a, b*/2 TANK HT/LENGTH: 32'6"/11'0" DIA: 10'6"
TYPE OF TANK: Vertical [X] Horizontal [ ] A/G [X] U/G [ ]
CAPACITY: 7,500 (Each) gal. MATERIAL STORED/CHARACTERISTICS: Chlorinated Solvents / Toxic

TOP HEAD: Dished [X] Cone [ ] Flat [ ] Open Top [ ]
BTM HEAD: Dished [ ] Cone [X] Flat [ ]
TYPE OF SUPPORT: Skirt [X] Legs [ ] Saddles [ ] Slab [ ]

SKIRT HT. 8'0" SKIRT THK: 1/4" SHAPE/SIZE/HT OF LEG SUPPORT: _____

TYPE AND CONDITIONS OF FOUNDATION SUPPORT: Reinforced Concrete Slab, w/ occasional minor hairline cracks

MATERIAL OF TANK CONSTRUCTION: Stainless Steel T-304 [ ] Carbon Steel [X]
TANK THICKNESS (DWG) SHELL: 1/4" ROOF PLATE: 1/4" BTM PLATE: 1/4"
(FIELD MEAS.): SHELL: 0.251 (Min.) ROOF PLATE: 0.249" BTM PLATE: 0.247"

YEAR BUILT OR ESTIMATED AGE: May '86 MANUFACTURER'S NAME: * **
DESIGN STANDARDS: UL-142
IS THIS CLASSIFIED AS A NEW TANK? Yes [ ] No [X]

INFORMATION OF NAME PLATE ATTACHED TO THE TANK: None
LEVEL INDICATOR: Yes [X] No [ ] HIGH LEVEL ALARMS: Yes [X] No [ ]
TANK CONNECTIONS: Flanged [X] Screwed [ ]

TANK VENT SIZE: Open Vent 8" on b Closed Vent 3" on a Monitor Emergency Vent 24 M/H
IS THE TANK INSULATED: Yes [ ] No [X] TANK PAINTED: Yes [X] No [ ]
PIPING: FROM THE TANK TO PROCESS UNIT: A/G X U/G _____
TYPE OF CONNECTIONS: Flanged [X] Welded [X] Screwed [ ]
All insulated — Bottom of b

CONDITIONS OF CONNECTIONS, SEAMS, WELDS: Good on Tanks, but not observable on piping
CAN THE PIPING, CONNECTION & SEAMS BE VISUALLY INSPECTED DAILY: Yes [X] No [ ]
ARE THERE ANY VISIBLE DENTS, SCRAPES, CORROSIONS ON TANK: Yes [X] No [ ]
IF YES, STATE EXACT LOCATION Minor paint scratch on the NW

DOES THE TANK HAVE ANY CONTAINMENTS TO CATCH LEAKS OR SPILLAGE: Yes [X] No [ ]
DISTANCE TO NEAREST TANK/NO 61"/94 CONTAINMENT WALL (Approx.) 42"
PROPERTY LINE (Approx.) >50'
LEAK TEST RESULTS None CORROSION PROTECTION MEASURES Paint

DOES THE TANK APPEAR TO BE STRUCTURALLY SOUND & IN GOOD CONDITION: Yes [X] No [ ]
REFERENCE DRAWING NO./Date: SK Dwg No. 88-64200-153, 1-10-86, Rev. 0 12-9-88 **
CONCLUSIONS - IS THIS TANK FIT FOR USE: Yes [X] No [ ]

REMARKS: * Piggyback

** Modern Welding Co, Inc. Dwg No. 10642, 1-15-86, Rev. 5. 3-27-86

12

TANK INSPECTION/DESIGN FORM

FACILITY NAME AND LOCATION SK Hebron Shaft, R.C. DATE 3/16/89 BY JW
TANK NO./FARM 92a, b#2 TANK HT/LENGTH: 32'6"/11'0" DIA: 10'6"
TYPE OF TANK: Vertical [X] Horizontal [ ] A/G [X] U/G [ ]
CAPACITY: 7,500 (Each) gal. MATERIAL STORED/CHARACTERISTICS: Chlorinated Solvents / Toxic

TOP HEAD: Dished [X] Cone [ ] Flat [ ] Open Top [ ]
BTM HEAD: Dished [ ] Cone [X] Flat [ ]
TYPE OF SUPPORT: Skirt [X] Legs [ ] Saddles [ ] Slab [ ]

SKIRT HT. 8'0" SKIRT THK: 1/4" SHAPE/SIZE/HT OF LEG SUPPORT: _____

TYPE AND CONDITIONS OF FOUNDATION SUPPORT: Reinforced Concrete Slab, w/ occasional minor hairline cracks

MATERIAL OF TANK CONSTRUCTION: Stainless Steel T-304 [ ] Carbon Steel [X]
TANK THICKNESS (DWG) SHELL: 1/4" ROOF PLATE: 1/4" BTM PLATE: 1/4"
(FIELD MEAS.): SHELL: 0.243" (Min) ROOF PLATE: 0.244" BTM PLATE: 0.245" (Cone)

YEAR BUILT OR ESTIMATED AGE: May '86 MANUFACTURER'S NAME: **
DESIGN STANDARDS: UL-142
IS THIS CLASSIFIED AS A NEW TANK? Yes [ ] No [X]

INFORMATION OF NAME PLATE ATTACHED TO THE TANK: None
LEVEL INDICATOR: Yes [X] No [ ] HIGH LEVEL ALARMS: Yes [X] No [ ]
TANK CONNECTIONS: Flanged [X] Screwed [ ]

TANK VENT SIZE: Open Vent 8" on b Closed Vent 3" on a Morrison Emergency Vent 24 M/H
IS THE TANK INSULATED: Yes [ ] No [X] TANK PAINTED: Yes [X] No [ ]
PIPING: FROM THE TANK TO PROCESS UNIT: A/G X U/G _____
TYPE OF CONNECTIONS: Flanged [X] Welded [X] Screwed [ ]
All insulated

CONDITIONS OF CONNECTIONS, SEAMS, WELDS: Good on Tank, but not observable on piping
CAN THE PIPING, CONNECTION & SEAMS BE VISUALLY INSPECTED DAILY: Yes [X] No [ ]
ARE THERE ANY VISIBLE DENTS, SCRAPES, CORROSIONS ON TANK: Yes [ ] No [X]
IF YES, STATE EXACT LOCATION _____

DOES THE TANK HAVE ANY CONTAINMENTS TO CATCH LEAKS OR SPILLAGE: Yes [X] No [ ]
DISTANCE TO NEAREST TANK/NO 61"/87 CONTAINMENT WALL (Approx.) >30'
PROPERTY LINE (Approx.) >50'
LEAK TEST RESULTS None CORROSION PROTECTION MEASURES Paint

DOES THE TANK APPEAR TO BE STRUCTURALLY SOUND & IN GOOD CONDITION: Yes [X] No [ ]
REFERENCE DRAWING NO./Date: SK Dwg No. 88-64200-153, 1-10-86, Rev 0 12-9-88 **
CONCLUSIONS - IS THIS TANK FIT FOR USE: Yes [X] No [ ]

REMARKS: * Piggyback

** Moberly Welding Co, Inc. Dwg No. 10642, 1-15-86, Rev. 5. 3-27-86

12

TANK INSPECTION/DESIGN FORM

FACILITY NAME AND LOCATION SK Hebron Shaft, R.C. DATE 3/16/89 BY JW
TANK NO./FARM 94 a, b*/2 TANK HT/LENGTH: 32'6"/11'0" DIA: 10'6"
TYPE OF TANK: Vertical [X] Horizontal [ ] A/G [X] U/G [ ]
CAPACITY: 7,500 (Each) gal. MATERIAL STORED/CHARACTERISTICS: Chlorinated Solvents / Toxic

TOP HEAD: Dished [X] Cone [ ] Flat [ ] Open Top [ ]
BTM HEAD: Dished [ ] Cone [X] Flat [ ]
TYPE OF SUPPORT: Skirt [X] Legs [ ] Saddles [ ] Slab [ ]

SKIRT HT. 8'0" SKIRT THK: 1/4" SHAPE/SIZE/HT OF LEG SUPPORT: _____

TYPE AND CONDITIONS OF FOUNDATION SUPPORT: Reinforced Concrete Slab, w/ occasional minor hairline cracks

MATERIAL OF TANK CONSTRUCTION: Stainless Steel T-304 [ ] Carbon Steel [X]
TANK THICKNESS (DWG) SHELL: 1/4" ROOF PLATE: 1/4" BTM PLATE: 1/4"
(FIELD MEAS.): SHELL: 0.23 (Min.) ROOF PLATE: 0.245" BTM PLATE: 0.247" (Cone)

YEAR BUILT OR ESTIMATED AGE: May '86 MANUFACTURER'S NAME: **
DESIGN STANDARDS: UL-142
IS THIS CLASSIFIED AS A NEW TANK? Yes [ ] No [ ]

INFORMATION OF NAME PLATE ATTACHED TO THE TANK: None
LEVEL INDICATOR: Yes [X] No [ ] HIGH LEVEL ALARMS: Yes [X] No [ ]
TANK CONNECTIONS: Flanged [X] Screwed [ ]

TANK VENT SIZE: Open Vent 8" on b Closed Vent 3" on a Morrison Emergency Vent 24 M/H
IS THE TANK INSULATED: Yes [ ] No [X] TANK PAINTED: Yes [X] No [ ]
PIPING: FROM THE TANK TO PROCESS UNIT: A/G X U/G _____
TYPE OF CONNECTIONS: Flanged [X] Welded [X] Screwed [ ]
All insulated

CONDITIONS OF CONNECTIONS, SEAMS, WELDS: Good on Tank, but not obtainable on piping
CAN THE PIPING, CONNECTION & SEAMS BE VISUALLY INSPECTED DAILY: Yes [X] No [ ]
ARE THERE ANY VISIBLE DENTS, SCRAPES, CORROSIONS ON TANK: Yes [ ] No [X]
IF YES, STATE EXACT LOCATION _____

DOES THE TANK HAVE ANY CONTAINMENTS TO CATCH LEAKS OR SPILLAGE: Yes [X] No [ ]
DISTANCE TO NEAREST TANK/NO 61"/89 CONTAINMENT WALL (Approx.) 42"
PROPERTY LINE (Approx.) >50'
LEAK TEST RESULTS None CORROSION PROTECTION MEASURES Paint

DOES THE TANK APPEAR TO BE STRUCTURALLY SOUND & IN GOOD CONDITION: Yes [X] No [ ]
REFERENCE DRAWING NO./Date: SK Dwg No. 88-64-200-153, 1-10-86, Rev 0 12-4-88 **
CONCLUSIONS - IS THIS TANK FIT FOR USE: Yes [X] No [ ]

REMARKS: * Piggyback

** Moberly Welding Co., Inc. Dwg No. 10642, 1-15-86, Rev. 5. 3-27-86

Wang Engineering

TANK INSPECTION/DESIGN FORM

FACILITY NAME AND LOCATION SK Hebron OH, R.C. Shaft DATE 3/16/89 BY JW
TANK NO./FARM 102 a, b*/2 TANK HT/LENGTH: 32'6"/11'0" DIA: 10'6"
TYPE OF TANK: Vertical [X] Horizontal [ ] A/G [X] U/G [ ]
CAPACITY: 7,500 (Each) gal. MATERIAL STORED/CHARACTERISTICS: Chlorinated Solvents / Toxic

TOP HEAD: Dished [X] Cone [ ] Flat [ ] Open Top [ ]
BTM HEAD: Dished [ ] Cone [X] Flat [ ]
TYPE OF SUPPORT: Skirt [X] Legs [ ] Saddles [ ] Slab [ ]

SKIRT HT. 8'0" SKIRT THK: 1/4" SHAPE/SIZE/HT OF LEG SUPPORT: _____

TYPE AND CONDITIONS OF FOUNDATION SUPPORT: Reinforced Concrete Slab, w/ occasional minor hairline cracks

MATERIAL OF TANK CONSTRUCTION: Stainless Steel T-304 [ ] Carbon Steel [X]
TANK THICKNESS (DWG) SHELL: 1/4" ROOF PLATE: 1/4" BTM PLATE: 1/4"
(FIELD MEAS.): SHELL: 0.248 (Min.) ROOF PLATE: 0.246" BTM PLATE: 0.255 (Cone)

YEAR BUILT OR ESTIMATED AGE: May '86 MANUFACTURER'S NAME: **
DESIGN STANDARDS: UL-142
IS THIS CLASSIFIED AS A NEW TANK? Yes [ ] No [X]

INFORMATION OF NAME PLATE ATTACHED TO THE TANK: None
LEVEL INDICATOR: Yes [X] No [ ] HIGH LEVEL ALARMS: Yes [X] No [ ]
TANK CONNECTIONS: Flanged [X] Screwed [ ]

TANK VENT SIZE: Open Vent 8" on b Closed Vent 3" on a Morrison Emergency Vent 24 M/H
IS THE TANK INSULATED: Yes [X] No [ ] TANK PAINTED: Yes [X] No [ ]
PIPING: FROM THE TANK TO PROCESS UNIT: A/G X U/G _____
All insulated
TYPE OF CONNECTIONS: Flanged [X] Welded [X] Screwed [ ]

CONDITIONS OF CONNECTIONS, SEAMS, WELDS: Good on Tank, but not obtainable on piping
CAN THE PIPING, CONNECTION & SEAMS BE VISUALLY INSPECTED DAILY: Yes [X] No [ ]
ARE THERE ANY VISIBLE DENTS, SCRAPES, CORROSIONS ON TANK: Yes [ ] No [X]
IF YES, STATE EXACT LOCATION _____

DOES THE TANK HAVE ANY CONTAINMENTS TO CATCH LEAKS OR SPILLAGE: Yes [X] No [ ]
DISTANCE TO NEAREST TANK/NO 50"/107 CONTAINMENT WALL (Approx.) >30'
PROPERTY LINE (Approx.) >50'
LEAK TEST RESULTS None CORROSION PROTECTION MEASURES Paint

DOES THE TANK APPEAR TO BE STRUCTURALLY SOUND & IN GOOD CONDITION: Yes [X] No [ ]
REFERENCE DRAWING NO./Date: SK Dwg No. 88-64200-153, 1-10-86, Rev 0 12-9-88 **
CONCLUSIONS - IS THIS TANK FIT FOR USE: Yes [X] No [ ]

REMARKS: * Piggyback

** Modern Welding Co, Inc. Dwg No. 10642, 1-15-86, Rev. 5. 3-27-86

Wang Engineering, Inc.

SAFETY-KLEEN CORP
HEBRON OH

TANK EVALUATION FORM

TK NO./FARM: 86-88, 91/2 DATE: 3/23/89 BY: JW

IS THIS AN EXISTING [X] OR A NEW TANK [ ]

SUFFICIENT STRUCTURAL STRENGTH:

BY MANUFACTURER DATA OR DESIGN STANDARDS: UL-142 and NACE RP-01-78

BY CALCULATION:

1. Stress at the bottom head joints for tanks

$$S = \frac{a\,H}{\pi R^2 T} + \frac{W}{\pi D T}$$

a - Conversion factor (12 in./foot)
H - wind moment at bottom weld joint, in pound-feet.
W - weight of full tank in pounds (steel wt. and content) Content Sp. gr. = 1.3
D - tank diameter in inches
R - tank radius in inches
T - tank thickness in inches (Min. Meas'd on similar tanks)
Allowable stress: 14662 psi for SS
10795 psi for CS

$$M = b\,D H^2$$

b - 16.5 psi, for a wind velocity of 100 mph
D - tank diameter in feet
H - tank height in ft (incl. skirt)

If the calculated stress is less than or equal to the allowable stress, the tank thickness is satisfactory

S - 2533 psi

2. If the ratio of the tank height to tank diameter is more than 1.5, the tank support should be anchored.

CONCLUSION: Stress < Allowable Stress [ ] Stress > Allowable Stress [ ]

COMPATIBILITY WITH THE WASTE: Yes [ ] No [ ]

CORROSION RATE: 0.022" Inches Per Year (Max., based on one lowest thickness measurement taken on all similar tanks)

CORROSION PROTECTION MEASURE: Adequate [X] Not Adequate [ ]

STRUCTURAL SUPPORT: Adequate [X] Not Adequate [ ]

FOUNDATION SUPPORT: Adequate [X] Not Adequate [ ]

CONDITIONS OF SEAMS OR WELDS: Good [X] Defective [ ] If defective, describe:

CONNECTIONS: In Good Condition [X] Not in Good Condition [ ]

PRESSURE CONTROL: In Good Condition [X] Not in Good Condition [ ]

ANY PUNCTURES OR DENTS: Yes [ ] No [X]

SCRAPES ON TANK OR ON PROTECTIVE COATINGS: Yes [ ] No [X]

CRACKS Yes [ ] No [X]

CORROSION Yes [ ] No [X]

OTHER STRUCTURAL DAMAGES Yes [ ] No [X]

CONCLUSIONS - IS THIS TANK FIT FOR USE: Yes [X] No [ ] If no, explain:

SIGNED JWang

Wang Engineering

TANK INSPECTION/DESIGN FORM

FACILITY NAME AND LOCATION SK Hercon on R.C. DATE 3/15/89 BY JLU
TANK NO./FARM 86/2 TANK HT/LENGTH: 32'6"/24'6" DIA: 10'6" OD
TYPE OF TANK: Vertical [X] Horizontal [ ] A/G [X] U/G [ ]
CAPACITY: 15,000 gal. MATERIAL STORED/CHARACTERISTICS: Chlorinated Solvents / To

TOP HEAD: Dished [X] Cone [ ] Flat [ ] Open Top [ ]
BTM HEAD: Dished [ ] Cone [X] Flat [ ]
TYPE OF SUPPORT: Skirt [X] Legs [ ] Saddles [ ] Slab [ ]

SKIRT HT. 8'0" SKIRT THK: 5/16" SHAPE/SIZE/HT OF LEG SUPPORT: _____

TYPE AND CONDITIONS OF FOUNDATION SUPPORT: Reinforced Concrete Slab, with occasionally hair line cracks in the conta

MATERIAL OF TANK CONSTRUCTION: Stainless Steel T-304 [ ] Carbon Steel [X]
TANK THICKNESS (DWG) SHELL: 5/16" ROOF PLATE: 1/4" BTM PLATE: 5/16"
(FIELD MEAS.): SHELL: 0.3" (Min.) ROOF PLATE: 0.236" BTM PLATE: 0.31 (Cone) +
Certified Equipment & Eng. Co. DWG No. 5260, 1-2-85
YEAR BUILT OR ESTIMATED AGE: May 86 MANUFACTURER'S NAME: Paul Mueller Co. Dwg No. PC04. 1-17-86, Rev. E, 4-23-86
DESIGN STANDARDS: UL 142 and NACE RP-01-78
IS THIS CLASSIFIED AS A NEW TANK? Yes [ ] No [X]

INFORMATION OF NAME PLATE ATTACHED TO THE TANK: None
LEVEL INDICATOR: Yes [X] No [ ] HIGH LEVEL ALARMS: Yes [X] No [ ]
TANK CONNECTIONS: Flanged [X] Screwed [ ]

TANK VENT SIZE: Open Vent _____ Closed Vent 3" Morrison Emergency Vent 24" M/HC
IS THE TANK INSULATED: Yes [X] No [ ] TANK PAINTED: Yes [X] No [ ]
PIPING: FROM THE TANK TO PROCESS UNIT: A/G X U/G _____
TYPE OF CONNECTIONS: Flanged [ ] Welded [X] Screwed [ ]
All Insulated
CONDITIONS OF CONNECTIONS, SEAMS, WELDS: Good on tank, not observable on piping
CAN THE PIPING, CONNECTION & SEAMS BE VISUALLY INSPECTED DAILY: Yes [X] No [ ]
ARE THERE ANY VISIBLE DENTS, SCRAPES, CORROSIONS ON TANK: Yes [ ] No [X]
IF YES, STATE EXACT LOCATION _____

DOES THE TANK HAVE ANY CONTAINMENTS TO CATCH LEAKS OR SPILLAGE: Yes [X] No [ ]
DISTANCE TO NEAREST TANK/NO 61"/93 CONTAINMENT WALL (Approx.) 19' +
PROPERTY LINE (Approx.) >50'
LEAK TEST RESULTS None CORROSION PROTECTION MEASURES Paint

DOES THE TANK APPEAR TO BE STRUCTURALLY SOUND & IN GOOD CONDITION: Yes [X] No [ ]
REFERENCE DRAWING NO./Date: SK Dwg 88-64200-151, 1-2-85 Rev. 0 12-1-88
CONCLUSIONS - IS THIS TANK FIT FOR USE: Yes [X] No [ ]

REMARKS: _____

Wang Engineering

TANK INSPECTION/DESIGN FORM

FACILITY NAME AND LOCATION SK Hescom on R.C. DATE 3/15/89 BY [illegible]
TANK NO./FARM 87/2 TANK HT/LENGTH: 32'6"/24'6" DIA: 10'6" OD
TYPE OF TANK: Vertical [X] Horizontal [ ] A/G [X] U/G [ ]
CAPACITY: 15,000 gal. MATERIAL STORED/CHARACTERISTICS: Chlorinated Solvents / Tox

TOP HEAD: Dished [X] Cone [ ] Flat [ ] Open Top [ ]
BTM HEAD: Dished [ ] Cone [X] Flat [ ]
TYPE OF SUPPORT: Skirt [X] Legs [ ] Saddles [ ] Slab [ ]

SKIRT HT. 8'0" SKIRT THK: 5/16" SHAPE/SIZE/HT OF LEG SUPPORT: _____

TYPE AND CONDITIONS OF FOUNDATION SUPPORT: Reinforced Concrete Slab, with occasionally hair line cracks in the contain

MATERIAL OF TANK CONSTRUCTION: Stainless Steel T-304 [ ] Carbon Steel [X]
TANK THICKNESS (DWG) SHELL: 5/16" ROOF PLATE: 1/4" BTM PLATE: 5/16"
(FIELD MEAS.): SHELL: 0.31 (min) ROOF PLATE: 0.249" BTM PLATE: 0.311 (Cone) +
Certified Equipment Mfg. Co. DWG No. 5260, 1-2-85
YEAR BUILT OR ESTIMATED AGE: May 86 MANUFACTURER'S NAME: Paul Mueller Co. Dwg No. PC04: 1-17-86, Rev. E, 4-23-86
DESIGN STANDARDS: UL 142 and NACE RP-01-78
IS THIS CLASSIFIED AS A NEW TANK? Yes [ ] No [X]

INFORMATION OF NAME PLATE ATTACHED TO THE TANK: None
LEVEL INDICATOR: Yes [X] No [ ] HIGH LEVEL ALARMS: Yes [X] No [ ]
TANK CONNECTIONS: Flanged [X] Screwed [ ]

TANK VENT SIZE: Open Vent _____ Closed Vent 3" Morrison Emergency Vent 24" M/HC
IS THE TANK INSULATED: Yes [X] No [ ] TANK PAINTED: Yes [X] No [ ]
PIPING: FROM THE TANK TO PROCESS UNIT: A/G X U/G _____
TYPE OF CONNECTIONS: Flanged [ ] Welded [X] Screwed [ ]
All Insulated
CONDITIONS OF CONNECTIONS, SEAMS, WELDS: Good on tank, not observable on piping
CAN THE PIPING, CONNECTION & SEAMS BE VISUALLY INSPECTED DAILY: Yes [X] No [ ]
ARE THERE ANY VISIBLE DENTS, SCRAPES, CORROSIONS ON TANK: Yes [ ] No [X]
IF YES, STATE EXACT LOCATION _____

DOES THE TANK HAVE ANY CONTAINMENTS TO CATCH LEAKS OR SPILLAGE: Yes [X] No [ ]
DISTANCE TO NEAREST TANK/NO 61"/92 CONTAINMENT WALL (Approx.) 19'
PROPERTY LINE (Approx.) >50'
LEAK TEST RESULTS None CORROSION PROTECTION MEASURES Paint

DOES THE TANK APPEAR TO BE STRUCTURALLY SOUND & IN GOOD CONDITION: Yes [X] No [ ]
REFERENCE DRAWING NO./Date: SK Dwg 88-64200-151, 1-2-85, Rev. 0 12-1-88
CONCLUSIONS - IS THIS TANK FIT FOR USE: Yes [X] No [ ]

REMARKS: _____

Wang Engineering

TANK INSPECTION/DESIGN FORM

FACILITY NAME AND LOCATION SK-Hercon on R.C. DATE 3/15/89 BY JLU
TANK NO./FARM 88/2 TANK HT/LENGTH: 32'6"/24'6" DIA: 10'6" OD
TYPE OF TANK: Vertical [X] Horizontal [ ] A/G [X] U/G [ ]
CAPACITY: 15,000 gal. MATERIAL STORED/CHARACTERISTICS: Chlorinated Solvents/Tc

TOP HEAD: Dished [X] Cone [ ] Flat [ ] Open Top [ ]
BTM HEAD: Dished [ ] Cone [X] Flat [ ]
TYPE OF SUPPORT: Skirt [X] Legs [ ] Saddles [ ] Slab [ ]

SKIRT HT. 8'0" SKIRT THK: 5/16" SHAPE/SIZE/HT OF LEG SUPPORT: _____

TYPE AND CONDITIONS OF FOUNDATION SUPPORT: Reinforced Concrete Slab, with occasionally hair line cracks in the center

MATERIAL OF TANK CONSTRUCTION: Stainless Steel T-304 [ ] Carbon Steel [X]
TANK THICKNESS (DWG) SHELL: 5/16" ROOF PLATE: 1/4" BTM PLATE: 5/16"
(FIELD MEAS.): SHELL: 0.308 (Min.) ROOF PLATE: 0.245 BTM PLATE: 0.317 (Core)

YEAR BUILT OR ESTIMATED AGE: May 86 MANUFACTURER'S NAME: Certified Equipment & Mfg. Co. DWG No. 5260, 1-2-85; Paul Mueller Co. Dwg No. PC04 1-17-86, Rev. E, 4-23-8
DESIGN STANDARDS: UL 142 and NACE RP-01-78
IS THIS CLASSIFIED AS A NEW TANK? Yes [ ] No [X]

INFORMATION OF NAME PLATE ATTACHED TO THE TANK: None
LEVEL INDICATOR: Yes [X] No [ ] HIGH LEVEL ALARMS: Yes [X] No [ ]
TANK CONNECTIONS: Flanged [X] Screwed [ ]

TANK VENT SIZE: Open Vent _____ Closed Vent 3" Morrison Emergency Vent 24" M/H C
IS THE TANK INSULATED: Yes [X] No [ ] TANK PAINTED: Yes [X] No [ ]
PIPING: FROM THE TANK TO PROCESS UNIT: A/G X U/G _____
TYPE OF CONNECTIONS: Flanged [ ] Welded [X] Screwed [ ]
All Insulated

CONDITIONS OF CONNECTIONS, SEAMS, WELDS: Good on tank, not observable on piping
CAN THE PIPING, CONNECTION & SEAMS BE VISUALLY INSPECTED DAILY: Yes [X] No [ ]
ARE THERE ANY VISIBLE DENTS, SCRAPES, CORROSIONS ON TANK: Yes [ ] No [X]
IF YES, STATE EXACT LOCATION _____

DOES THE TANK HAVE ANY CONTAINMENTS TO CATCH LEAKS OR SPILLAGE: Yes [X] No [ ]
DISTANCE TO NEAREST TANK/NO 61"/93 CONTAINMENT WALL (Approx.) 19'
PROPERTY LINE (Approx.) >50'
LEAK TEST RESULTS None CORROSION PROTECTION MEASURES Paint

DOES THE TANK APPEAR TO BE STRUCTURALLY SOUND & IN GOOD CONDITION: Yes [X] No [ ]
REFERENCE DRAWING NO./Date: SK Dwg 88-64200-151, 1-2-85, Rev. 0 12-4-88
CONCLUSIONS - IS THIS TANK FIT FOR USE: Yes [X] No [ ]

REMARKS: _____

Wang Engineering

TANK INSPECTION/DESIGN FORM

FACILITY NAME AND LOCATION SK Hercon on R.C. DATE 3/15/89 BY [illegible]
TANK NO./FARM 91/2 TANK HT/LENGTH: 32'6"/24'6" DIA: 10'6" [illegible]
TYPE OF TANK: Vertical [X] Horizontal [ ] A/G [X] U/G [ ]
CAPACITY: 15,000 gal. MATERIAL STORED/CHARACTERISTICS: Chlorinated Solvents / Toxic

TOP HEAD: Dished [X] Cone [ ] Flat [ ] Open Top [ ]
BTM HEAD: Dished [ ] Cone [X] Flat [ ]
TYPE OF SUPPORT: Skirt [X] Legs [ ] Saddles [ ] Slab [ ]

SKIRT HT: 8'0" SKIRT THK: 5/16" SHAPE/SIZE/HT OF LEG SUPPORT: _____

TYPE AND CONDITIONS OF FOUNDATION SUPPORT: Reinforced Concrete Slab, with occasionally hair line cracks in the contain[illegible]

MATERIAL OF TANK CONSTRUCTION: Stainless Steel T-304 [ ] Carbon Steel [X]
TANK THICKNESS (DWG) SHELL: 5/16" ROOF PLATE: 1/4" BTM PLATE: 5/16"
(FIELD MEAS.): SHELL: 0.295 (Min) ROOF PLATE: 0.229" BTM PLATE: 0.314" (Cone) + Certified Equipment Mfg. Co. DWG No. 5260, 1-2-85

YEAR BUILT OR ESTIMATED AGE: May 86 MANUFACTURER'S NAME: Paul Mueller Co. Dwg No. PC04-[illegible] 1-17-86, Rev. E, 4-23-86
DESIGN STANDARDS: UL 142 and NACE RP-01-78
IS THIS CLASSIFIED AS A NEW TANK? Yes [ ] No [X]

INFORMATION OF NAME PLATE ATTACHED TO THE TANK: None
LEVEL INDICATOR: Yes [X] No [ ] HIGH LEVEL ALARMS: Yes [X] No [ ]
TANK CONNECTIONS: Flanged [X] Screwed [ ]

TANK VENT SIZE: Open Vent _____ Closed Vent 3" Morrison Emergency Vent 24" M/H Co.
IS THE TANK INSULATED: Yes [X] No [ ] TANK PAINTED: Yes [X] No [ ]
PIPING: FROM THE TANK TO PROCESS UNIT: A/G X U/G _____
TYPE OF CONNECTIONS: Flanged [ ] Welded [X] Screwed [ ]
All Insulated

CONDITIONS OF CONNECTIONS, SEAMS, WELDS: Good on tank, not observable on piping
CAN THE PIPING, CONNECTION & SEAMS BE VISUALLY INSPECTED DAILY: Yes [X] No [ ]
ARE THERE ANY VISIBLE DENTS, SCRAPES, CORROSIONS ON TANK: Yes [ ] No [X]
IF YES, STATE EXACT LOCATION _____

DOES THE TANK HAVE ANY CONTAINMENTS TO CATCH LEAKS OR SPILLAGE: Yes [X] No [ ]
DISTANCE TO NEAREST TANK/NO 61"/86 CONTAINMENT WALL (Approx.) 19'
PROPERTY LINE (Approx.) >50'
LEAK TEST RESULTS None CORROSION PROTECTION MEASURES Paint

DOES THE TANK APPEAR TO BE STRUCTURALLY SOUND & IN GOOD CONDITION: Yes [X] No [ ]
REFERENCE DRAWING NO./Date: SK DWG 88-64200-151, 1-2-85 Rev. 0 12-1-88
CONCLUSIONS - IS THIS TANK FIT FOR USE: Yes [X] No [ ]

REMARKS: _____

APPENDIX 3

Existing Tank Nos.

203 through 209

in

Tank Farm No. 4

Wang Engineering, Inc.

SAFETY-KLEEN CORP
HEBRON OH

TANK EVALUATION FORM

K NO./FARM: 203-205, 209/4 DATE: 3/23/89 BY: JW

IS THIS AN EXISTING [X] OR A NEW TANK [ ]

SUFFICIENT STRUCTURAL STRENGTH:

BY MANUFACTURER DATA OR DESIGN STANDARDS: UL-142 and NACE RP-01-78

BY CALCULATION:

1. Stress at the bottom head joints for tanks

$$S = \frac{a\,M}{\pi R^2 T} + \frac{W}{\pi D T}$$

a - Conversion factor (12 in./foot)
M - wind moment at bottom weld joint, in pound-feet.
W - weight of full tank in pounds (steel wt. and content) Content Sp.gr. =1.3
D - tank diameter in inches
R - tank radius in inches
T - tank thickness in inches (Min. meas'd on all similar tanks)
Allowable stress: 14662 psi for SS
10795 psi for CS

$$M = b\,D H^2$$

b - 16.5 psi, for a wind velocity of 100 mph
D - tank diameter in feet
H - tank height in ft (incl. skirt)

If the calculated stress is less than or equal to the allowable stress, the tank thickness is satisfactory

S - 2533 psi

2. If the ratio of the tank height to tank diameter is more than 1.5, the tank support should be anchored.

CONCLUSION: Stress < Allowable Stress [X] Stress > Allowable Stress [ ]

COMPATIBILITY WITH THE WASTE: Yes [X] No [ ]

CORROSION RATE: 0.022" Inches Per Year (Max., based on one lowest measurement tank on all similar tanks.)

CORROSION PROTECTION MEASURE: Adequate [X] Not Adequate [ ]

STRUCTURAL SUPPORT: Adequate [X] Not Adequate [ ]

FOUNDATION SUPPORT: Adequate [X] Not Adequate [ ]

CONDITIONS OF SEAMS OR WELDS: Good [X] Defective [ ] If defective, describe:

CONNECTIONS: In Good Condition [X] Not in Good Condition [ ]

PRESSURE CONTROL: In Good Condition [X] Not in Good Condition [ ]

ANY PUNCTURES OR DENTS: Yes [ ] No [X]

SCRAPES ON TANK OR ON PROTECTIVE COATINGS: Yes [ ] No [X]

CRACKS Yes [ ] No [X]

CORROSION Yes [ ] No [X]

OTHER STRUCTURAL DAMAGES Yes [ ] No [X]

CONCLUSIONS - IS THIS TANK FIT FOR USE: Yes [X] No [ ] If no, explain:

SIGNED [signature]

Wang Engineering

TANK INSPECTION/DESIGN FORM

FACILITY NAME AND LOCATION SK Hergon OH R.C. DATE 3/15/89 BY J.U
TANK NO./FARM 203/4 TANK HT/LENGTH: 32'6"/24'6" DIA: 10'6" OD
TYPE OF TANK: Vertical [X] Horizontal [ ] A/G [X] U/G [ ]
CAPACITY: 15,000 gal. MATERIAL STORED/CHARACTERISTICS: Chlorinated Solvents / To

TOP HEAD: Dished [X] Cone [ ] Flat [ ] Open Top [ ]
BTM HEAD: Dished [ ] Cone [X] Flat [ ]
TYPE OF SUPPORT: Skirt [X] Legs [ ] Saddles [ ] Slab [ ]

SKIRT HT. 8'0" SKIRT THK: 5/16" SHAPE/SIZE/HT OF LEG SUPPORT:

TYPE AND CONDITIONS OF FOUNDATION SUPPORT: Reinforced Concrete Slab, with some small cracks in the conta

MATERIAL OF TANK CONSTRUCTION: Stainless Steel T-304 [ ] Carbon Steel [X]
TANK THICKNESS (DWG) SHELL: 5/16" ROOF PLATE: 1/4" BTM PLATE: 5/16"
(FIELD MEAS.): SHELL: 0.321 (Min) ROOF PLATE: 0.274" BTM PLATE: 0.328" (cone)

YEAR BUILT OR ESTIMATED AGE: 1984 MANUFACTURER'S NAME:
DESIGN STANDARDS: UL 142 and NACE RP-01-78
IS THIS CLASSIFIED AS A NEW TANK? Yes [ ] No [X]

INFORMATION OF NAME PLATE ATTACHED TO THE TANK: None
LEVEL INDICATOR: Yes [X] No [ ] HIGH LEVEL ALARMS: Yes [X] No [ ]
TANK CONNECTIONS: Flanged [X] Screwed [ ]

TANK VENT SIZE: Open Vent Closed Vent 3" Morrison Emergency Vent 24" M/H C
IS THE TANK INSULATED: Yes [X] No [ ] TANK PAINTED: Yes [X] No [ ]
PIPING: FROM THE TANK TO PROCESS UNIT: A/G X U/G
TYPE OF CONNECTIONS: Flanged [ ] Welded [X] Screwed [ ]
All Insulated

CONDITIONS OF CONNECTIONS, SEAMS, WELDS: Good on tank, not observable on piping
CAN THE PIPING, CONNECTION & SEAMS BE VISUALLY INSPECTED DAILY: Yes [X] No [ ]
ARE THERE ANY VISIBLE DENTS, SCRAPES, CORROSIONS ON TANK: Yes [ ] No [X]
IF YES, STATE EXACT LOCATION

DOES THE TANK HAVE ANY CONTAINMENTS TO CATCH LEAKS OR SPILLAGE: Yes [X] No [ ]
DISTANCE TO NEAREST TANK/NO 54"/209 CONTAINMENT WALL (Approx.) 32"
PROPERTY LINE (Approx.) ~50'
LEAK TEST RESULTS None CORROSION PROTECTION MEASURES Paint

DOES THE TANK APPEAR TO BE STRUCTURALLY SOUND & IN GOOD CONDITION: Yes [X] No [ ]
REFERENCE DRAWING NO./Date: SK DWG 88-64200-151, 1-2-85 Rev. 0 12-1-88
CONCLUSIONS - IS THIS TANK FIT FOR USE: Yes [X] No [ ]

REMARKS: Old Tank No. 154

Wang Engineering

TANK INSPECTION/DESIGN FORM

FACILITY NAME AND LOCATION SK Hergan OH R.C. DATE 3/15/89 BY [illegible]
TANK NO./FARM 204/4 TANK HT/LENGTH: 32'6"/24'6" DIA: 10'6" OD
TYPE OF TANK: Vertical [X] Horizontal [ ] A/G [X] U/G [ ]
CAPACITY: 15,000 gal. MATERIAL STORED/CHARACTERISTICS: Chlorinated Solvents / Toxi

TOP HEAD: Dished [X] Cone [ ] Flat [ ] Open Top [ ]
BTM HEAD: Dished [ ] Cone [X] Flat [ ]
TYPE OF SUPPORT: Skirt [X] Legs [ ] Saddles [ ] Slab [ ]

SKIRT HT. 8'0" SKIRT THK: 5/16" SHAPE/SIZE/HT OF LEG SUPPORT: _____

TYPE AND CONDITIONS OF FOUNDATION SUPPORT: Reinforced Concrete Slab, with some small cracks in the contain

MATERIAL OF TANK CONSTRUCTION: Stainless Steel T-304 [ ] Carbon Steel [X]
TANK THICKNESS (DWG) SHELL: 5/16" ROOF PLATE: 1/4" BTM PLATE: 5/16"
(FIELD MEAS.): SHELL: 0.313" (Min.) ROOF PLATE: 0.247" BTM PLATE: 0.403" (Cone)

YEAR BUILT OR ESTIMATED AGE: 1984 MANUFACTURER'S NAME: _____
DESIGN STANDARDS: UL 142 and NACE RP-01-78
IS THIS CLASSIFIED AS A NEW TANK? Yes [ ] No [X]

INFORMATION OF NAME PLATE ATTACHED TO THE TANK: None
LEVEL INDICATOR: Yes [X] No [ ] HIGH LEVEL ALARMS: Yes [X] No [ ]
TANK CONNECTIONS: Flanged [X] Screwed [ ]

TANK VENT SIZE: Open Vent _____ Closed Vent 3" Morrison Emergency Vent 24" M/H Co
IS THE TANK INSULATED: Yes [X] No [ ] TANK PAINTED: Yes [X] No [ ]
PIPING: FROM THE TANK TO PROCESS UNIT: A/G X U/G _____
TYPE OF CONNECTIONS: Flanged [ ] Welded [X] Screwed [ ]
All Insulated

CONDITIONS OF CONNECTIONS, SEAMS, WELDS: Good on tank, not observable on piping
CAN THE PIPING, CONNECTION & SEAMS BE VISUALLY INSPECTED DAILY: Yes [X] No [ ]
ARE THERE ANY VISIBLE DENTS, SCRAPES, CORROSIONS ON TANK: Yes [ ] No [X]
IF YES, STATE EXACT LOCATION _____

DOES THE TANK HAVE ANY CONTAINMENTS TO CATCH LEAKS OR SPILLAGE: Yes [X] No [ ]
DISTANCE TO NEAREST TANK/NO 54"/205 CONTAINMENT WALL (Approx.) 32"
PROPERTY LINE (Approx.) ~50'
LEAK TEST RESULTS None CORROSION PROTECTION MEASURES Paint

DOES THE TANK APPEAR TO BE STRUCTURALLY SOUND & IN GOOD CONDITION: Yes [X] No [ ]
REFERENCE DRAWING NO./Date: SK Dwg 88-64200-151, 1-2-85, Rev. 0 12-1-88
CONCLUSIONS - IS THIS TANK FIT FOR USE: Yes [X] No [ ]

REMARKS: _____

Wang Engineering

TANK INSPECTION/DESIGN FORM

FACILITY NAME AND LOCATION SK Hercon on R.C. DATE 3/15/89 BY JW
TANK NO./FARM 205/4 TANK HT/LENGTH: 32'6"/24'6" DIA: 10'6" OD
TYPE OF TANK: Vertical [X] Horizontal [ ] A/G [X] U/G [ ]
CAPACITY: 15,000 gal. MATERIAL STORED/CHARACTERISTICS: Chlorinated Solvents / Toxic

TOP HEAD: Dished [X] Cone [ ] Flat [ ] Open Top [ ]
BTM HEAD: Dished [ ] Cone [X] Flat [ ]
TYPE OF SUPPORT: Skirt [X] Legs [ ] Saddles [ ] Slab [ ]

SKIRT HT. 8'0" SKIRT THK: 5/16" SHAPE/SIZE/HT OF LEG SUPPORT: _____

TYPE AND CONDITIONS OF FOUNDATION SUPPORT: Reinforced Concrete Slab, with some small cracks - the contain...

MATERIAL OF TANK CONSTRUCTION: Stainless Steel T-304 [ ] Carbon Steel [X]
TANK THICKNESS (DWG) SHELL: 5/16" ROOF PLATE: 1/4" BTM PLATE: 5/16"
(FIELD MEAS.): SHELL: 0.32" (Min.) ROOF PLATE: 0.255 BTM PLATE: 0.384" (Cone)

YEAR BUILT OR ESTIMATED AGE: 1984 MANUFACTURER'S NAME: _____
DESIGN STANDARDS: UL 142 and NACE RP-01-78
IS THIS CLASSIFIED AS A NEW TANK? Yes [ ] No [X]

INFORMATION OF NAME PLATE ATTACHED TO THE TANK: None
LEVEL INDICATOR: Yes [X] No [ ] HIGH LEVEL ALARMS: Yes [X] No [ ]
TANK CONNECTIONS: Flanged [X] Screwed [ ]

TANK VENT SIZE: Open Vent _____ Closed Vent 3" Morrison Emergency Vent 24" M/H Co.
IS THE TANK INSULATED: Yes [X] No [ ] TANK PAINTED: Yes [X] No [ ]
PIPING: FROM THE TANK TO PROCESS UNIT: A/G X U/G _____
TYPE OF CONNECTIONS: Flanged [ ] Welded [X] Screwed [ ]
All Insulated

CONDITIONS OF CONNECTIONS, SEAMS, WELDS: Good on tank, not observable on piping
CAN THE PIPING, CONNECTION & SEAMS BE VISUALLY INSPECTED DAILY: Yes [X] No [ ]
ARE THERE ANY VISIBLE DENTS, SCRAPES, CORROSIONS ON TANK: Yes [ ] No [X]
IF YES, STATE EXACT LOCATION _____

DOES THE TANK HAVE ANY CONTAINMENTS TO CATCH LEAKS OR SPILLAGE: Yes [X] No [ ]
DISTANCE TO NEAREST TANK/NO 54"/204 CONTAINMENT WALL (Approx.) 32"
PROPERTY LINE (Approx.) 50'
LEAK TEST RESULTS None CORROSION PROTECTION MEASURES Paint

DOES THE TANK APPEAR TO BE STRUCTURALLY SOUND & IN GOOD CONDITION: Yes [X] No [ ]
REFERENCE DRAWING NO./Date: SK DWG 88-64200-151, 1-2-85 Rev. 0 12-1-88
CONCLUSIONS - IS THIS TANK FIT FOR USE: Yes [X] No [ ]

REMARKS: _____

Wang Engineering

TANK INSPECTION/DESIGN FORM

FACILITY NAME AND LOCATION SK-Hercon OH R.C. DATE 3/15/89 BY -JW
TANK NO./FARM 209/4 TANK HT/LENGTH: 32'6"/24'6" DIA: 10'6" OD
TYPE OF TANK: Vertical [X] Horizontal [ ] A/G [X] U/G [ ]
CAPACITY: 15,000 gal. MATERIAL STORED/CHARACTERISTICS: Chlorinated Solvents / Tc

TOP HEAD: Dished [X] Cone [ ] Flat [ ] Open Top [ ]
BTM HEAD: Dished [ ] Cone [X] Flat [ ]
TYPE OF SUPPORT: Skirt [X] Legs [ ] Saddles [ ] Slab [ ]

SKIRT HT. 8'0" SKIRT THK: 5/16" SHAPE/SIZE/HT OF LEG SUPPORT: _____

TYPE AND CONDITIONS OF FOUNDATION SUPPORT: Reinforced Concrete Slab, with some small cracks in the center

MATERIAL OF TANK CONSTRUCTION: Stainless Steel T-304 [ ] Carbon Steel [X]
TANK THICKNESS (DWG) SHELL: 5/16" ROOF PLATE: 1/4" BTM PLATE: 5/16"
(FIELD MEAS.): SHELL: 0.324 (Min.) ROOF PLATE: 0.262" BTM PLATE: 0.327" (Cone)

YEAR BUILT OR ESTIMATED AGE: 1984 MANUFACTURER'S NAME: _____
DESIGN STANDARDS: UL 142 and NACE RP-01-7X
IS THIS CLASSIFIED AS A NEW TANK? Yes [ ] No [X]

INFORMATION OF NAME PLATE ATTACHED TO THE TANK: None
LEVEL INDICATOR: Yes [X] No [ ] HIGH LEVEL ALARMS: Yes [X] No [ ]
TANK CONNECTIONS: Flanged [X] Screwed [ ]

TANK VENT SIZE: Open Vent _____ Closed Vent 3" Morrison Emergency Vent 24" M/HC
IS THE TANK INSULATED: Yes [X] No [ ] TANK PAINTED: Yes [X] No [ ]
PIPING: FROM THE TANK TO PROCESS UNIT: A/G X U/G _____
TYPE OF CONNECTIONS: Flanged [ ] Welded [X] Screwed [ ]
All Insulated

CONDITIONS OF CONNECTIONS, SEAMS, WELDS: Good on tank, not observable on piping
CAN THE PIPING, CONNECTION & SEAMS BE VISUALLY INSPECTED DAILY: Yes [X] No [ ]
ARE THERE ANY VISIBLE DENTS, SCRAPES, CORROSIONS ON TANK: Yes [ ] No [X]
IF YES, STATE EXACT LOCATION _____

DOES THE TANK HAVE ANY CONTAINMENTS TO CATCH LEAKS OR SPILLAGE: Yes [X] No [ ]
DISTANCE TO NEAREST TANK/NO 54"/203 CONTAINMENT WALL (Approx.) 32"
PROPERTY LINE (Approx.) ~50'
LEAK TEST RESULTS None CORROSION PROTECTION MEASURES Paint

DOES THE TANK APPEAR TO BE STRUCTURALLY SOUND & IN GOOD CONDITION: Yes [X] No [ ]
REFERENCE DRAWING NO./Date: SK DWG 88-64200-151, 1-2-85, Rev. 0 12-1-88
CONCLUSIONS - IS THIS TANK FIT FOR USE: Yes [X] No [ ]

REMARKS: _____

Wang Engineering, Inc.

SAFETY-KLEEN CORP
HEBRON OH

TANK EVALUATION FORM

K NO./FARM: 206,207/4 DATE: 3/23/89 BY: JW

S THIS AN EXISTING [X] OR A NEW TANK [ ]

SUFFICIENT STRUCTURAL STRENGTH:

BY MANUFACTURER DATA OR DESIGN STANDARDS: UL

BY CALCULATION:

1. Stress at the bottom head joints for tanks

$$S = \frac{a\,M}{\pi R^2 T} + \frac{W}{\pi D T}$$

a - Conversion factor (12 in./foot)
M - wind moment at bottom weld joint, in pound-feet.
W - weight of full tank in pounds (steel wt. and content) content sp.gr. = 1.3
D - tank diameter in inches
R - tank radius in inches
T - tank thickness in inches (Min. value measured
Allowable stress: 14662 psi for SS
10795 psi for CS

$$M = b\,D H^2$$

b - 16.5 psi, for a wind velocity of 100 mph
D - tank diameter in feet
H - tank height in ft (excl. skirt)

If the calculated stress is less than or equal to the allowable stress, the tank thickness is satisfactory

S - 4029 psi

2. If the ratio of the tank height to tank diameter is more than 1.5, the tank support should be anchored.

CONCLUSION: Stress < Allowable Stress [X] Stress > Allowable Stress [ ]
COMPATIBILITY WITH THE WASTE: Yes [X] No [ ]
CORROSION RATE: 0.0067 Inches Per Year
CORROSION PROTECTION MEASURE: Adequate [X] Not Adequate [ ]
STRUCTURAL SUPPORT: Adequate [X] Not Adequate [ ]
FOUNDATION SUPPORT: Adequate [X] Not Adequate [ ]
CONDITIONS OF SEAMS OR WELDS: Good [X] Defective [ ] If defective, describe:

CONNECTIONS: In Good Condition [X] Not in Good Condition [ ]
PRESSURE CONTROL: In Good Condition [X] Not in Good Condition [ ]
ANY PUNCTURES OR DENTS: Yes [ ] No [X]
SCRAPES ON TANK OR ON PROTECTIVE COATINGS: Yes [ ] No [X]
CRACKS Yes [ ] No [X]
CORROSION Yes [ ] No [X]
OTHER STRUCTURAL DAMAGES Yes [ ] No [X]

CLUSIONS - IS THIS TANK FIT FOR USE: Yes [X] No [ ] If no, explain:

SIGNED J. Wang

2
X

Wang Engineering

TANK INSPECTION/DESIGN FORM

FACILITY NAME AND LOCATION SK Hebron OH R.C shaft DATE 3/16/89 BY JW
TANK NO./FARM 206/4 TANK HT/LENGTH: 28'6"/28'0" DIA: 7'0"
TYPE OF TANK: Vertical [X] Horizontal [ ] A/G [X] U/G [ ]
CAPACITY: 8,000 gal. MATERIAL STORED/CHARACTERISTICS: Chlorinated Solvent/Toxic

TOP HEAD: Dished [X] Cone [ ] Flat [ ] Open Top [ ]
BTM HEAD: Dished [ ] Cone [ ] Flat [X]
TYPE OF SUPPORT: Skirt [ ] Legs [ ] Saddles [ ] Slab [X]

SKIRT HT._____ SKIRT THK:_____ SHAPE/SIZE/HT OF LEG SUPPORT:_____

TYPE AND CONDITIONS OF FOUNDATION SUPPORT: Concrete Slab, w/ some small cracks in the containment area

MATERIAL OF TANK CONSTRUCTION: Stainless Steel T-304 [ ] Carbon Steel [X]
TANK THICKNESS (DWG) SHELL: 3/16"-1/4" ROOF PLATE: 3/16" BTM PLATE: 1/4"
(FIELD MEAS.): SHELL: 0.154" (Min.) ROOF PLATE: 0.14 BTM PLATE:_____

YEAR BUILT OR ESTIMATED AGE: '84 MANUFACTURER'S NAME:_____
DESIGN STANDARDS: UL
IS THIS CLASSIFIED AS A NEW TANK? Yes [ ] No [X]

INFORMATION OF NAME PLATE ATTACHED TO THE TANK: UL Tag
LEVEL INDICATOR: Yes [X] No [ ] HIGH LEVEL ALARMS: Yes [X] No [ ]
TANK CONNECTIONS: Flanged [ ] Screwed [X]

TANK VENT SIZE: Open Vent _____ Closed Vent 3" Mpression Emergency Vent 24" Mfr
IS THE TANK INSULATED: Yes [ ] No [X] TANK PAINTED: Yes [X] No [ ]
PIPING: FROM THE TANK TO PROCESS UNIT: A/G X U/G_____
TYPE OF CONNECTIONS: Flanged [ ] Welded [X] Screwed [ ]

CONDITIONS OF CONNECTIONS, SEAMS, WELDS: Good on Tank
CAN THE PIPING, CONNECTION & SEAMS BE VISUALLY INSPECTED DAILY: Yes [X] No [ ]
ARE THERE ANY VISIBLE DENTS, SCRAPES, CORROSIONS ON TANK: Yes [ ] No [X]
IF YES, STATE EXACT LOCATION_____

DOES THE TANK HAVE ANY CONTAINMENTS TO CATCH LEAKS OR SPILLAGE: Yes [X] No [ ]
DISTANCE TO NEAREST TANK/NO 36"/207 CONTAINMENT WALL (Approx.) 45"
PROPERTY LINE (Approx.) >50' (w/ Minor hairline cracks)
LEAK TEST RESULTS None CORROSION PROTECTION MEASURES Paint

DOES THE TANK APPEAR TO BE STRUCTURALLY SOUND & IN GOOD CONDITION: Yes [X] No [ ]
REFERENCE DRAWING NO./Date: SK Dwg No. 88-61200-154, 6-16-82
CONCLUSIONS - IS THIS TANK FIT FOR USE: Yes [X] No [ ]

REMARKS:_____

2
X

Wang Engineering

TANK INSPECTION/DESIGN FORM

FACILITY NAME AND LOCATION SK Hebron OH R.C (shaft) DATE 3/16/89 BY JW
TANK NO./FARM 207/4 TANK HT/LENGTH: 28'6"/28'0" DIA: 7'0"
TYPE OF TANK: Vertical [X] Horizontal [ ] A/G [X] U/G [ ]
CAPACITY: 8,000 gal. MATERIAL STORED/CHARACTERISTICS: Chlorinated Solvent/Toxic

TOP HEAD: Dished [X] Cone [ ] Flat [ ] Open Top [ ]
BTM HEAD: Dished [ ] Cone [ ] Flat [X]
TYPE OF SUPPORT: Skirt [ ] Legs [ ] Saddles [ ] Slab [X]

SKIRT HT._____ SKIRT THK:_____ SHAPE/SIZE/HT OF LEG SUPPORT:_____

TYPE AND CONDITIONS OF FOUNDATION SUPPORT: Concrete Slab, w/ some small cracks in the containment area

MATERIAL OF TANK CONSTRUCTION: Stainless Steel T-304 [ ] Carbon Steel [X]
TANK THICKNESS (DWG) SHELL: 3/16"-1/4" ROOF PLATE: 3/16" BTM PLATE: 1/4"
(FIELD MEAS.): SHELL: 0.142" (Min.) ROOF PLATE: 0.161 BTM PLATE:_____

YEAR BUILT OR ESTIMATED AGE: '84 MANUFACTURER'S NAME:_____
DESIGN STANDARDS: UL
IS THIS CLASSIFIED AS A NEW TANK? Yes [ ] No [X]

INFORMATION OF NAME PLATE ATTACHED TO THE TANK: UL Tag
LEVEL INDICATOR: Yes [X] No [ ] HIGH LEVEL ALARMS: Yes [X] No [ ]
TANK CONNECTIONS: Flanged [ ] Screwed [X]

TANK VENT SIZE: Open Vent_____ Closed Vent 3" Mamson Emergency Vent 24" H/H
IS THE TANK INSULATED: Yes [ ] No [X] TANK PAINTED: Yes [X] No [ ]
PIPING: FROM THE TANK TO PROCESS UNIT: A/G X U/G_____
TYPE OF CONNECTIONS: Flanged [ ] Welded [X] Screwed [ ]

CONDITIONS OF CONNECTIONS, SEAMS, WELDS: Good on Tank
CAN THE PIPING, CONNECTION & SEAMS BE VISUALLY INSPECTED DAILY: Yes [X] No [ ]
ARE THERE ANY VISIBLE DENTS, SCRAPES, CORROSIONS ON TANK: Yes [ ] No [X]
IF YES, STATE EXACT LOCATION_____

DOES THE TANK HAVE ANY CONTAINMENTS TO CATCH LEAKS OR SPILLAGE: Yes [X] No [ ]
DISTANCE TO NEAREST TANK/NO 36"/206 CONTAINMENT WALL (Approx.) 48"
PROPERTY LINE (Approx.) >50' (w/ Minor hairline cracks)
LEAK TEST RESULTS None CORROSION PROTECTION MEASURES Paint

DOES THE TANK APPEAR TO BE STRUCTURALLY SOUND & IN GOOD CONDITION: Yes [X] No [ ]
REFERENCE DRAWING NO./Date: SK Dwg No. 88-61200-156, 6-16-82
CONCLUSIONS - IS THIS TANK FIT FOR USE: Yes [X] No [ ]

REMARKS:_____

Wang Engineering, Inc.

SAFETY-KLEEN CORP
HEBRON OH

TANK EVALUATION FORM

K NO./FARM: 208/4 DATE: 3/23/89 BY: JW

IS THIS AN EXISTING [X] OR A NEW TANK [ ]

SUFFICIENT STRUCTURAL STRENGTH:

BY MANUFACTURER DATA OR DESIGN STANDARDS:

BY CALCULATION:

1. Stress at the bottom head joints for tanks

$$S = \frac{a\,M}{\pi R^2 T} + \frac{W}{\pi D T}$$

a - Conversion factor (12 in./foot)
M - wind moment at bottom weld joint, in pound-feet.
W - weight of full tank in pounds (steel wt. and content) Content sp gr. =1.3
D - tank diameter in inches
R - tank radius in inches
T - tank thickness in inches
Allowable stress: 14662 psi for SS
10795 psi for CS

$$M = b\,D H^2$$

b - 16.5 psi, for a wind velocity of 100 mph
D - tank diameter in feet
H - tank height in ft (excl. skirt)

If the calculated stress is less than or equal to the allowable stress, the tank thickness is satisfactory

S - 2418 psi

2. If the ratio of the tank height to tank diameter is more than 1.5, the tank support should be anchored.

CONCLUSION: Stress < Allowable Stress [X] Stress > Allowable Stress [ ]

COMPATIBILITY WITH THE WASTE: Yes [X] No [ ]

CORROSION RATE: 0.0012 Inches Per Year (based on min. thickness measured on similar tanks)

CORROSION PROTECTION MEASURE: Adequate [X] Not Adequate [ ]

STRUCTURAL SUPPORT: Adequate [X] Not Adequate [ ]

FOUNDATION SUPPORT: Adequate [X] Not Adequate [ ]

CONDITIONS OF SEAMS OR WELDS: Good [X] Defective [ ] If defective, describe:

CONNECTIONS: In Good Condition [X] Not in Good Condition [ ]

PRESSURE CONTROL: In Good Condition [X] Not in Good Condition [ ]

ANY PUNCTURES OR DENTS: Yes [ ] No [X]

SCRAPES ON TANK OR ON PROTECTIVE COATINGS: Yes [ ] No [X]

CRACKS Yes [ ] No [X]

CORROSION Yes [ ] No [X]

OTHER STRUCTURAL DAMAGES Yes [ ] No [X]

CONCLUSIONS - IS THIS TANK FIT FOR USE: Yes [X] No [ ] If no, explain:

SIGNED J. Wang

1
Δ

TANK INSPECTION/DESIGN FORM

FACILITY NAME AND LOCATION SK Helicopter Shop OH R.C DATE 3/16/89 BY JW
TANK NO./FARM 208/4 TANK HT/LENGTH: 28'4"/28'0" DIA: 8'0"
TYPE OF TANK: Vertical [X] Horizontal [ ] A/G [X] U/G [ ]
CAPACITY: 10,500 gal. MATERIAL STORED/CHARACTERISTICS: Chlorinated Solvents / Tox.

TOP HEAD: Dished [X] Cone [ ] Flat [ ] Open Top [ ]
BTM HEAD: Dished [ ] Cone [ ] Flat [X]
TYPE OF SUPPORT: Skirt [ ] Legs [ ] Saddles [ ] Slab [X]

SKIRT HT._____ SKIRT THK:_____ SHAPE/SIZE/HT OF LEG SUPPORT:_____

TYPE AND CONDITIONS OF FOUNDATION SUPPORT: Concrete Slab w/ small cracks in the containment area

MATERIAL OF TANK CONSTRUCTION: Stainless Steel T-304 [ ] Carbon Steel [X]
TANK THICKNESS (DWG) SHELL: 1/4" ROOF PLATE: 1/4" BTM PLATE: 1/4"
(FIELD MEAS.): SHELL: 0.252" (11 Gal.) ROOF PLATE: 0.267" BTM PLATE:_____

YEAR BUILT OR ESTIMATED AGE: 1984 MANUFACTURER'S NAME:_____
DESIGN STANDARDS: UL-142 and NACE RP-01-78
IS THIS CLASSIFIED AS A NEW TANK? Yes [ ] No [X]

INFORMATION OF NAME PLATE ATTACHED TO THE TANK: UL Tag
LEVEL INDICATOR: Yes [X] No [ ] HIGH LEVEL ALARMS: Yes [X] No [ ]
TANK CONNECTIONS: Flanged [X] Screwed [ ]

TANK VENT SIZE: Open Vent_____ Closed Vent 3" Minimum Emergency Vent 24" H/H Code
IS THE TANK INSULATED: Yes [ ] No [X] TANK PAINTED: Yes [X] No [ ]
PIPING: FROM THE TANK TO PROCESS UNIT: A/G X U/G_____
TYPE OF CONNECTIONS: Flanged [ ] Welded [ ] Screwed [ ]

CONDITIONS OF CONNECTIONS, SEAMS, WELDS: Good on Tank
CAN THE PIPING, CONNECTION & SEAMS BE VISUALLY INSPECTED DAILY: Yes [X] No [ ]
ARE THERE ANY VISIBLE DENTS, SCRAPES, CORROSIONS ON TANK: Yes [ ] No [X]
IF YES, STATE EXACT LOCATION_____

DOES THE TANK HAVE ANY CONTAINMENTS TO CATCH LEAKS OR SPILLAGE: Yes [X] No [ ]
DISTANCE TO NEAREST TANK/NO 54"/207 CONTAINMENT WALL (Approx.) 47"
PROPERTY LINE (Approx.) >50'
LEAK TEST RESULTS None CORROSION PROTECTION MEASURES Paint

DOES THE TANK APPEAR TO BE STRUCTURALLY SOUND & IN GOOD CONDITION: Yes [X] No [ ]
REFERENCE DRAWING NO./Date: SK Dwg. No. 88-64200-157 4-6-84, Rev. 6-15-84.
CONCLUSIONS - IS THIS TANK FIT FOR USE: Yes [X] No [ ]

REMARKS:_____

APPENDIX 4

Existing Tank Nos.

96 and 97

in

Tank Farm No. 6

Wang Engineering, Inc.

SAFETY-KLEEN CORP
HEBRON OH

TANK EVALUATION FORM

TANK NO./FARM: 96/6 DATE: 4/5/89 BY: JW

IS THIS AN EXISTING [X] OR A NEW TANK [ ]

SUFFICIENT STRUCTURAL STRENGTH:

BY MANUFACTURER DATA OR DESIGN STANDARDS: Design Std's not Known

BY CALCULATION:

1. Stress at the bottom head joints for tanks

$$S = \frac{aM}{\pi R^2 T} + \frac{W}{\pi D T}$$

a - Conversion factor (12 in./foot)
M - wind moment at bottom weld joint, in pound-feet.
W - weight of full tank in pounds (steel wt. and content)
D - tank diameter in inches
R - tank radius in inches
T - tank thickness in inches
Allowable stress: 14662 psi for SS
10795 psi for CS

$$M = b D H^2$$

b - 16.5 psi, for a wind velocity of 100 mph
D - tank diameter in feet
H - tank height in ft (excl. skirt)

If the calculated stress is less than or equal to the allowable stress, the tank thickness is satisfactory

S - 2400 psi

2. If the ratio of the tank height to tank diameter is more than 1.5, the tank support should be anchored.

CONCLUSION: Stress < Allowable Stress [X] Stress > Allowable Stress [ ]

COMPATIBILITY WITH THE WASTE: Yes [X] No [ ]

CORROSION RATE: 0.004 Inches Per Year

CORROSION PROTECTION MEASURE: Adequate [X] Not Adequate [ ]

STRUCTURAL SUPPORT: Adequate [X] Not Adequate [ ]

FOUNDATION SUPPORT: Adequate [X] Not Adequate [ ]

CONDITIONS OF SEAMS OR WELDS: Good [X] Defective [ ] If defective, describe:

CONNECTIONS: In Good Condition [X] Not in Good Condition [ ]

PRESSURE CONTROL: In Good Condition [X] Not in Good Condition [ ]

ANY PUNCTURES OR DENTS: Yes [ ] No [X]

SCRAPES ON TANK OR ON PROTECTIVE COATINGS: Yes [ ] No [X]

CRACKS Yes [ ] No [X]

CORROSION Yes [ ] No [X]

OTHER STRUCTURAL DAMAGES Yes [ ] No [X]

CONCLUSIONS - IS THIS TANK FIT FOR USE: Yes [X] No [ ] If no, explain:

SIGNED J.W. Wang

Wang Engineering

TANK INSPECTION/DESIGN FORM

FACILITY NAME AND LOCATION SK Hebron off RC DATE 3/16/89 BY JW
TANK NO./FARM 96/6 TANK HT/LENGTH: 17' DIA: 11'
TYPE OF TANK: Vertical [X] Horizontal [ ] A/G [X] U/G [ ]
CAPACITY: 12,000 gal. MATERIAL STORED/CHARACTERISTICS: Chlorinated Solvents / Toxic

TOP HEAD: Dished [X] Cone [ ] Flat [ ] Open Top [ ]
BTM HEAD: Dished [ ] Cone [ ] Flat [X]
TYPE OF SUPPORT: Skirt [ ] Legs [ ] Saddles [ ] Slab [X]

SKIRT HT._____ SKIRT THK:_____ SHAPE/SIZE/HT OF LEG SUPPORT:_____

TYPE AND CONDITIONS OF FOUNDATION SUPPORT: Reinforced Concrete slab w/ occasional minor hairline cracks in the containment area

MATERIAL OF TANK CONSTRUCTION: Stainless Steel T-304 [ ] Carbon Steel [X]
TANK THICKNESS (DWG) SHELL: 3/16" ROOF PLATE: 0.179" BTM PLATE: 3/16" Per J. Dick
(FIELD MEAS.): SHELL: 0.165 (Min.) ROOF PLATE: 0.161 BTM PLATE: 0.237 (Min)

YEAR BUILT OR ESTIMATED AGE: 1983 MANUFACTURER'S NAME:_____
DESIGN STANDARDS:_____
IS THIS CLASSIFIED AS A NEW TANK? Yes [ ] No [X]

INFORMATION OF NAME PLATE ATTACHED TO THE TANK: None
LEVEL INDICATOR: Yes [X] No [ ] HIGH LEVEL ALARMS: Yes [X] No [ ]
TANK CONNECTIONS: Flanged [X] Screwed [X]

TANK VENT SIZE: Open Vent _____ Closed Vent 3" Morrison Emergency Vent 24" M/H
IS THE TANK INSULATED: Yes [ ] No [X] TANK PAINTED: Yes [X] No [ ]
PIPING: FROM THE TANK TO PROCESS UNIT: A/G X U/G_____
TYPE OF CONNECTIONS: Flanged [X] Welded [X] Screwed [ ]

CONDITIONS OF CONNECTIONS, SEAMS, WELDS: Good
CAN THE PIPING, CONNECTION & SEAMS BE VISUALLY INSPECTED DAILY: Yes [X] No [ ]
ARE THERE ANY VISIBLE DENTS, SCRAPES, CORROSIONS ON TANK: Yes [ ] No [X]
IF YES, STATE EXACT LOCATION_____

DOES THE TANK HAVE ANY CONTAINMENTS TO CATCH LEAKS OR SPILLAGE: Yes [X] No [ ]
DISTANCE TO NEAREST TANK/NO 38"/98 CONTAINMENT WALL (Approx.) 36"
PROPERTY LINE (Approx.) > 200'
LEAK TEST RESULTS None CORROSION PROTECTION MEASURES Paint

DOES THE TANK APPEAR TO BE STRUCTURALLY SOUND & IN GOOD CONDITION: Yes [X] No [ ]
REFERENCE DRAWING NO./Date: None
CONCLUSIONS - IS THIS TANK FIT FOR USE: Yes [X] No [ ]

REMARKS:_____

Wang Engineering, Inc.

SAFETY-KLEEN CORP
HEBRON OH

TANK EVALUATION FORM

TANK NO./FARM: 97/6 DATE: 4/4/89 BY: JW

IS THIS AN EXISTING [X] OR A NEW TANK [ ]

SUFFICIENT STRUCTURAL STRENGTH:

BY MANUFACTURER DATA OR DESIGN STANDARDS: Not known

BY CALCULATION:

1. Stress at the bottom head joints for tanks

$$S = \frac{a\,M}{\pi R^2 T} + \frac{W}{\pi D T}$$

a - Conversion factor (12 in./foot)
M - wind moment at bottom weld joint, in pound-feet.
W - weight of full tank in pounds (steel wt. and content) Content sp.gr. =1.3
D - tank diameter in inches
R - tank radius in inches
T - tank thickness in inches
Allowable stress: 14662 psi for SS
10795 psi for CS

$$M = b\,D H^2$$

b - 16.5 psi, for a wind velocity of 100 mph
D - tank diameter in feet
H - tank height in ft (excl. skirt)

If the calculated stress is less than or equal to the allowable stress, the tank thickness is satisfactory

S - 3490 psi

2. If the ratio of the tank height to tank diameter is more than 1.5, the tank support should be anchored.

CONCLUSION: Stress < Allowable Stress [X] Stress > Allowable Stress [ ]

COMPATIBILITY WITH THE WASTE: Yes [X] No [ ]

CORROSION RATE: 0.022 Inches Per Year (Max. calculated on tanks of similar materials + content

CORROSION PROTECTION MEASURE: Adequate [X] Not Adequate [ ]

STRUCTURAL SUPPORT: Adequate [X] Not Adequate [ ]

FOUNDATION SUPPORT: Adequate [X] Not Adequate [ ]

CONDITIONS OF SEAMS OR WELDS: Good [X] Defective [ ] If defective, describe:

CONNECTIONS: In Good Condition [X] Not in Good Condition [ ]

PRESSURE CONTROL: In Good Condition [X] Not in Good Condition [ ]

ANY PUNCTURES OR DENTS: Yes [ ] No [X]

SCRAPES ON TANK OR ON PROTECTIVE COATINGS: Yes [ ] No [X]

CRACKS Yes [ ] No [X]

CORROSION Yes [ ] No [X]

OTHER STRUCTURAL DAMAGES Yes [ ] No [X]

CONCLUSIONS - IS THIS TANK FIT FOR USE: Yes [X] No [ ] If no, explain:

SIGNED J. Wang

Wang Engineering

TANK INSPECTION/DESIGN FORM

FACILITY NAME AND LOCATION SK Hefner OH R.C. (shelf) DATE 3/16/89 BY JW
TANK NO./FARM 97/6 TANK HT/LENGTH: 24' DIA: 12'
TYPE OF TANK: Vertical [X] Horizontal [ ] A/G [X] U/G [ ]
CAPACITY: 20,000 gal. MATERIAL STORED/CHARACTERISTICS: Mineral Spirits/Ignitable Chlorinated Solvents/Toxic

TOP HEAD: Dished [X] Cone [ ] Flat [ ] Open Top [ ]
BTM HEAD: Dished [ ] Cone [ ] Flat [X]
TYPE OF SUPPORT: Skirt [ ] Legs [ ] Saddles [ ] Slab [X]

SKIRT HT._____ SKIRT THK:_____ SHAPE/SIZE/HT OF LEG SUPPORT:_____

TYPE AND CONDITIONS OF FOUNDATION SUPPORT: Reinforced Concrete Slab, w/ Minor hairline cracks

MATERIAL OF TANK CONSTRUCTION: Stainless Steel T-304 [ ] Carbon Steel [X]
TANK THICKNESS (DWG) SHELL:_____ ROOF PLATE:_____ BTM PLATE:_____
(FIELD MEAS.): SHELL: 0.177 (Min.) ROOF PLATE: 0.174 BTM PLATE:_____

YEAR BUILT OR ESTIMATED AGE: 1983 MANUFACTURER'S NAME: Modern Welding
DESIGN STANDARDS: Not Known
IS THIS CLASSIFIED AS A NEW TANK? Yes [ ] No [X]

INFORMATION OF NAME PLATE ATTACHED TO THE TANK: None
LEVEL INDICATOR: Yes [X] No [ ] HIGH LEVEL ALARMS: Yes [X] No [ ]
TANK CONNECTIONS: Flanged [X] Screwed [ ]

TANK VENT SIZE: Open Vent _____ Closed Vent 3" Manway Emergency Vent 24" N/H
IS THE TANK INSULATED: Yes [X] No [ ] TANK PAINTED: Yes [ ] No [ ] Not observed
PIPING: FROM THE TANK TO PROCESS UNIT: A/G X U/G_____
TYPE OF CONNECTIONS: Flanged [ ] Welded [X] Screwed [ ]

CONDITIONS OF CONNECTIONS, SEAMS, WELDS: Not observable on Tank, piping looked ge
CAN THE PIPING, CONNECTION & SEAMS BE VISUALLY INSPECTED DAILY: Yes [X] No [ ]
ARE THERE ANY VISIBLE DENTS, SCRAPES, CORROSIONS ON TANK: Yes [ ] No [X]
IF YES, STATE EXACT LOCATION_____

DOES THE TANK HAVE ANY CONTAINMENTS TO CATCH LEAKS OR SPILLAGE: Yes [X] No [ ]
DISTANCE TO NEAREST TANK/NO 30'/96,98 CONTAINMENT WALL (Approx.) 23"
PROPERTY LINE (Approx.)_____
LEAK TEST RESULTS None CORROSION PROTECTION MEASURES_____

DOES THE TANK APPEAR TO BE STRUCTURALLY SOUND & IN GOOD CONDITION: Yes [X] No [ ]
REFERENCE DRAWING NO./Date: None Available
CONCLUSIONS - IS THIS TANK FIT FOR USE: Yes [X] No [ ]

REMARKS:_____

APPENDIX 5

New Tank No. 98

and

Secondary Containment Structure

for

Tank Farm No. 6

Wang Engineering, Inc.

SAFETY-KLEEN CORP
HEBRON OH

TANK EVALUATION FORM

TANK NO./FARM: 98/6 DATE: 4/4/89 BY: JW

IS THIS AN EXISTING [ ] OR A NEW TANK [X]

SUFFICIENT STRUCTURAL STRENGTH:

BY MANUFACTURER DATA OR DESIGN STANDARDS: UL-142

BY CALCULATION:

1. Stress at the bottom head joints for tanks

$$S = \frac{aM}{\pi R^2 T} + \frac{W}{\pi D T}$$

a - Conversion factor (12 in./foot)
M - wind moment at bottom weld joint, in pound-feet.
W - weight of full tank in pounds (steel wt. and content) Content sp. gr. =1.3
D - tank diameter in inches
R - tank radius in inches
T - tank thickness in inches
Allowable stress: 14662 psi for SS
10795 psi for CS

$M = b D H^2$

b - 16.5 psi, for a wind velocity of 100 mph
D - tank diameter in feet
H - tank height in ft (excl. skirt)

If the calculated stress is less than or equal to the allowable stress, the tank thickness is satisfactory

S - 4777 psi

2. If the ratio of the tank height to tank diameter is more than 1.5, the tank support should be anchored.

CONCLUSION: Stress < Allowable Stress [X] Stress > Allowable Stress [ ]
COMPATIBILITY WITH THE WASTE: Yes [X] No [ ]
CORROSION RATE: N/A Inches Per Year
CORROSION PROTECTION MEASURE: Adequate [X] Not Adequate [ ]
STRUCTURAL SUPPORT: Adequate [X] Not Adequate [ ]
FOUNDATION SUPPORT: Adequate [X] Not Adequate [ ]
CONDITIONS OF SEAMS OR WELDS: Good [X] Defective [ ] If defective, describe:

CONNECTIONS: In Good Condition [X] Not in Good Condition [ ]
PRESSURE CONTROL: In Good Condition [X] Not in Good Condition [ ]
ANY PUNCTURES OR DENTS: Yes [ ] No [X]
SCRAPES ON TANK OR ON PROTECTIVE COATINGS: Yes [ ] No [X]
CRACKS Yes [ ] No [X]
CORROSION Yes [ ] No [X]
OTHER STRUCTURAL DAMAGES Yes [ ] No [X]
CONCLUSIONS - IS THIS TANK FIT FOR USE: Yes [X] No [ ] If no, explain:

SIGNED J. Wang

Wang Engineering

TANK INSPECTION/DESIGN FORM

FACILITY NAME AND LOCATION SK Hefner OH R.C. (shelf) DATE 3/16/89 BY JW
TANK NO./FARM 98/6 TANK HT/LENGTH: 32'6"/32'0" DIA: 10'6"
TYPE OF TANK: Vertical [X] Horizontal [ ] A/G [X] U/G [ ]
CAPACITY: 20,000 gal. MATERIAL STORED/CHARACTERISTICS: Mineral Spirits/Ignitable Chlorinated Solvents/Toxic

TOP HEAD: Dished [X] Cone [ ] Flat [ ] Open Top [ ]
BTM HEAD: Dished [ ] Cone [ ] Flat [X]
TYPE OF SUPPORT: Skirt [ ] Legs [ ] Saddles [ ] Slab [X]

SKIRT HT._____ SKIRT THK:_____ SHAPE/SIZE/HT OF LEG SUPPORT:_____

TYPE AND CONDITIONS OF FOUNDATION SUPPORT: Reinforced Concrete Slab, w/ minor hairline cracks

MATERIAL OF TANK CONSTRUCTION: Stainless Steel T-304 [ ] Carbon Steel [X]
TANK THICKNESS (DWG) SHELL:_____ ROOF PLATE:_____ BTM PLATE:_____ N/A
(FIELD MEAS.): SHELL: 0.176 (Min.) ROOF PLATE: 0.176 BTM PLATE:_____

YEAR BUILT OR ESTIMATED AGE: 2/89 MANUFACTURER'S NAME: Hamilton
DESIGN STANDARDS: UL-142 and NACE RP-01-78
IS THIS CLASSIFIED AS A NEW TANK? Yes [X] No [ ]

INFORMATION OF NAME PLATE ATTACHED TO THE TANK: Hamilton Tanks, UL Tag
LEVEL INDICATOR: Yes [X] No [ ] HIGH LEVEL ALARMS: Yes [X] No [ ]
TANK CONNECTIONS: Flanged [X] Screwed [ ]

TANK VENT SIZE: Open Vent _____ Closed Vent 3" Manway Emergency Vent 24" N/H
IS THE TANK INSULATED: Yes [ ] No [X] TANK PAINTED: Yes [X] No [ ]
PIPING: FROM THE TANK TO PROCESS UNIT: A/G X U/G _____
TYPE OF CONNECTIONS: Flanged [X] Welded [ ] Screwed [ ]

CONDITIONS OF CONNECTIONS, SEAMS, WELDS: Good
CAN THE PIPING, CONNECTION & SEAMS BE VISUALLY INSPECTED DAILY: Yes [X] No [ ]
ARE THERE ANY VISIBLE DENTS, SCRAPES, CORROSIONS ON TANK: Yes [ ] No [X]
IF YES, STATE EXACT LOCATION_____

DOES THE TANK HAVE ANY CONTAINMENTS TO CATCH LEAKS OR SPILLAGE: Yes [X] No [ ]
DISTANCE TO NEAREST TANK/NO 38"/96 CONTAINMENT WALL (Approx.) 39"
PROPERTY LINE (Approx.) >200'
LEAK TEST RESULTS None CORROSION PROTECTION MEASURES Paint

DOES THE TANK APPEAR TO BE STRUCTURALLY SOUND & IN GOOD CONDITION: Yes [X] No [ ]
REFERENCE DRAWING NO./Date:_____
CONCLUSIONS - IS THIS TANK FIT FOR USE: Yes [X] No [ ]

REMARKS:_____

SAFETY-KLEEN CORP. HEBRON OH RECYCLE CENTER

SECONDARY CONTAINMENT STRUCTURE EVALUATION FORM

(Tank Farm No. 6)

AVAILABILITY OF SECONDARY CONTAINMENT STRUCTURE: Yes [X] No [ ]

SUFFICIENT STRENGTH: Yes [X] No [ ] NEED TO BE CONFIRMED BY A LICENSED ENGINEER.

COMPATIBILITY WITH WASTE: Yes [X] No [ ]

ADEQUACY OF FOUNDATION SUPPORT: Yes [X] No [ ] Based on similar condition + past performance

CONTAINMENT CAPACITY:

DESIGNED: _____

CALCULATED (Net) 33,119

LARGEST TANK CAPACITY: 20,000

25-YEAR, 24-HOUR RAINFALL VOLUME: 4,690 gal

ADEQUATE: Yes [X] No [ ]

CAPABLE OF DETECTING AND COLLECTING LEAKS OR RELEASES ON A DAILY BASIS:

Yes [X] No [ ]

CAPABILITY OF PREVENTING RUN-ON: Yes [X] No [ ]

FREE OF CRACK, GAPS, OR LEAKY JOINTS: Yes [ ] No [X] Minor small + hairline cracks

AVAILABILITY OF IMPERMEABLE COATING OR LINING OVER CONCRETE: Yes [ ] No [X] Will be applied

OVERALL ADEQUACY OF THE SECONDARY CONTAINMENT STRUCTURE: Fair

Wang Engineering

SECONDARY CONTAINMENT STRUCTURE INSPECTION FORM

FACILITY NAME AND LOCATION: Safety-Kleen Corp. Hebron OH Recycle Center

TANKFARM # 6 DATE: 3/16/89 NAME: J. Wang

CONDITIONS OF LADDERS AND STAIRWAYS, PLATFORMS, WALKWAYS: Good Conditions
(wear, corrosion)

CONTAINMENT STRUCTURE:

Type (SLAB): Earth [ ] P.C. Concrete [ ] Reinforced [X] Cement Block [ ]
(WALL): Earth [ ] P.C. Concrete [ ] Reinforced [X] Cement Block [ ]
Other: Describe

Dimensions and wall thickness: 47'x29'6" + 16'x24' (Interior Dimensions), 6" wall, 36" Depth

Seal Coating Yes [ ] No [X]

Cracks and gaps: Some hairline cracks

Resistance water stops at all joints: Yes [ ] No [X]

Leak and spillage collection system: Sumps

Leak detection system: Yes [ ] No [X]

Capable of detecting and collecting leaks and releases on a daily basis, (including ancillary equipment): Yes

Capability of preventing run-on: Yes [X] No [ ]

Structural design drawing (date, number): SK Drawings E11730 & E11731, Dated 1/30/. and D10855, Dated 1/7/83; Rev. ? 5/24

REFERENCE FOUNDATION INVESTIGATIONS REPORT: None

FIRE FIGHTING EQUIPMENT: Fire Extinguisher nearby

MINIMUM DISTANCE: Tank to wall 23"

Wall to property boundary >200'

AVAILABILITY OF AUTOMATIC SHUT-OFF DEVICES: Yes [X] No [ ] to control overfill of tank

GENERAL CONDITION/ADEQUACY: Good [X] Not satisfactory [ ]

MARKS:

KEL-PAR COMPANY
MECHANICAL CONTRACTORS
6080 JACKSONTOWN RD. S.E.
NEWARK, OHIO 43055
STATE ROUTE 13 SOUTH

PHONE 323-0259
Fax -614-323-1229

26 September 1990

Safety Kleen Corp.
777 Big Timber Road
Elgin, ILL 60120-1499

Attention: Mr. Gerritt Koninck

Dear Mr. Koninck:

In regard to our installation of tank 98 in tank farm #6, prior to installation the tank was visually inspected for weld breaks, punctures, cracks, corrosion and the condition of the bottom coating, and the paint was checked with no flaws being found.

Upon installation, the tank was pressure tested at 3 PSI and soap-checked; and all piping at 150 PSI with no drop in pressure. All piping is installed according to API Publication 1615, B31.3 and 31.4.

I certify under penalty of law that this document and attachments were prepared under my direction or supervision in accordance with a system designed to assure that qualified personnel properly gathered and evaluated the information submitted based on the inquiry of the person or persons who managed the system or those persons directly responsible for gathering the information. The information submitted is to the best of my knowledge and belief true and accurate and complete. I am aware that there are significant penalties for submitting false information.

Sincerely,

KEL-PAR COMPANY, INC.

James L. Dickson

James L. Dickson

/ksh

ATTACHMENT 4-11

CONCRETE FACILITIES EVALUATION
[TANK FARMS, CONTAINER STORAGE AREA, AND TRUCK STATIONS]
PREPARED BY: HOYER-SCHLESINGER-TURNER INC.

SOILS REPORT
PREPARED BY: CTL ENGINEERING

HOYER-SCHLESINGER-TURNER inc.
ENGINEERS - CONSTRUCTORS
300 west adams street chicago illinois 60606 telephone 263 0556 area code 312

October 3, 1990

SAFETY-KLEEN CORP.
Technical Center
P.O. Box 92050
Elk Grove Village, IL 60009

Subject: Hebron Recycle Center
Evaluation of Concrete Foundations
and Containment Systems
HST Project No. 1731-3

Gentlemen:

This letter together with the enclosed supporting documents completes our investigation and preparation of calculations required to document the existing concrete facilities at your Hebron, Ohio Recycle Center. The concrete work falls into three categories: (a) Tank Farms, (b) Container Storage Areas, and (c) Truck Stations. Each has been studied separately and divided into subgroups as needed to facilitate calculations.

Criteria for design is based on the following design codes:

(a) B.O.C.A. - 1987 Issue
(b) A.N.S.I. - 1988 Issue
(c) A.C.I. - Current (Concrete Design)
(d) P.C.A. - Concrete Floors on Ground.

Local Conditions chosen for analysis were as follows:

(a) Seismic Zone No. 1
(b) Wind Force 70 MPH
(c) Snow Load 20 PSF
(d) Liquid SpG. 1.60
(e) Soil Pressure 3,000 PSF (unless noted otherwise)

H-S-T

As part of the program undertaken to investigate the subject, concrete supports and containment systems calculations were produced to verify the as-constructed structures. The Soils Report as prepared by CTL Engineering has been reviewed and made use of in preparing the analysis work as presented. Referring to Note (e) above, a loading of 3,000 PSF on the Hebron site is most conservative.

Calculations were developed by Mr. Irving N. Sonkin, a senior structural engineer employed by Hoyer-Schlesinger-Turner, Inc., checked by and under the direct supervision of the undersigned, a registered professional engineer in the State of Ohio.

Based on the calculations produced, design information taken from construction drawings and a personal observation/inspection at the plantsite, we conclude and I certify that to the best of our ability that the noted structures are placed on suitable foundation soils, capable of resisting superimposed loads without undue settlement or uplift tendencies. The above certification covers the following:

Tank Farms No. 1 thru No. 6 inclusive
Container Storages No. 1 thru 3 inclusive
Truck Stations No.1, No.2, No.4, No.5, and No.7 thru No.9 incl.

Respectfully submitted,

HOYER-SCHELSINGER-TURNER, INC.
Consulting Engineers

Lee Schlesinger, P.E.
Ohio E-23258
President

LS/ar

STATE OF OHIO
LEE SCHLESINGER
E-23258
REGISTERED PROFESSIONAL ENGINEER

October 3, 1990

HOYER-SCHLESINGER-TURNER, INC.

SHEET 1 OF 41
PROJECT NO. 1731-3
DATE 9 21 90
BY I.N. SONKIN

PROJECT SAFETY-KLEEN HEBRON, OHIO

SUBJECT EXIST. TANK FARM, CONTAIN. STORAGE, TRUCK STATION DESIGN CHECK.

TABLE OF CONTENTS

1. TABLE OF CONTENTS SHT. 1
2. DESIGN CRITERIA SHT. 2
3. EXIST. TANK FARMS DESIGN CHECK SHTS. 3 - 30
4. EXIST. CONTAINER STORAGES DESIGN CHECK - SHTS 31 - 37
5. EXIST. TRUCK STATIONS DESIGN CHECK SHTS 38 - 40

BIBLIOGRAPHY SHT. 41

STATE OF OHIO
LEE SCHLESINGER
E-23258
REGISTERED PROFESSIONAL ENGINEER

HOYER-SCHLESINGER-TURNER, INC.

SHEET 2 OF 41
PROJECT NO. 1731-3
DATE 9.21.90
BY I. N. SONKIN

PROJECT SAFETY - KLEEN, HEBRON, OHIO

SUBJECT EXIST. T. FARM CONTAIN. STORAGE TRUCK STATION
DESIGN CRITERIA.

THE FOLLOWING IS THE LIST OF FACILITIES WHICH ARE TO BE EVALUATED FOR STRUCTURAL INTEGRITY ON CLIENT'S REQUEST :

TANK FARMS No. 1 THRU No. 6

CONTAINER STORAGES No. 1 THRU No. 3

TRUCK STATIONS No. 1, No. 2, No. 4, No. 5 & No. 7 THRU No. 9 .

ACCORDING TO THE BOCA-87 AS WELL AS AMERICAN NATIONAL STANDARD CODE -88 THE SEISMIC ZONE IS 1.

THE SAME CODES INDICATE THAT THE BASIC WIND SPEED FOR HEBRON, OHIO IS 70 MPH AND THE GROUND SNOW LOAD IS $P_g = 20$ PSF.

THE FACILITIES DESCRIBED ABOVE WERE BUILT IN MID-EIGHTIES.
CONCRETE SHOWS NEITHER FORM OF DISTRESS NOR DETERIORATION AND IS CURRENTLY SAFE FOR CONTINUED USE. HOWEVER, A FEW HAIR LINE CRACKS DO OCCUR ON SLABS AND DIKE WALLS.

CONCRETE $f_c' = 4000$ PSI (DWGS EXIBIT No. 33, 34, 25D)
— " — 3500 PSI (DWG. EXIBIT No. 24B)
STEEL - 60 GRADE (DWG. 24B)

CONSERVATIVELY ASSUME $f_c' = 3500$ PSI; 60 GRADE FOR ALL FACILITIES. I.N.O.

THE MINIMUM BEARING SOIL CAPACITY CONSERVATELY ASSUMED 3000 PSF ∵ SOIL BORINGS ARE NOT AVAILABLE AT ALL TANK FARM LOCATIONS.

STATE OF OHIO
LEE SCHLESINGER
E-23258
REGISTERED PROFESSIONAL ENGINEER

HOYER-SCHLESINGER-TURNER, INC.

PROJECT SAFETY-KLEEN, HEBRON, OHIO

SUBJECT EXIST. TANK FARM No. 1 DESIGN CHECK

SHEET 3 OF 41

PROJECT NO. 1731-3

DATE 3.21.90

BY I. N. SONKIN

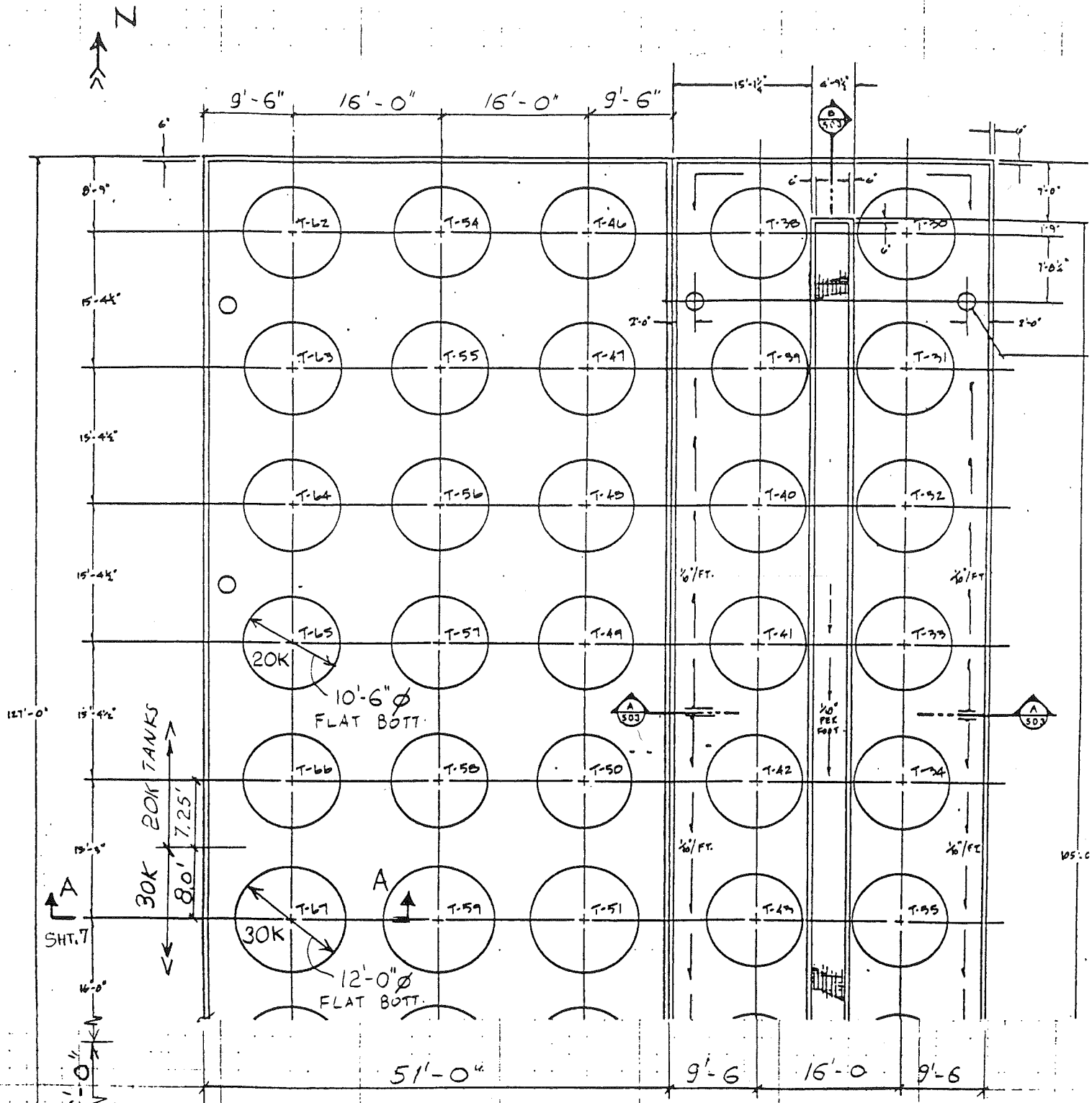

PARTIAL PLAN OF T.F. No. 1

PROJECT SAFETY-KLEEN HEBRON, OHIO

SUBJECT EXIST. TANK FARM No. 1 DESIGN CHECK

30 K GAL. TANK, FLAT BOTT, 12'-0" ø

TANK HT ≈ $30\,000_{GAL} \times 0.1337 \frac{CU.F}{GAL} \div \left(\frac{\pi \times 12^2}{4}\right) = 35.5'$

TANK SELFWEIGHT ≈ $\pi\left(\underset{\text{SHELL}}{12' \times 35.5'} + \underset{\text{TOP \& BOTT}}{12^2 \tfrac{1}{4} \times 2}\right) \times \underset{\text{1/4 PL}}{10.2_{PSF}} \times \underset{\text{MISC.}}{1.06} =$

$= 16.92^K$

LIQUID WT ≈ $30000_{GAL} \times 8.336^{\#}/_{GAL} \times \underset{\text{SP. GRAV.}}{1.6}$ $= 400.13^K$

TOTAL 417.05^K

ASSUME THAT ALL TANKS ARE FULL

SOIL PRESSURE TO BE FOUND. CONSIDER LEFT PART OF T. FARM.

LEFT (WEST) PART OF T. FARM No. 1 HAS 9 - 30K TANKS (SOUTH) AND 15 - 20K TANKS (NORTH).

30 K TANKS AREA = $[16.0' \times 2 + 8.0' + 9.5'] \times 51.0' = 2525\ SF$

30K TANKS WT: 9 TANKS × 417.05^K = 3753.5^K

DIKE WT: $0.5' \times 2' \times (51.0' + 49.5' \times 2) \times 0.15 = 22.5^K$ REF. TO

SLAB WT: $0.67' \times 51.0' \times 49.5' \times 0.15 = 253.7^K$ SHEET 5

CONCRETE SKIRT WT: $1.0' \times 1.33'(51' + 49.5' \times 2) \times 0.15 = 29.9^K$

TOTAL WT 4059.8^K

SOIL PRESSURE = $4059.8^K \div 2525\ SF = 1.61\ KSF \ll 3.0\ KSF$ FOR 30K TANKS AREA

OK

HOYER-SCHLESINGER-TURNER, INC.

PROJECT SAFETY-KLEEN HEBRON, OHIO

SUBJECT EXIST. TANK FARM No. 1 DESIGN CHECK

SHEET 5 OF 41
PROJECT NO. 1731-3
DATE 9.23.90
BY INS

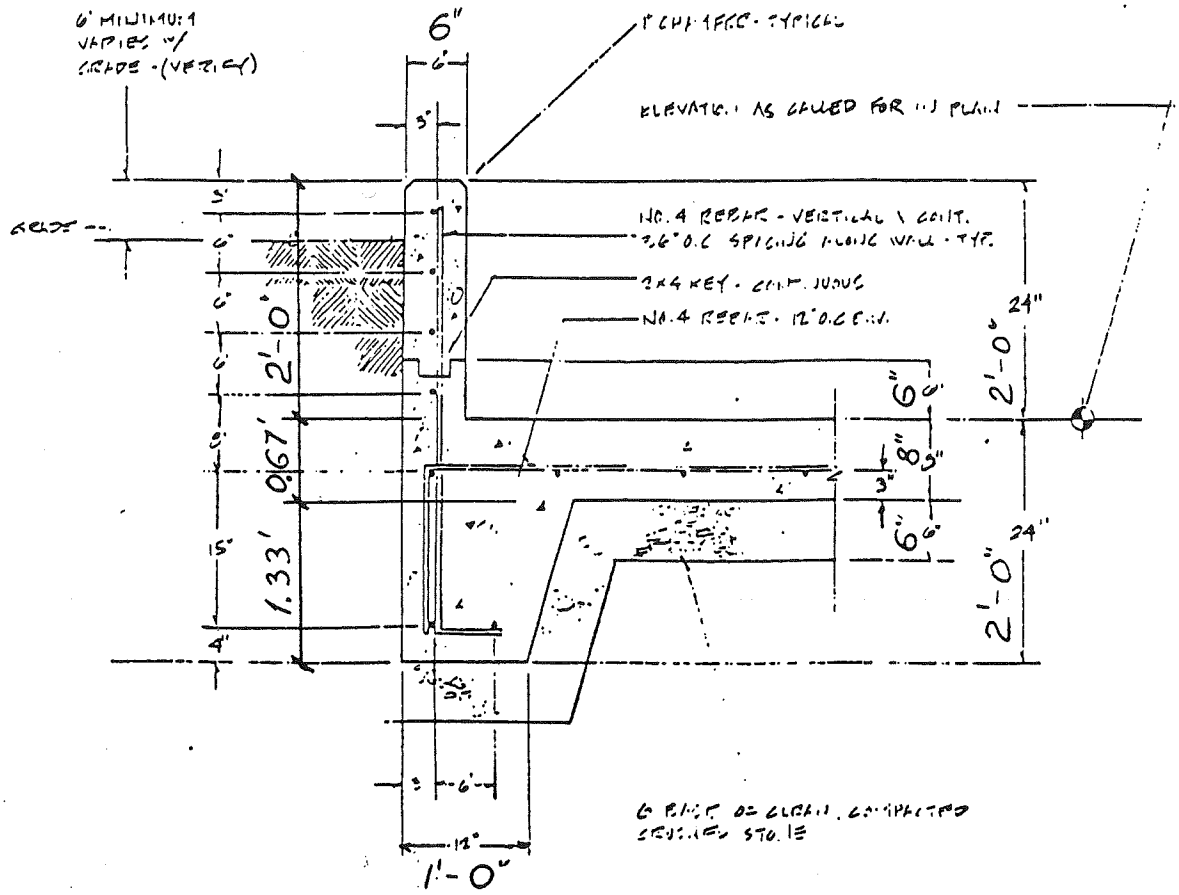

- SECTION 5015.3 -

EXIBIT No. 32

NO SCALE: 1" = 1'-0" DWG. 90-64200-506, REV. 0

THIS DETAIL IS TYPICAL FOR T. FARMS No. 1 AND No. 2 (NORTH DIKE ONLY)

FIND SOIL PRESSURE UNDER SINGLE 30K TANK

AREA = $\pi \times 6.0^2$ = 113.1 SF

TANK SELFWEIGHT (WITH LIQUID) = 417.05^K

CONC. SLAB WEIGHT = 0.67' × 113.1 SF × 0.15 K/CF = 11.37^K

428.42^K

SOIL PRESSURE = $\frac{428.42^K}{113.1 \text{ SF}}$ = 3.79 KSF > 3.00 KSF

∴ SOIL PRESSURE UNDER THE TANK IS MORE, THAN MINIMUM SOIL BEARING CAPACITY.
THE REMAINDER WILL BE TRANSFERRED TO THE PARTS OF THE SLAB OUTSIDE OF THE TANK, AND THAT TAKES CARE OF THE SOIL COMPRESSION & SETTLEMENT.

UPLIFT PRESSURE NOT TAKEN BY SOIL DIRECTLY UNDER TANK IS

3.79 KSF − 3.00 KSF = 0.79 KSF

CONSIDER CANTILEVER WITH UPLIFT SOIL PRESSURE.

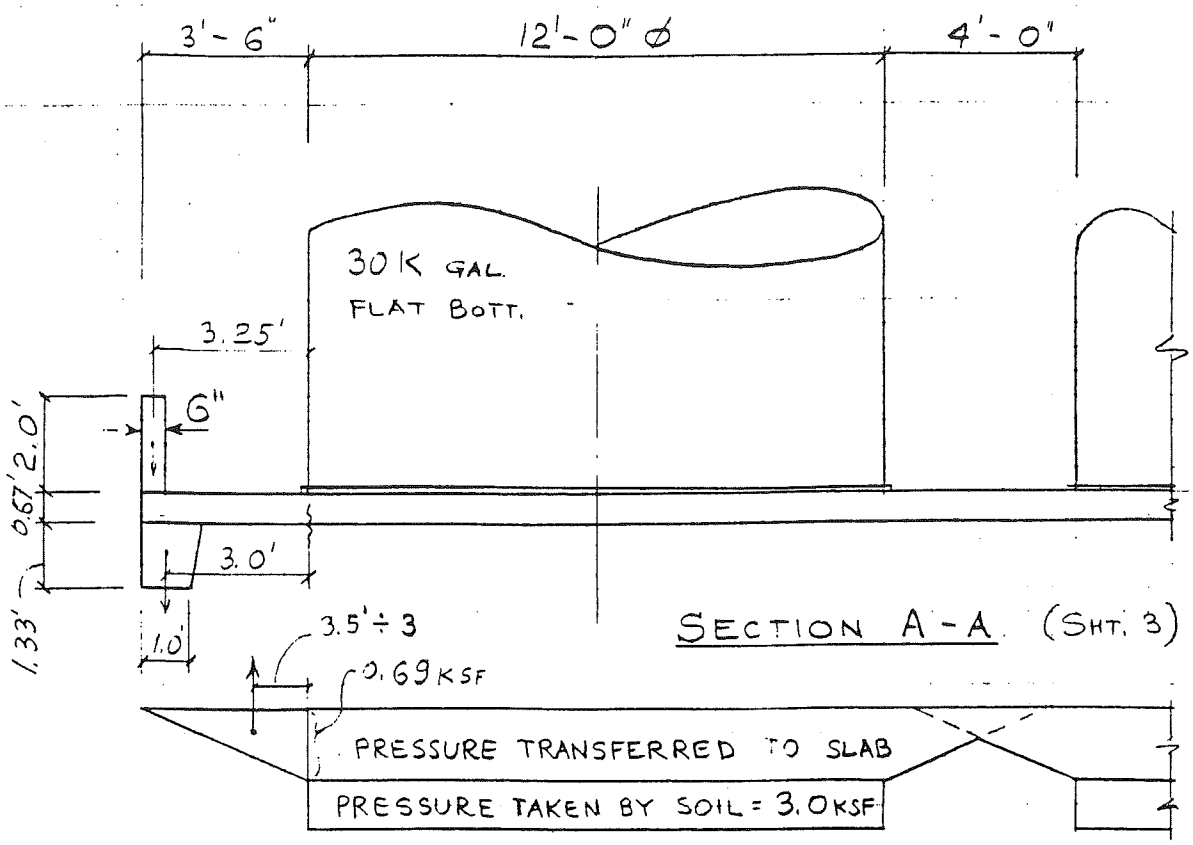

TO CHECK THE SLAB USE THE SUM OF DOWNWARD LOADS WITHOUT OF SELFWT. OF THE SLAB ITSELF (RE: PECK'S "FOUNDATION ENGINEERING, p. 188)

UPWARD PRESSURE WILL BE $(0.79\,KSF - \underset{(SLAB)}{11.37^K}/113.1\,SF) =$

$= 0.69\,KSF$

CONSIDER 3'-6" CANTILEVER WITH UPLIFT SOIL PRESSURE

$$M_{CANT} = \frac{3.5'}{2} \times 0.69\,KSF \times 1.0'\,STRIP \times \frac{3.5'}{3} - \underset{DIKE}{2.0' \times 0.5' \times 1.0' \times 0.15\,K/CF} \times 3.25' -$$

$$- \underset{SKIRT}{1.0' \times 1.33} \times \underset{STRIP}{1.0'} \times 3.0' \times 0.15\,K/CF = 0.32'^K$$

$$A_s = \frac{M}{f_s J d}$$ (H. PARKER, p. 307) $f'_c = 3500\,psi$, GRADE 60 STEEL

$$A_s = \frac{0.32'^K}{1.76\,(8" - 3.25")} = 0.04\,IN^2$$

EXIST. #4 @ 12", $A_s = 0.20\,IN^2 > 0.04\,IN^2$ ∴ OK

CHECK 4.0' SLAB SPAN BETWEEN TWO TANKS. REF. TO SHT. 7

ASSUME PRESSURE DIAGRAM IS HORIZONTAL AND THE PRESSURE IS 0.69 KSF (UPLIFT)

PER 1' WIDE STRIP BEAM

$M = \frac{w\ell^2}{16} = \frac{0.69^{k/1} \times 4.0^2}{16} = 0.69^{'k}$; EFFECTIVE DEPTH $d = 3'' + \frac{0.5''}{2} = 3.25''$ (CLR., BAR #4/2)

$A_s = \frac{0.69^{'k}}{1.76(3.25'')} = 0.12\ in^2 < A = 0.2\ in^2$ (EXIST. #4 @ 12") OK

BY INSPECTION, THERE IS NO NEED TO CHECK SLAB FOR ZONE 1 SEISMIC AND 70 MPH WIND LOAD, ∴ THE LOADS ARE LOW AND ALL ALLOW. STRESSES WOULD BE INCREASED ONE-THIRD BY BOCA-CODE

20 K GAL. TANKS AREA

20 K GAL TANK, FLAT BOTT, 10'-6" Ø

TANK HT. $\approx 20\,000_{GAL} \times 0.1337 \frac{cu.f}{GAL} \div \left(\frac{\pi \times 10.5^2}{4}\right) = 30.9'$

TANK SELFWEIGHT $\approx \pi \left(\underbrace{10.5' \times 30.9'}_{SHELL} + \underbrace{10.5^2 \frac{1}{4} \times 2}_{T\ \&\ BOT.}\right) \times \underbrace{10.2\ PSF}_{4\#} \times \underbrace{1.06}_{MISC.} =$

$= 12.89^k$

LIQUID WT. $\approx 20000_{GAL} \times 8.336\ \#/_{GAL} \times \underbrace{1.6}_{SP.\ GRAV.}$ $= 266.75^k$

TOTAL $= 279.64^k$

FIND SOIL PRESSURE UNDER SINGLE 20K GAL TANK

AREA $= \pi \times 5.25^2 = 86.6$ SF

TANK WT $= 279.64^k$

CONC. SLAB WT $= 0.67' \times 86.6_{SF} \times$
$\times 0.15^{k}/_{C.F} = 3.70^k$

288.34^k

SOIL PRESSURE UNDER SINGLE 20K TANK =

= 288.34^{K} ÷ 86.6 SF = 3.33 KSF > 3.0 KSF

BY INSPECTION, COMPARING WITH SHEETS 6, 7 & 8 SAY: SOIL PRESSURE UNDER THE TANK IS TRASFERRED TO ALL SLAB AND LOAD ON THE SLAB IS INSIGNIFICANT.

BY INSPECTION, THE RIGHT (EAST) PART OF T. FARM No. 1 COMPARED WITH LEFT (WEST) PART IS ADEQUATE.

NOTE: THE TANKS 7.5K, 10K & 15K GAL. WERE NOT CONSIDERED AS HAVING THE SAME AREA AS 20K GAL. TANKS. THEY CREATE MUCH LESS PRESSURE ON SLAB/SOIL.

SAY: OK

PROJECT HEBRON, OHIO

SUBJECT EXIST. TANK FARM No 1 DESIGN CHECK

CHECK THE SLAB

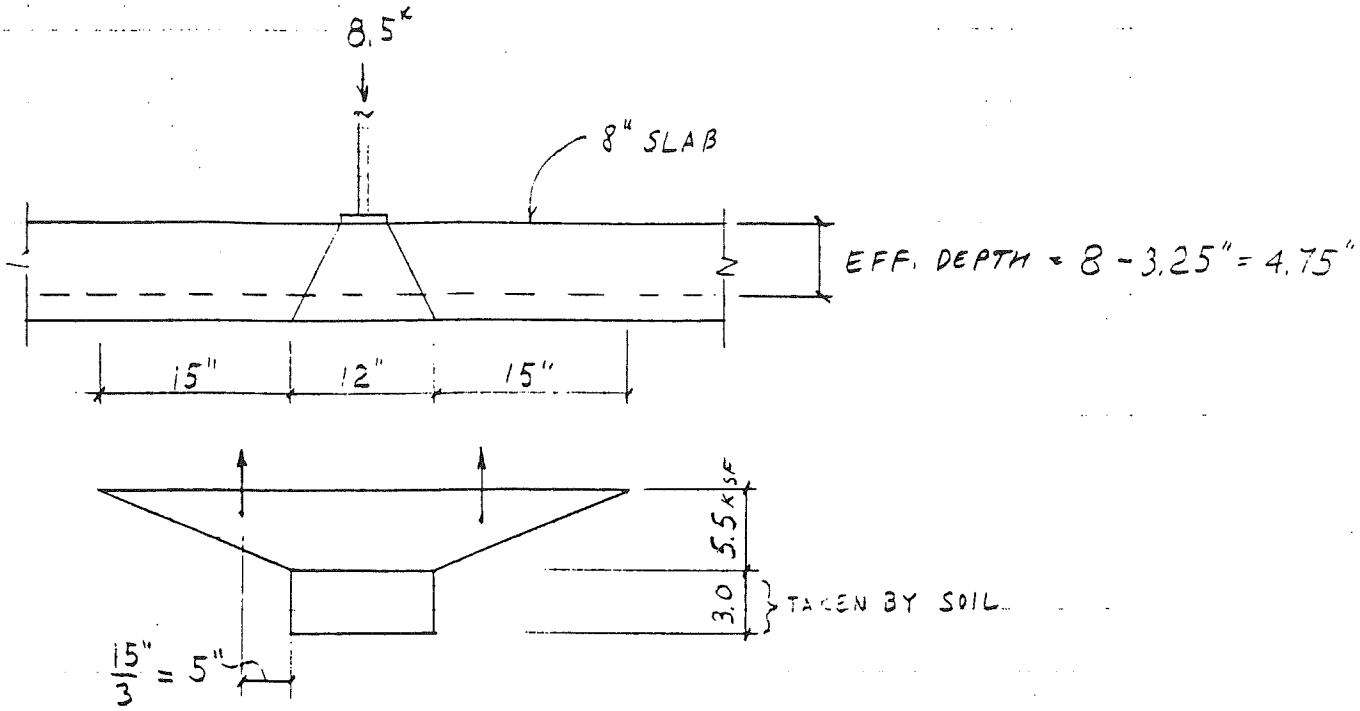

CONSIDER 15" CANTILEVER

$$M = \frac{15''}{12 \cdot 2} \times 5.5\,KSF \times \frac{15''}{12 \times 3} \times 1'\,STRIP = 1.43'^{k}$$

$$A_s = \frac{1.43'^{k}}{1.76 \times 4.75''} = 0.17\,in^2$$

EXIST. #4 @ 12"; $A_s = 0.20\,in^2 > 0.17\,in^2$ ∴ OK

A 20K TANK HAS A CONE BOTTOM.

TANK WT (WITH LIQUID) IS 279.64^K (SHT 3)

TANK SKIRT CIRCUMFERENCE = $\pi \times 10.5' = 33.0'$

LOAD PER 1 LIN. FT OF SKIRT = $279.64^K \div 33.0' = 8.47$ K/LF

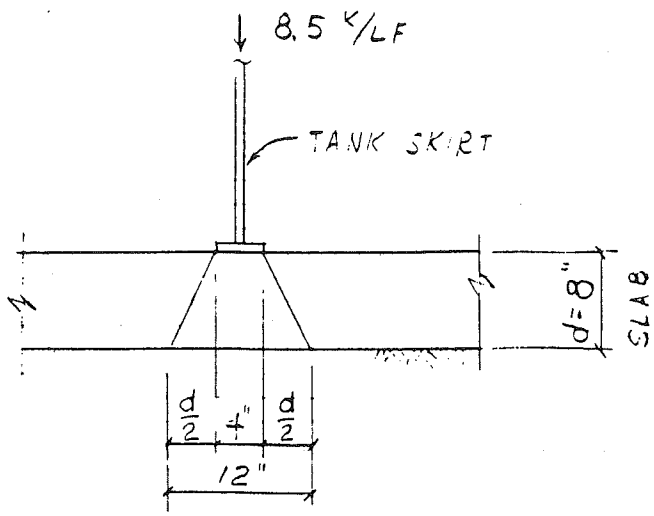

SHEAR CHECK. REF. TO 11.12.2.1 OF ACI 318-89.

USE FORMULA (11-36) $\beta_c = \frac{12''}{4''} = 3$

$V_c = \left(2 + \frac{4}{\beta_c}\right)\phi\sqrt{f_c'}\, b_o\, d$ PERIMETER $b_o = 2_{SIDES} \times 12'' = 24''$

$V_c = \left(2 + \frac{4}{3}\right) 0.85\sqrt{3500_{PSI}} \times 24'' \times 8'' = 32.2^K > 8.5^K$ OK

HOYER-SCHLESINGER-TURNER, INC.

PROJECT S HEBRON, OHIO

SUBJECT EXIST. TANK FARMS No 2 & 3 DESIGN CHECK

SHEET 12 OF 41

PROJECT NO. 1731-3

DATE 9.25.90

BY INS

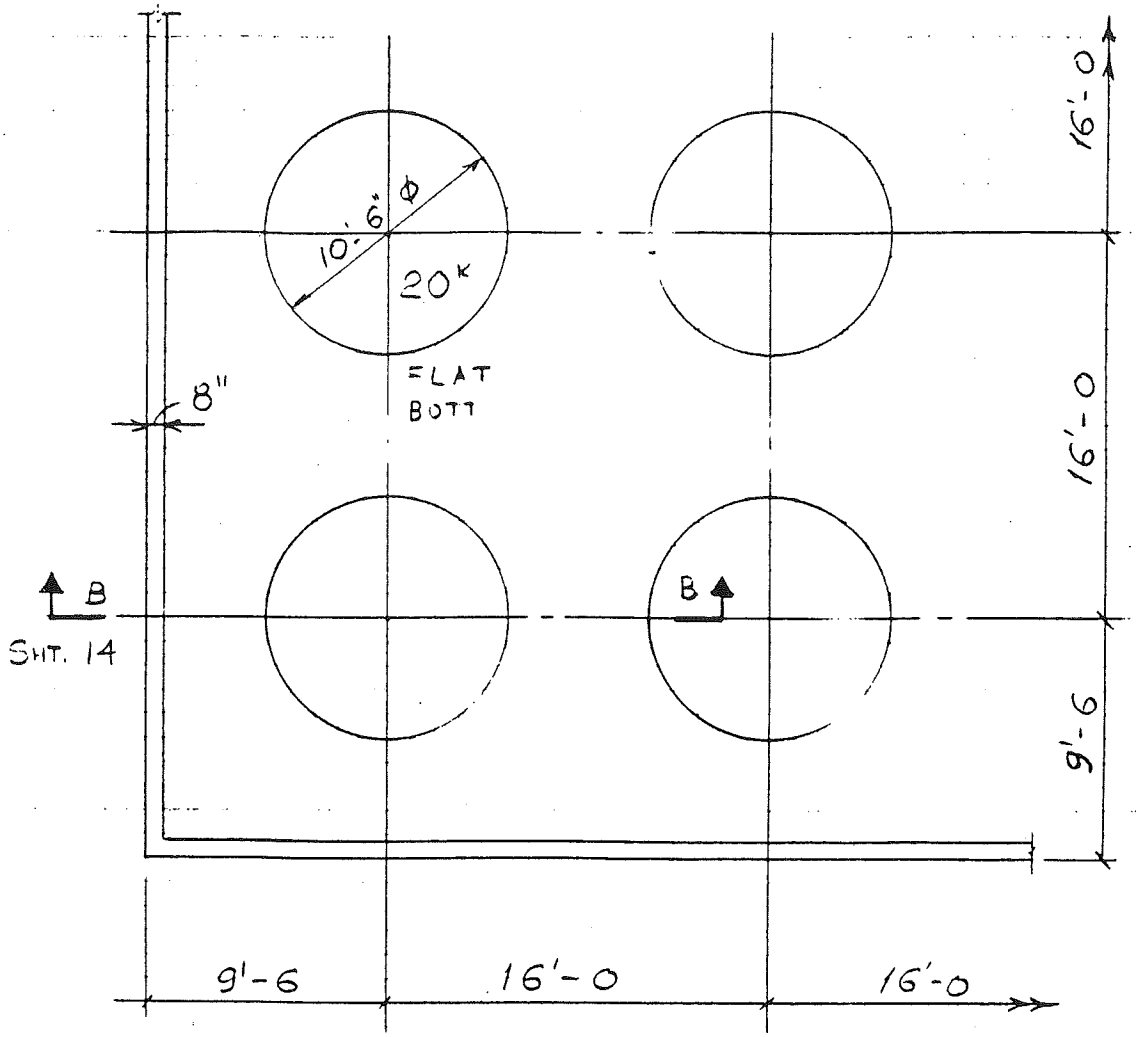

PARTIAL PLAN

TANK FARM No. 2, 3

HOYER-SCHLESINGER-TURNER, INC.

SHEET 13 OF 41
PROJECT NO. 1731-3
DATE 9.25.90
BY INS

PROJECT S HEBRON, OHIO

SUBJECT EXIST. TANK FARMS No. 2 & 3 DESIGN CHECK

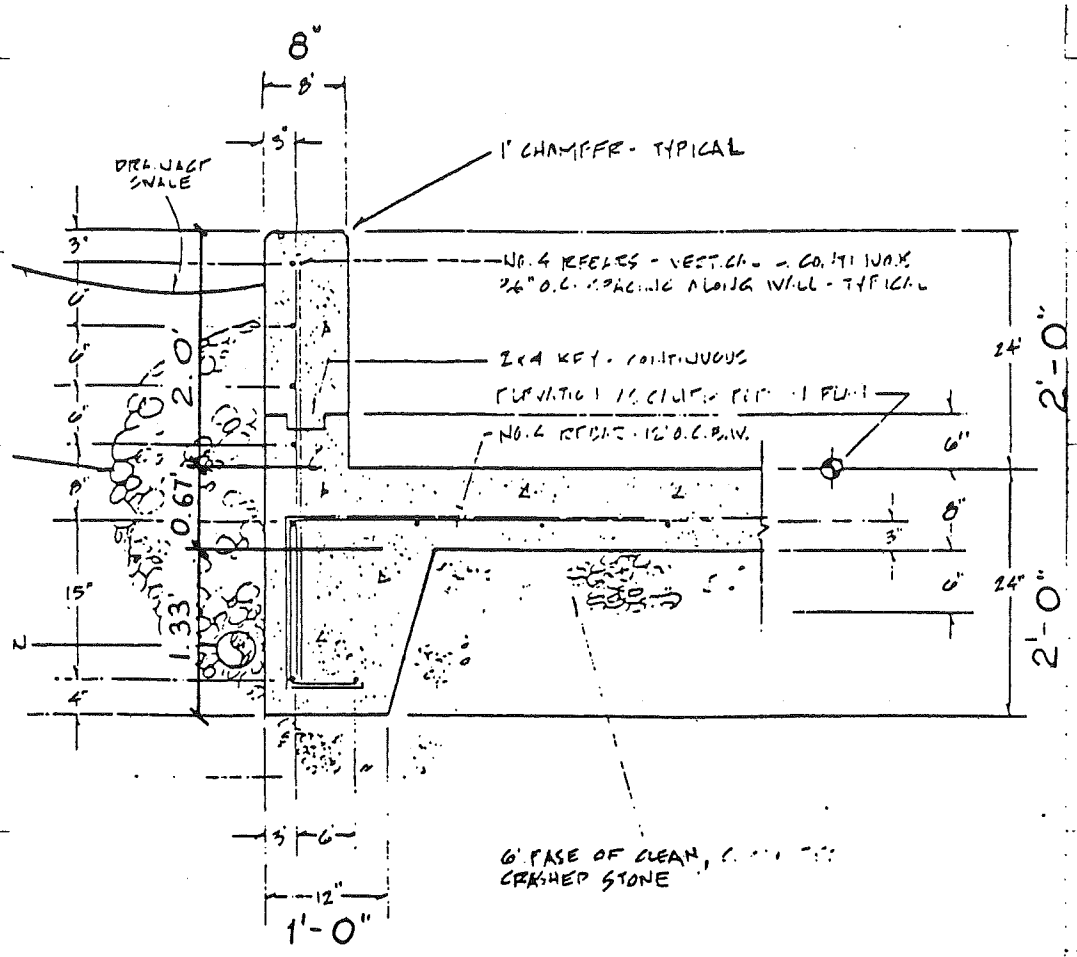

SECTION 5005.4 — EXIBIT No. 32

NO SCALE: 1" = 1'-0 S-K DWG. 90-6420506 REV. 0

THIS DETAIL IS TYPICAL FOR TANK FARM No. 2 (EXCEPT OF NORTH DIKE) AND No. 3

THE SOIL PRESSURE UNDER SINGLE 20K TANK IS 3.33 KSF (IDENTICAL TO T.F. #1, SHT. 9).

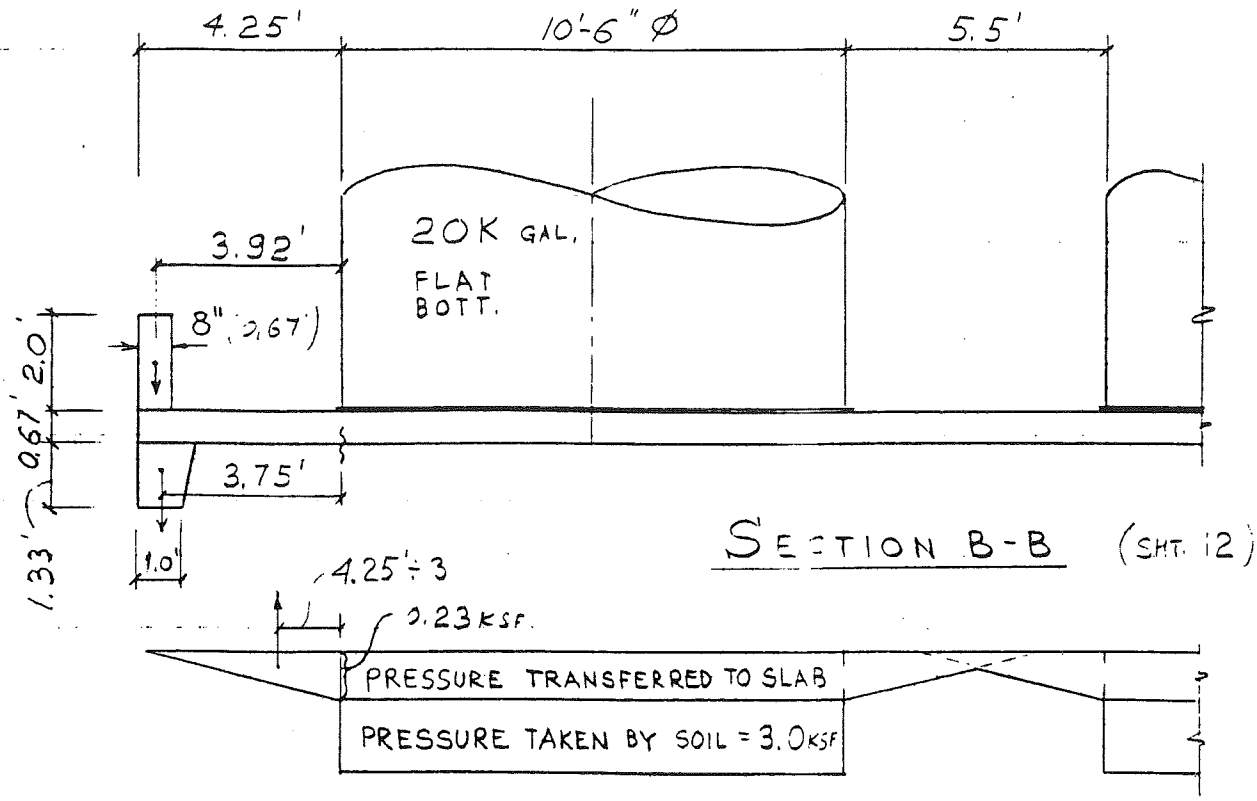

SIMILAR TO CALC. ON SHT. 6, UPLIFT SOIL PRESSURE IS 3.33 KSF − 3.00 KSF (ALLOW.) = 0.33 KSF

SIMILAR TO CALC. ON SHT. 7 FIND DESIGN PRESSURE TO CHECK THE SLAB

UPWARD PRESSURE = 0.33 KSF − 8.7K/36.6 SF (SLAB) =

= 0.23 KSF.

CONSIDER 4.25' CANTILEVER WITH UPLIFT SOIL PRESSURE

$$M_{CANT.} = \frac{4.25'}{2} \times 0.23_{KSF} \times 1.0'_{STRIP} \times \frac{4.25'}{3} - \underset{DIKE}{2.0' \times 0.67'} \times 1.0'_{STRIP} \times$$

$$\times 0.15_{K/CF} \times 3.92' - \underset{SKIRT}{1.0' \times 1.33'} \times \underset{STRIP}{1.0'} \times 3.75' \times 0.15_{K/CF} =$$

$$= 0.69'^{K} - 0.79'^{K} - 0.75'^{K} = -0.84'^{K}$$

THE NEGATIVE SIGN SHOWS, THAT MOMENT FROM UPWARD SOIL PRESSURE TRANSFERRED TO SLAB IS LESS, THAN MOMENT FROM DIKE AND CONCRETE SKIRT. WEIGHT OF SKIRT & DIKE IS TAKEN BY SOIL UNDER THE SKIRT. SEE FOLLOWING PRESSURE CALC.

$$(\underset{DIKE}{2' \times 0.67'} + \underset{SKIRT}{1.33' \times 1.0'})\, 0.15^{K}/_{CU.F} \div (\underset{SKIRT}{1.0'} \times \underset{STRIP}{1.0'}) = 0.40_{KSF} \ll \underset{ALLOW.}{3.0_{KSF}}$$

UPWARD PRESSURE WAS CONSERVATIVELY NEGLECTED

SAY: REINF. #4 @ 12" AND 8" SLAB ARE ADEQUATE IN 4.25' CANTILEVER.

OK

CHECK 5.5' SPAN BETWEEN TWO TANKS

ASSUME PRESSURE DIAGRAM IS HORIZONTAL AND THE PRESSURE IS 0.23 KSF (UPLIFT)

PER 1' WIDE STRIP BEAM

$$M = \frac{wl^2}{16} = \frac{0.23^{K}/_{1} \times 5.5^2}{16} = 0.43'^{K}; \quad \text{EFF. DEPTH } d = 3.25''$$

$$A_s = \frac{0.43'^{K}}{1.76(3.25'')} = 0.08_{IN^2} < 0.20_{IN^2} \quad (\text{EXIST } \#4 @ 12'') \qquad \text{OK}$$

THE TANK FARM No. 2 HAS A FEW TANKS 7.5K & 15K GAL. WITH FLAT BOTTOM. THEY WERE NOT CONSIDERED ∵ HAVING THE SAME AREA AS 20K GAL TANKS THEY CREATE MUCH LESS PRESSURE ON SLAB/SOIL.

ALSO THE TANK FARM No 2 HAS A FEW TANKS 30K GAL BY INSPECTION, REFERRING TO SHT. 7 (30K TANK FOR T.F. #1) WE CAN SEE THAT SLAB DIKE DETAILS AND TANK LAYOUT ARE SIMILAR AND EXISTING SLAB REINFORCEMENT IS QUITE SUFFICIENT.

SAY: OK

THE TANK FARM No. 3 HAS A TANK 15K GAL. WITH CONE BOTTOM REFFERING TO SHT. 10 FIND THE PRESSURE PER LIN. FOOT OF CIRCUMFERENCE.

TANK SELFWEIGHT ≈ 12.0^K (CONSERV.)

LIQUID WT ≈ 15000$_{GAL}$ × 8.336$^{\#}/_{GAL}$ × 1.6 (SP. GRAV) = 200.06^K

TOTAL 212^K

TANK SKIRT CIRCUMFERENCE IS $\pi(10.5') = 32.9'$

PRESSURE $= \frac{212^K}{32.9'} = 5.43^{K}/_{LF} < 8.5^{K}/_{LF}$ ON SHT. 10 FOR SIMILAR CONDITIONS.

SAY: OK

HOYER-SCHLESINGER-TURNER, INC.

PROJECT S HEBRON, OHIO

SUBJECT EXIST. TANK FARM No. 4 DESIGN CHECK

SHEET 17 OF 41
PROJECT NO. 1731-3
DATE 9.23.90
BY INS

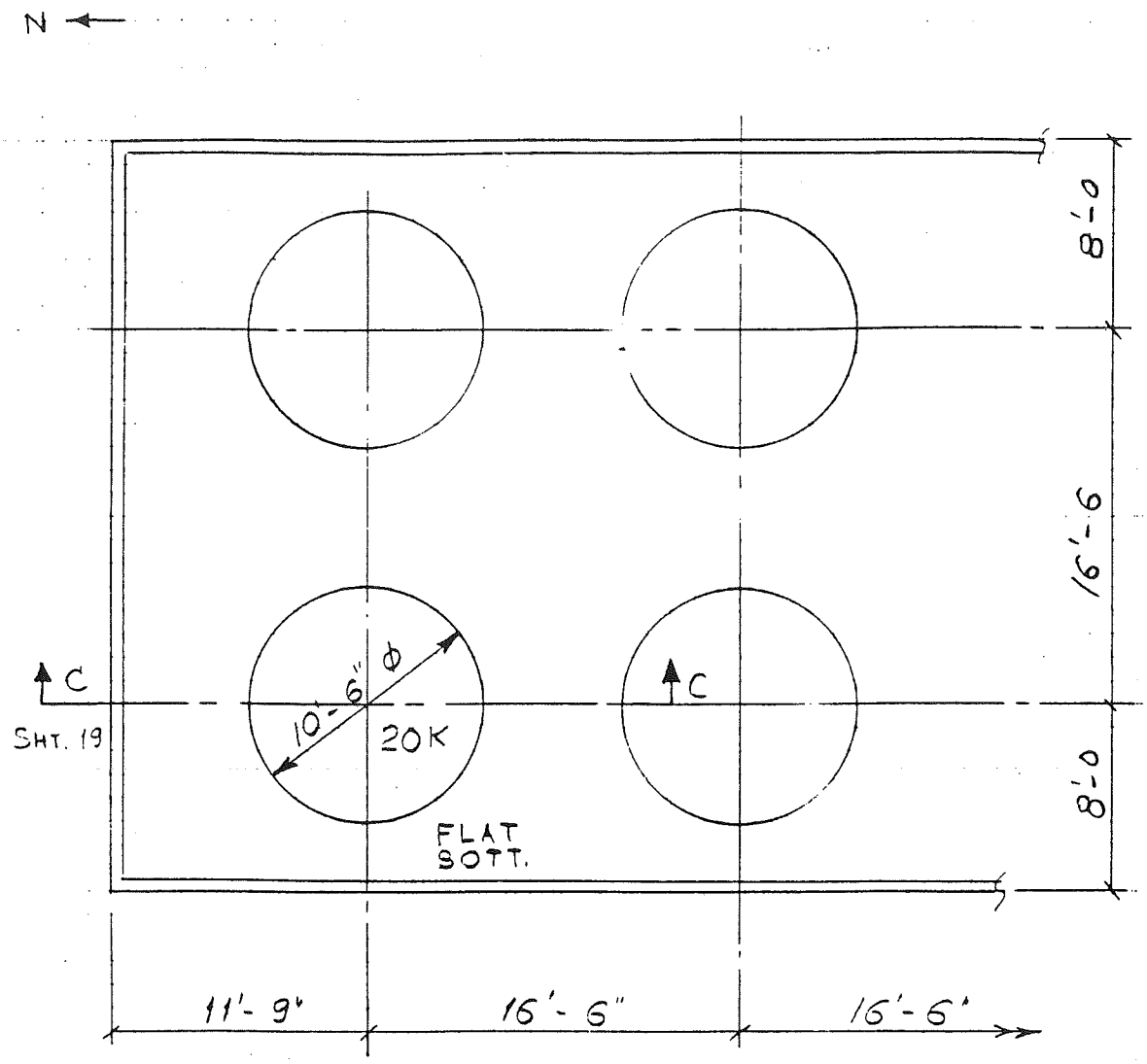

PARTIAL PLAN
OF TANK FARM No. 4

HOYER-SCHLESINGER-TURNER, INC.

SHEET 18 OF 41
PROJECT NO. 1731-3
DATE 9.25.90
BY INS

PROJECT S HEBRON, OHIO

SUBJECT EXIST. TANK FARM NO 4

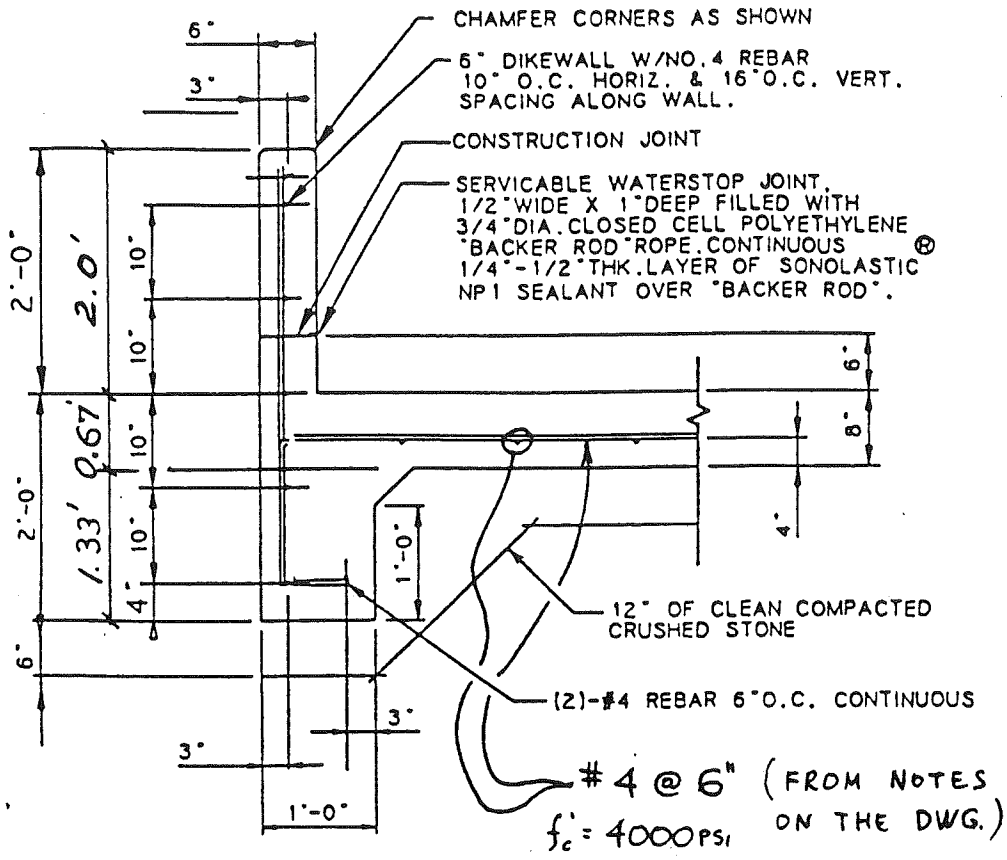

S-K DWG. 90-64200-508 REV. 1

EXIBIT No. 33

SECTION ~~A-A~~

NO ~~SCALE~~ 3/4" = 1'-0"

THIS SECTION IS TYPICAL FOR T. FARM No. 4

THE SOIL PRESSURE UNDER SINGLE 20K TANK IS 3.33 KSF (IDENTICAL TO T.F. #1, SHT. 9)

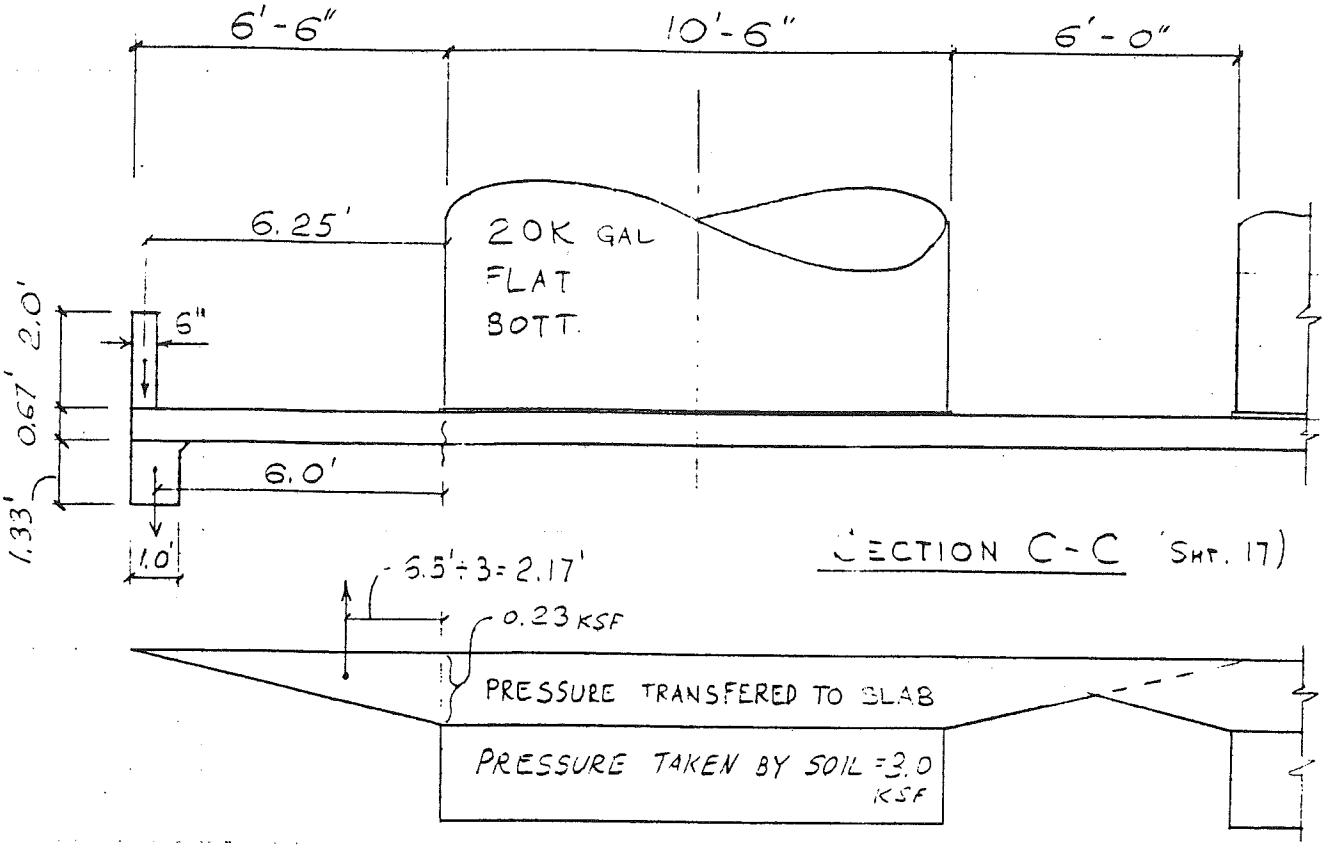

SIMILAR TO CALC. ON SHT. 14 UPLIFT SOIL PRESSURE WITHOUT SLAB ITSELF IS 0.23 KSF

CONSIDER THE LONGEST 6'-6" CANTILEVER

$$M_{CANT.} = \frac{5.5'}{2} \times 0.23\ KSF \times 1.0'\ STRIP \times 2.17' - \underset{DIKE}{2.0' \times 0.5' \times} \times 1.0'\ STRIP \times 0.15\ K/CF \times 6.25' - \underset{SKIRT}{1.0' \times 1.33'} \times \underset{STRIP}{1.0'} \times 5.0' \times 0.15\ K/CF =$$

$$= 1.62'^{K} - 0.34'^{K} - 1.20'^{K} = -0.52'^{K}$$

THE NEGATIVE SIGN SHOWS THAT MOMENT

FROM UPWARD SOIL PRESSURE TRANSFERRED TO SLAB IS LESS, THAN MOMENT FROM DIKE AND CONCRETE SKIRT. WEIGHT OF SKIRT AND DIKE IS TAKEN BY SOIL UNDER THE SKIRT. SEE FOLLOWING PRESSURE CALC.

$$\underbrace{(2' \times 0.5')}_{\text{DIKE}} + \underbrace{1.33 \times 1.0'}_{\text{SKIRT}})\, 0.15^{K}/_{C.F} \div \underbrace{(1.0' \times 1.0')}_{\text{SKIRT STRIP}} = 0.35\,\text{KSF} \ll \underbrace{3.0\,\text{KSF}}_{\text{ALLOW.}}$$

UPWARD PRESSURE WAS CONSERVATIVELY NEGLECTED.

SAY: REINF. #4 @ 6" AND 8" SLAB ARE ADEQUATE IN 6'-6 CANTILEVER.

OK

CHECK 5.0' SPAN SLAB BETWEEN TWO TANKS

ASSUME PRESSURE DIAGRAM IS HORIZONTAL AND THE PRESSURE IS 0.23 KSF (UPLIFT)

PER 1'-0" WIDE STRIP BEAM

$$M = \frac{wl^2}{16} = \frac{0.23^{K}/_{1} \times 5.0^2}{16} = 0.52'^{K}$$

EFFECTIVE DEPTH IS $d = 4"$

$$A_s = \frac{0.52'^{K}}{1.75\,(4")} = 0.07\,\text{IN}^2 < 0.40\,\text{IN}^2 \quad (\text{EXIST. } \#4 @ 6")$$

OK THE 8" SLAB WITH #4 @ 6" IS ADEQUATE.

HOYER-SCHLESINGER-TURNER, INC.

SHEET 21 OF 41
PROJECT NO. 1731-1
DATE 9.27.90
BY INS

PROJECT HEBRON, OHIO

SUBJECT EXIST. TANK FARM No. 4 DESIGN CHECK

THE TANK FARM No. 4 SLAB AND REINFORCEMENT IS ADEQUATE FOR 20K (SHTS. 19, 20).
BY INSPECTION IT WILL BE QUITE ADEQUATE FOR SMALLER TANKS 8K & 10K GAL. WITH FLAT BOTTOM.

THE TANK FARM No. 4 ALSO HAS A FEW TANKS 15K GAL. WITH CONE BOTTOM. REFERRING TO SHTS. 10 AND 16 WE CAN SEE THAT THE 8" SLAB WITH #4 @ 6" IS ADEQUATE.

SAY: OK

HOYER-SCHLESINGER-TURNER, INC.

PROJECT 5 HEBRON, OHIO

SUBJECT PROPOSED TANK FARM No. 5

SHEET 22 OF 41
PROJECT NO. 1231-
DATE 3.25.90
BY INS

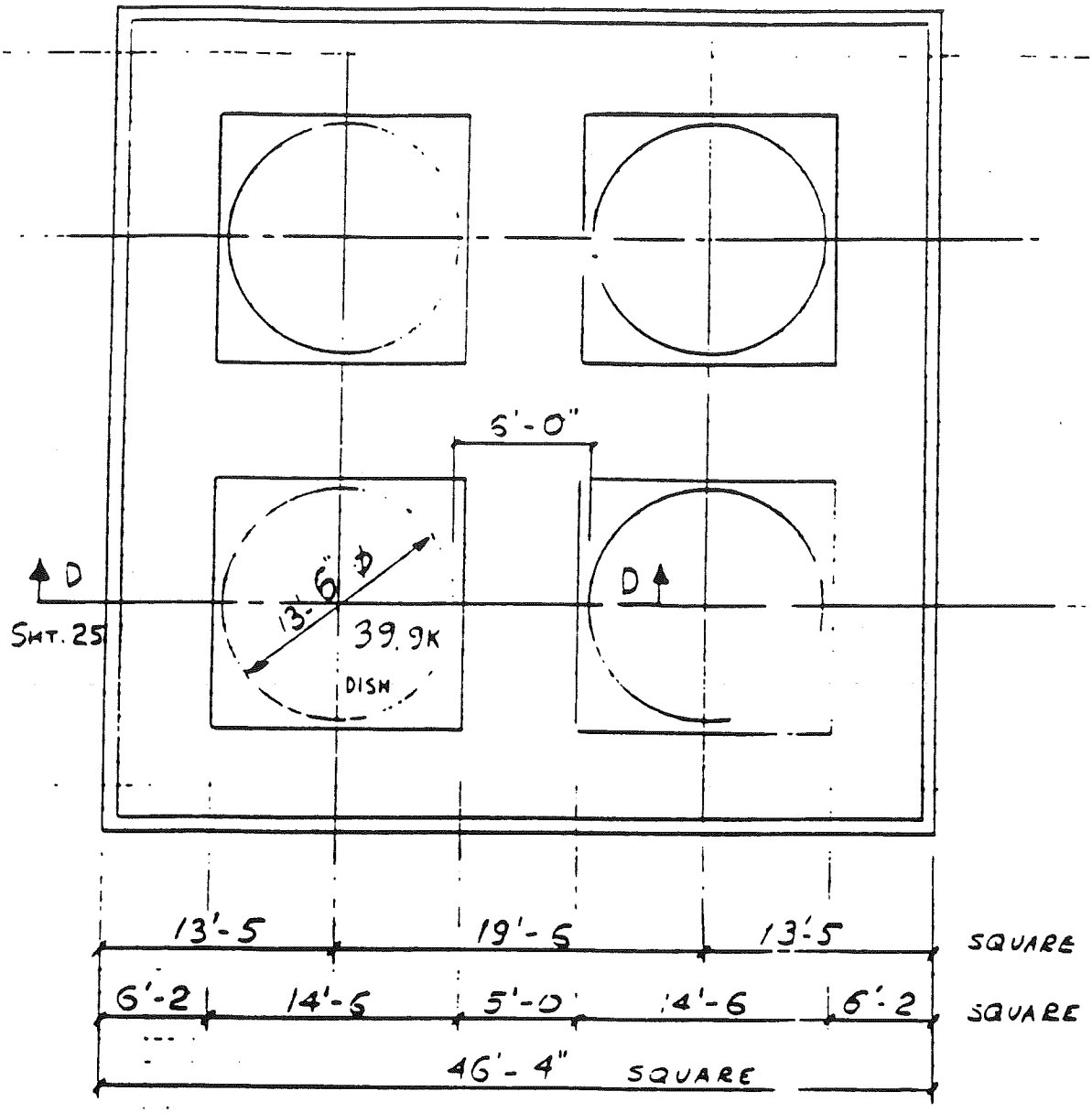

TANK FARM No 5

HOYER-SCHLESINGER-TURNER, INC.

PROJECT 5 HEBRON, OHIO

SUBJECT PROPOSED TANK FARM No. 5

SHEET 23 OF 41
PROJECT NO. 1731-3
DATE 9.25.90
BY INS

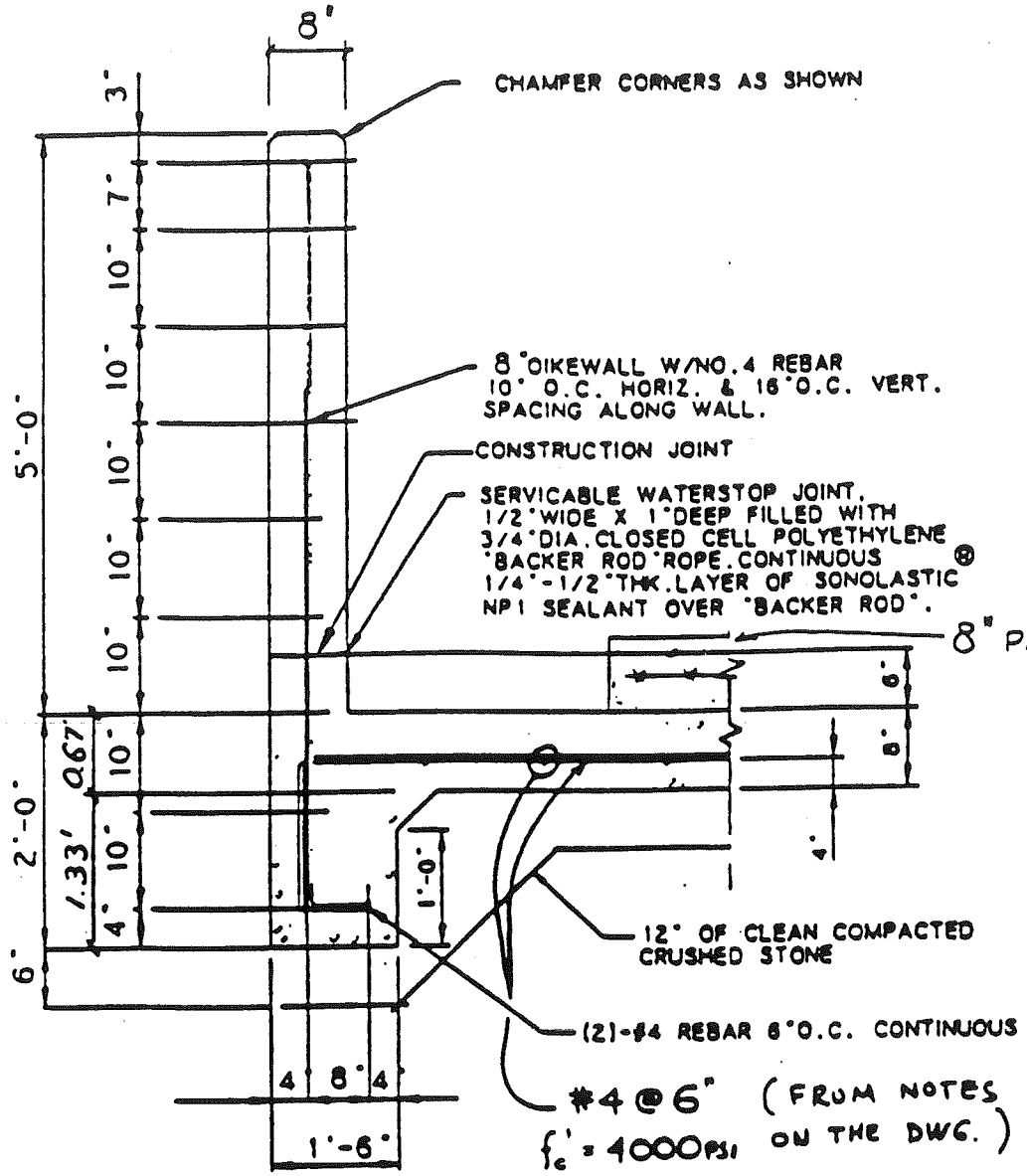

S-K DWG. 90-64200-509 REV. 1
EXIBIT. No. 34

THIS SECTION IS TYPICAL FOR TANK FARM No. 5

39.9 K GAL TANK, DISH BOTT., 13'-6" Ø

TANK HT. ≈ 39900 GAL × 0.1337 CUF/GAL ÷ $\left(\frac{\pi \times 13.5^2}{4}\right)$ = 37.27'

TANK SELFWT ≈ π (13.5' × 37.27' + 13.5² $\frac{1}{4}$ × 2) × 10.2 PSF × 1.06 =
SHELL TOP & BOTT. 1/4 PL MISC

= 20.19 K

LIQUID WEIGHT ≈ 39900 GAL × 8.336 #/GAL × 1.6 SP. GRAV = 532.17 K

TOTAL TANK WT 552.36 K

SOIL PRESSURE UNDER SINGLE TANK IS TO BE FOUND. CONSERVATIVELY ASSUME THAT PRESSURE IS TRANSFERRED THRU 8" THICK 14'-6" DIAMETER PAD TO 8" SLAB.

PAD PRESSURE TRANSFERRING AREA = $\pi\left(\frac{14.5'}{2}\right)^2$ = 165.1 SF

CONCRETE PAD WT = 2.67' × 165.1 SF × 0.15 K/CF = 16.50 K
CONC. SLAB WT = — " — 15.60 K

TOTAL WT. OF TANK & CONCRETE 535.26 K

SOIL PRESSURE = 535.26 K ÷ 165.1 SF = 3.54 KSF > 3.0 KSF

∴ SOIL PRESSURE UNDER THE TANK IS HIGHER THAN ASSUMED MINIMUM SOIL BEARING CAPACITY.
THE REMAINDER IS TRANSFERRED TO PARTS OF SLAB OUTSIDE OF THE TANK AND THAT TAKES CARE OF THE SOIL COMPRESSION AND SETTLEMENT.

UPLIFT SOIL PRESSURE WHICH IS NOT TAKEN BY SOIL UNDER TANK IS

3.54 KSF − 3.0 KSF = 0.54 KSF

CONSIDER CANTILEVER WITH UPLIFT SOIL PRESSURE

THE SOIL PRESSURE UNDER SINGLE 39.9K TANK IS 3.54 KSF

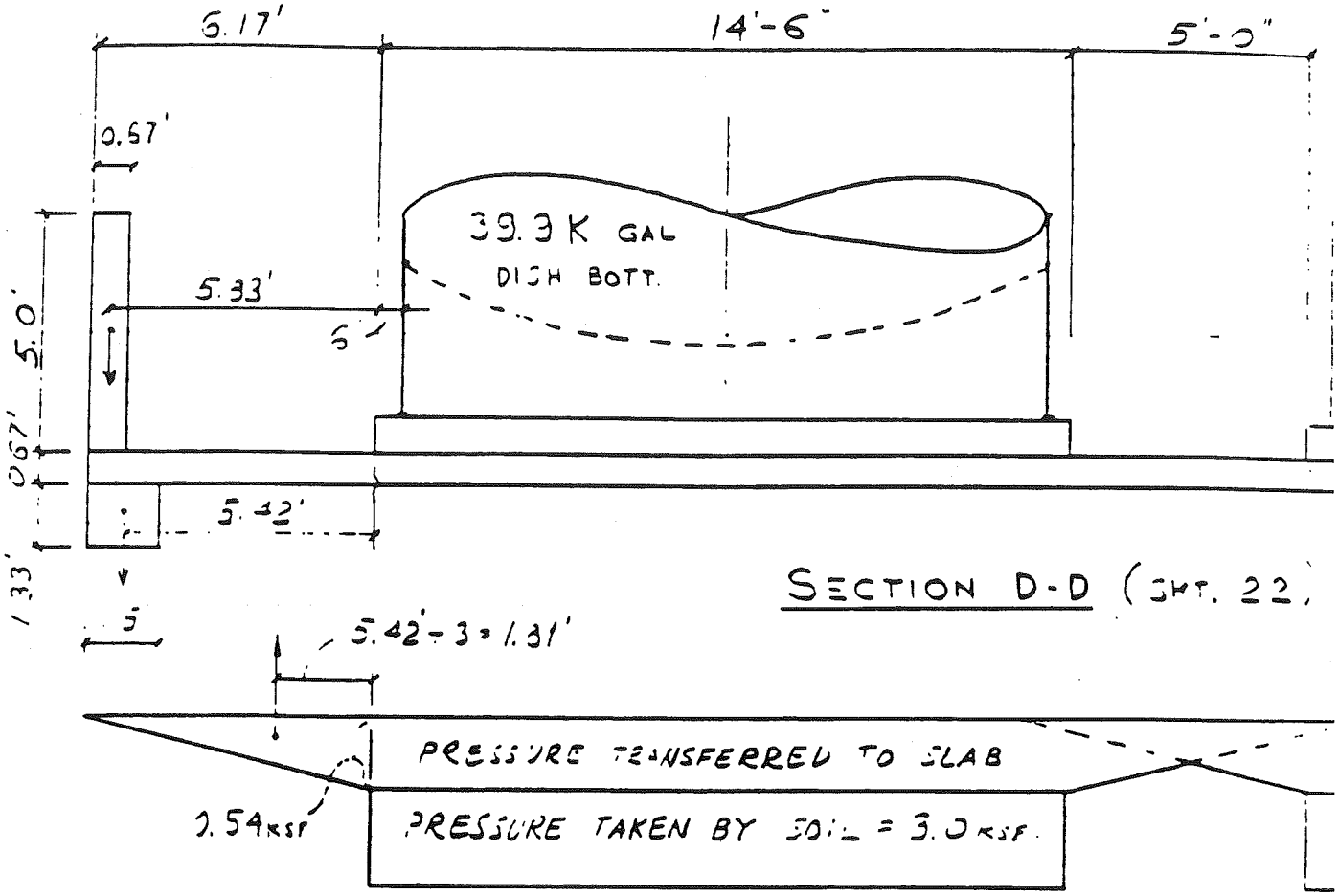

CHECK 6.17' CANTILEVER

$$M_{CANT} = \frac{6.17'}{2} \times 0.54\,KSF \times 1.0\,STRIP \times 1.3' - \underset{DIKE}{5.0'} \times 0.67' \times \underset{STRIP}{1.0'} \times 0.15\,K/CF \times 5.33$$

$$- \underset{CONC.}{1.33'} \times \underset{SKIRT}{1.5'} \times \underset{STRIP}{1.0'} \times 5.42' \times 0.15\,K/CF =$$

$$= 3.0'^K - 2.33'^K - 1.62'^K = -1.55'^K$$

THE NEGATIVE SIGN OF THE MOMENT SHOWS THAT MOMENT FROM UPWARD SOIL PRESSURE TRANSFERRED TO SLAB

IS LESS THAN MOMENT FROM DIKE AND CONCRETE SKIRT. WEIGHT OF SKIRT AND DIKE IS TAKEN BY THE SOIL UNDER THE SKIRT. SEE FOLLOWING PRESSURE CALC.

$$\left(\underset{\text{DIKE}}{5' \times 0.67'} + \underset{\text{SKIRT}}{1.33' \times 1.5'}, 0.15\ \text{k/cf}\right) \div \left(\underset{\text{SKIRT}}{1.5'} \times \underset{\text{STRIP}}{1.0'}\right) = 0.53\ \text{KSF} \ll \underset{\text{ALLOW.}}{3.0\ \text{KSF}}$$

UPWARD PRESSURE WAS CONSERVATIVELY NEGLECTED.

SAY REINF #4 @ 5" AND 8" SLAB ARE ADEQUATE U ≤ 17' CANTILEVER.

OK

CHECK 5.0' SPAN SLAB BTWN TWO TANKS

ASSUME PRESSURE DIAGRAM IS HORIZONTAL AND THE PRESSURE IS 0.54 KSF (UPLIFT)

PER 1'-0" WIDE STRIP BEAM

$$M = \frac{wl^2}{15} = \frac{0.54\ \text{KSF} \times 5.0^2}{15} = 0.84'$$

EFFECTIVE DEPTH IS $d = 4"$

$$A_s = \frac{0.84'^k}{1.75(4")} = 0.12\ \text{IN}^2 < 0.20\ \text{IN}^2 \quad (\text{EXIST. } \#4 @ 6")$$

OK, THE 8" SLAB WITH #4 @ 5" IS ADEQUATE

REF TO SHT. 10 WE CAN SEE THAT 20K TANK SKIRT ALLOWABLE SHEAR $V_c = 32.2^k > 8.5^k$ LOAD PER 1' OF PERIMETER

FOR 39.9 K TANK TOTAL CONCRETE THICKNES IS 8" SLAB + 8" PAD = 16".

BY INSPECTION SAY. OK

HOYER-SCHLESINGER-TURNER, INC.

PROJECT: HEBRON, OHIO

SUBJECT: EXIST. TANK FARM No. 6 DESIGN CHECK

SHEET 27 OF 41
PROJECT NO. 1731-3
DATE 9.27.90
BY INS

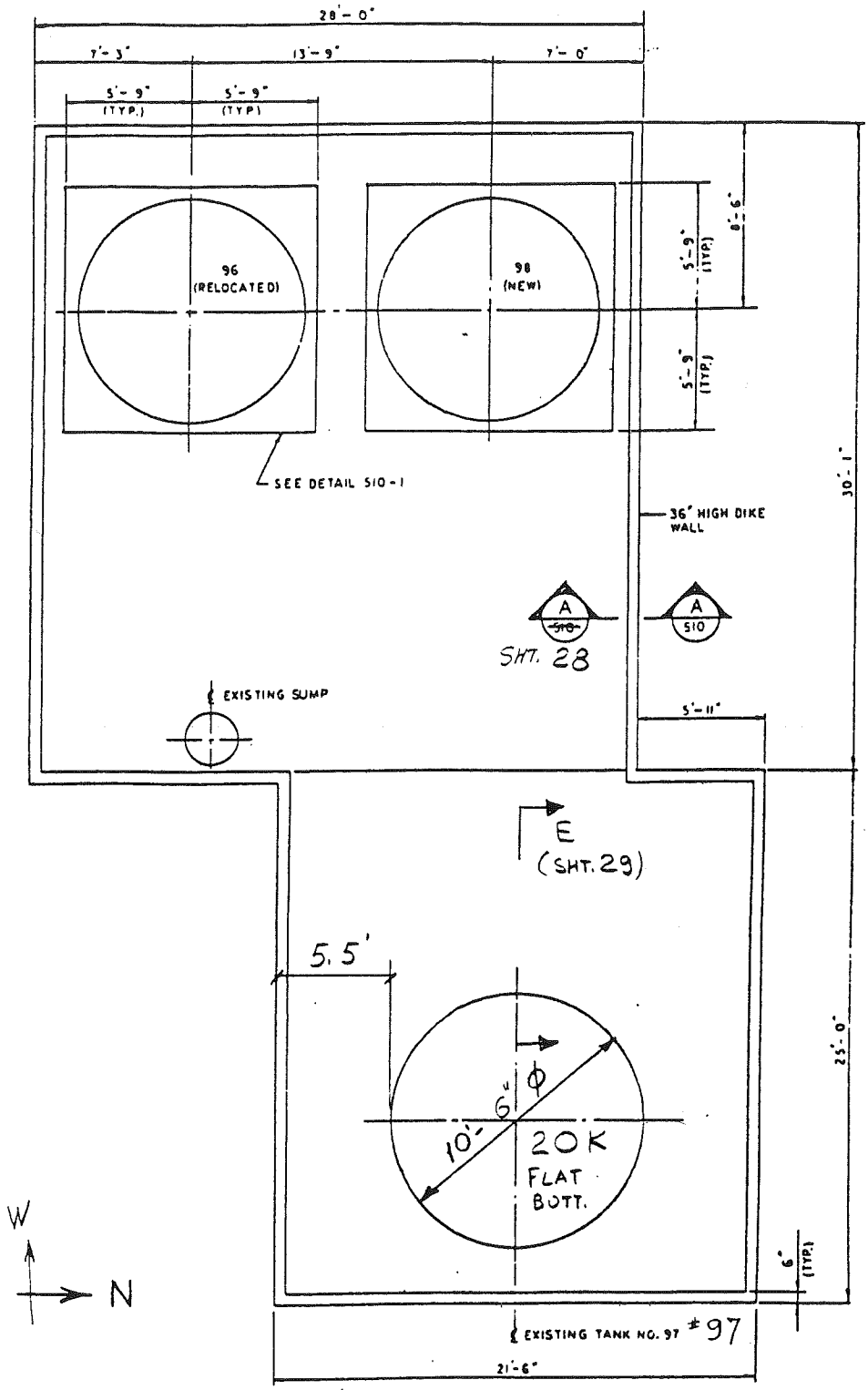

TANK FARM No 6 (AS PER DWG. 90-64200-001 REV. 2)

HOYER-SCHLESINGER-TURNER, INC.

SHEET 28 OF 41
PROJECT NO. 1731-3
DATE 9.27.90
BY INS

PROJECT 8 HEBRON, OHIO

SUBJECT EXIST. TANK FARM No. 6 DESIGN CHECK

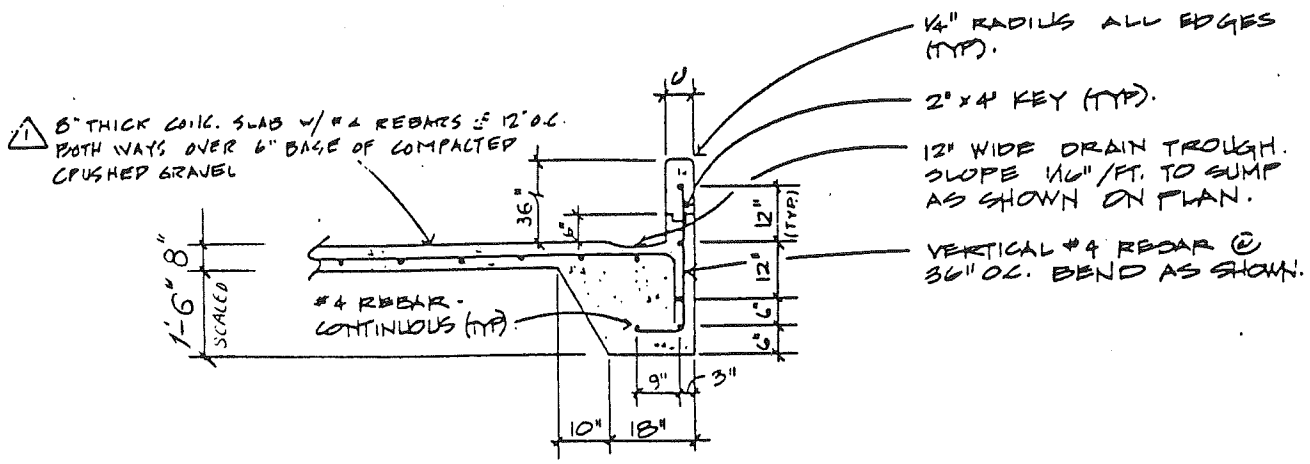

SECTION "A-A" (SHT. 27)
36" HT. DIKE DTL.
SCALE: 1/2" = 1'-0"

THIS SECTION IS TYPICAL FOR T. FARM No. 6

THE CRITICAL TANK IS No. 97, LONGEST SLAB CANTILEVER IS 5.5' IN N-S DIRECTION.

COMPARING WITH SHTS. 14 AND 19 WE CAN SEE THAT 20K GAL. FLAT BOTT. TANK CREATES TOTAL PRESSURE ON SOIL EQUAL 3.33 KSF.
PRESSURE TRANSFERRED TO THE SLAB IS 0.23 KSF
BY INSPECTION, SAY: OK

THE PRESSURE OF 0.23 KSF IN WEST DIRECTION WILL BE TAKEN BY THE SLAB.
CONSERVATIVELY ASSUME THAT PRESSURE ON SLAB WILL BE UP TO 5.5' BEYOND THE EDGE OF THE TANK.

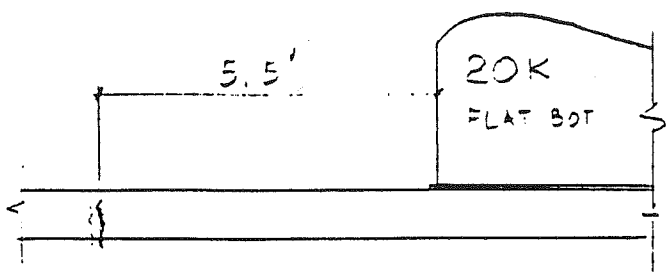

SECTION E-E (SHT 27)

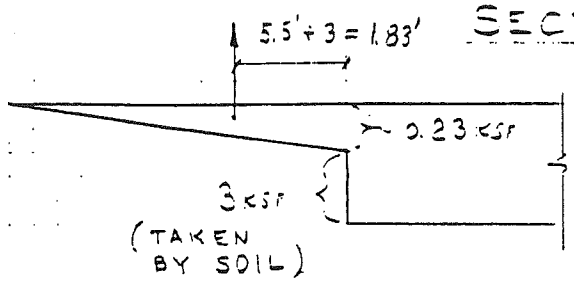

CONSERVATIVELY ASSUME CANTILEVER ACTION OF THE SLAB.

$$M_{CANT} = \frac{5.5'}{2} \times 0.23\,KSF \times 1.0'_{STRIP} \times 1.83' =$$

$$= 1.16'^{K}$$

PROJECT S HEBRON OHIO

SUBJECT EXIST. TANK FARM No. 6 DESIGN CHECK

EFFECTIVE SLAB DEPTH $d = 4''$

$$A_s = \frac{1.16^{1/2}}{1.75(4'')} = 0.16 \text{ in}^2 < 0.20 \text{ in}^2 \text{ (EXIST. \#4 @ 12")}$$

EXIST. 8" SLAB WITH #4 @ 12" E.W. IS ADEQUATE

OK

HOYER-SCHLESINGER-TURNER, INC.

SHEET 31 OF 41
PROJECT NO. 1731-3
DATE 9.28.90
BY INS

PROJECT S HEBRON, OHIO

SUBJECT EXIST. CONTAINER STORAGE No. 1

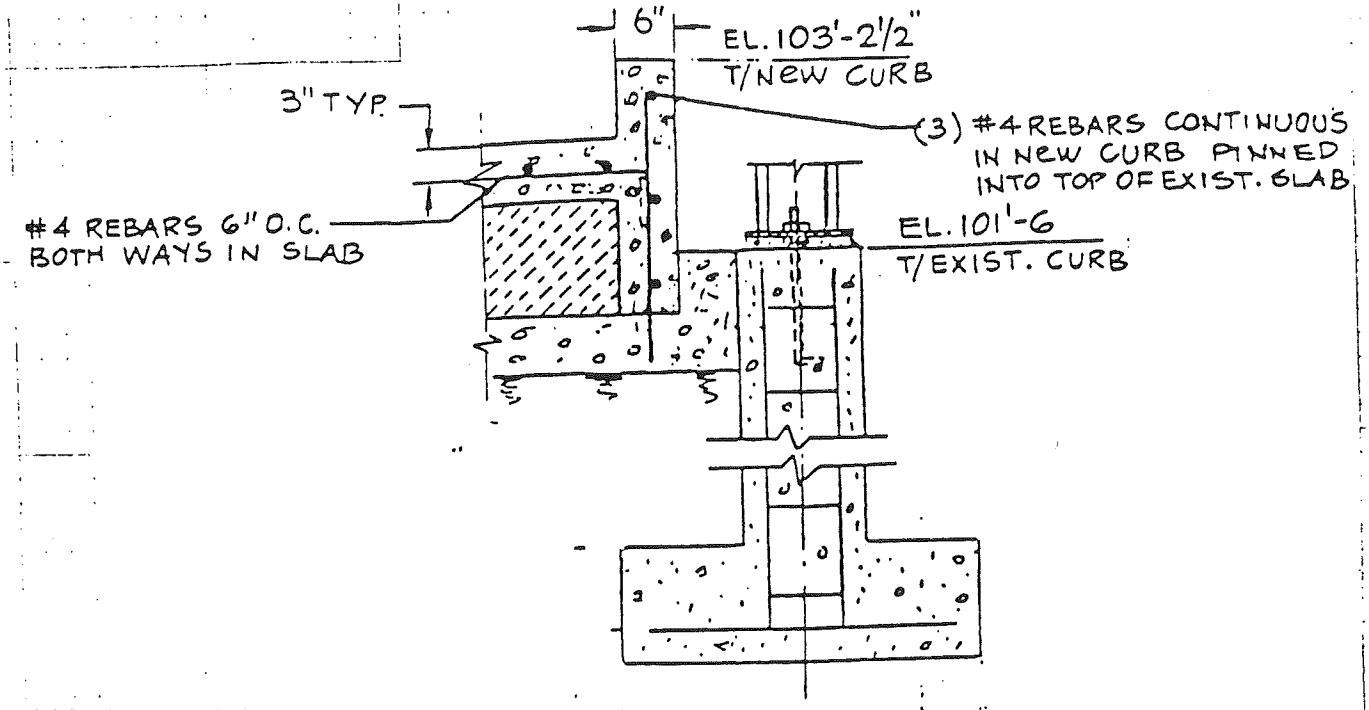

SECTION Q-525

NO ~~SCALE~~: 3/4" = 1'-0"

THIS IS A DETAIL FROM DWG No. 90-64200-525, REV. 1 (EXIBIT 23A)

CONTAINER STORAGE No. 1

S

HOYER-SCHLESINGER-TURNER, INC.

SHEET 32 OF 41
PROJECT NO. 1731-
DATE 9.28.90
BY INS

PROJECT S HEBRON, OHIO

SUBJECT PROPOSED CONTAINER STORAGE No. 3

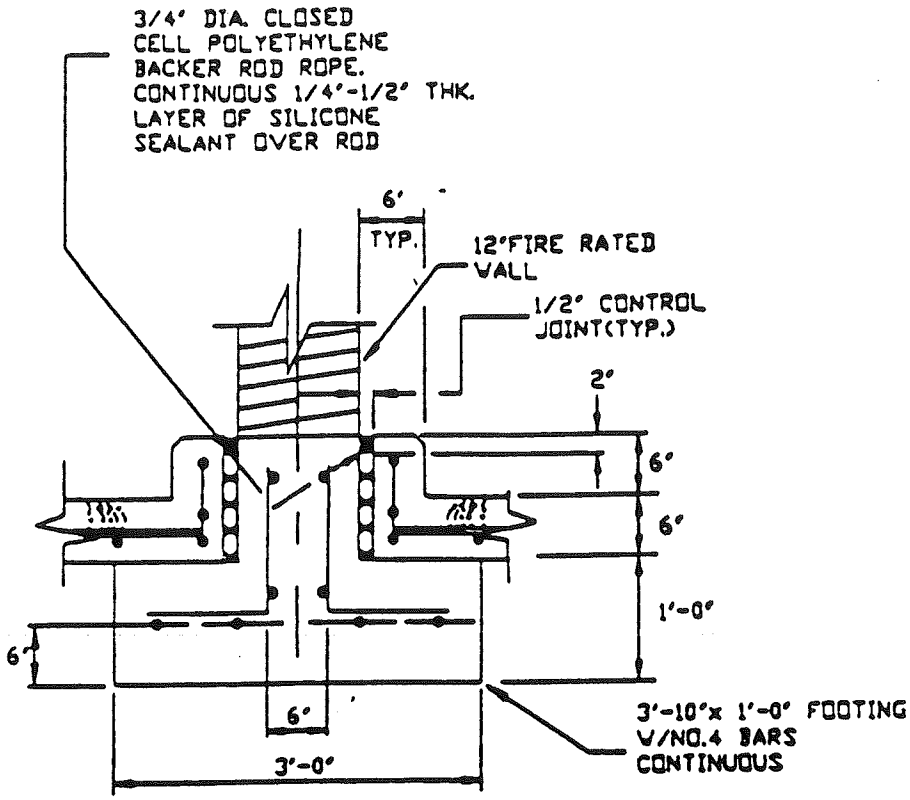

SEBTION "B-B"

THIS IS A DETAIL FROM DRAWING No. 39-64200-528 REV. 1

(EXIBIT No. 25A, S)

CONTAINER STORAGE No. 3

6" SLAB REINFORCED WITH #4 @ 12" EACH WAY (ASSUMED CONSERVATIVELY)

CHECK CAPACITY OF 6" SLAB WITH #4 @ 12" EA WAY

REF TO PCA PUBLICATION "CONCRETE FLOORS ON GROUND" 1983.

TO FIGURE OUT LIFT TRUCK CAPACITY, ASSUME 4 — 55 GAL. DRUMS

THE TOTAL LOAD ≈ $4 \times 55 \text{ GAL} \times 8.33 \frac{\#}{\text{GAL}} \times \underset{\text{SPEC GRAV.}}{1.6} + \underset{\text{SELF WT}}{4 \times 30^{\#}} =$

$= 2934^{\#} + 120^{\#} = 3054 \text{ LB}$

FROM P. 10 OF THE PCA PUBLICATION CONSERVATIVELY TAKE RATED LIFT TRUCK CAPACITY 4000 LB

LOAD ON DRIVE AXLE WILL BE 10.4K
WHEEL SPACING 31"
NUMBER OF WHEELS - 2
COMMON TIRE INFLATION PRESSURE 110 PSI

TIRE CONTACT AREA:

$$\frac{\text{WHEEL LOAD}}{\text{INFL. PRESSURE}} = \frac{10{,}400^{\#} \div 2}{110 \text{ PSI}} = 47.3 \text{ IN}^2$$

SUBGRADE MODULUS K = 100 AS PER PAGE 6
IT WILL BE CONSERVATIVE

FROM TABLE 3 ON P 3 FOR $f_c' = 3500$ PSI FLEXURAL STRENGTH WILL BE 540 PSI (MR)

FOR FREQUENT OPERATIONS OF FORKLIFT TRUCKS SELECT A SAFETY FACTOR PERMITTING UNLIMITED STRESS REPETITIONS - 2.0

HOYER-SCHLESINGER-TURNER, INC.

SHEET 34 OF 41
PROJECT NO. 1771-3
DATE 3.23.93
BY EVS

PROJECT S HEBRON, OHIO

SUBJECT CONTAINER STORAGES NO 1 & NO 3
DESIGN CHECK

CONCRETE WORKING STRESS

$$WS = \frac{MR}{SF} = \frac{540}{2.0} = 320 \text{ PSI}$$

SLAB STRESS PER 1000 lb OF AXLE LOAD:

$$\frac{WS}{\text{AXLE LOAD}} = \frac{320 \text{ PSI}}{10.4 \text{ K}} = 30.8 \text{ PSI PER } 1000 \text{ lb}$$

GO TO FIG. 5 OF PCA PUBLICATION (NEXT SHT. 35)

ENTER SLAB STRESS OF 30.8 PSI AT LEFT, MOVE RIGHT TO CONTACT AREA OF 47.3 SQ. IN., DOWN TO WHEEL SPACING OF 31". THEN RIGHT TO READ A SLAB THICKNESS OF 5.1 IN ON SUBGRADE k OF 100 PCI

EXIST SLAB THICKNES 5" > 5.1 OK

FROM P 21 OF PCA

REINFORCEMENT $A_s = \frac{FLw}{2 f_s} = \frac{1.5 \times 15' \times 5'' \times 12.5}{2 \times 20000} = 0.035 \text{ in}^2$

= # 12', A = 0.2 in² > 0.035 in² OK

THE SLAB IS ADEQUATE

HOYER-SCHLESINGER-TURNER, INC.

PROJECT HEBRON, OHIO

SUBJECT EXIST. CONTAINER STORAGES

SHEET 35 OF 41
PROJECT NO. 1731-3
DATE 9.28.90
BY INS

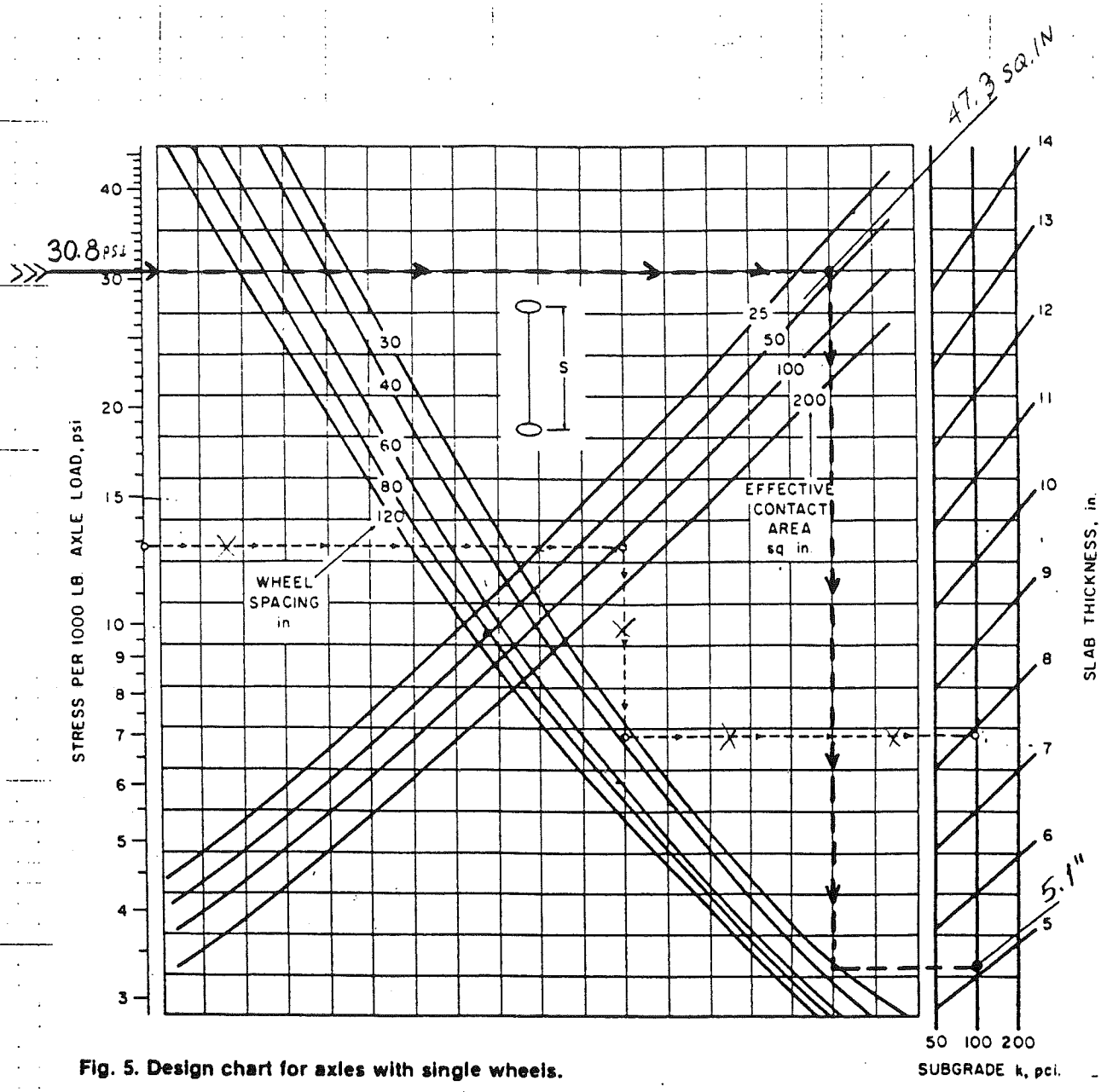

Fig. 5. Design chart for axles with single wheels.

FROM P. 11 OF PORTLAND CEMENT ASSOCIATION PUBLICATION "CONCRETE FLOORS ON GROUND" 1983

HOYER-SCHLESINGER-TURNER, INC.

PROJECT S HEBRON, OHIO

SUBJECT EXIST. CONTAINER STORAGE No. 2

SHEET 35 OF 41
PROJECT NO. 1731-3
DATE 9.23.90
BY INS

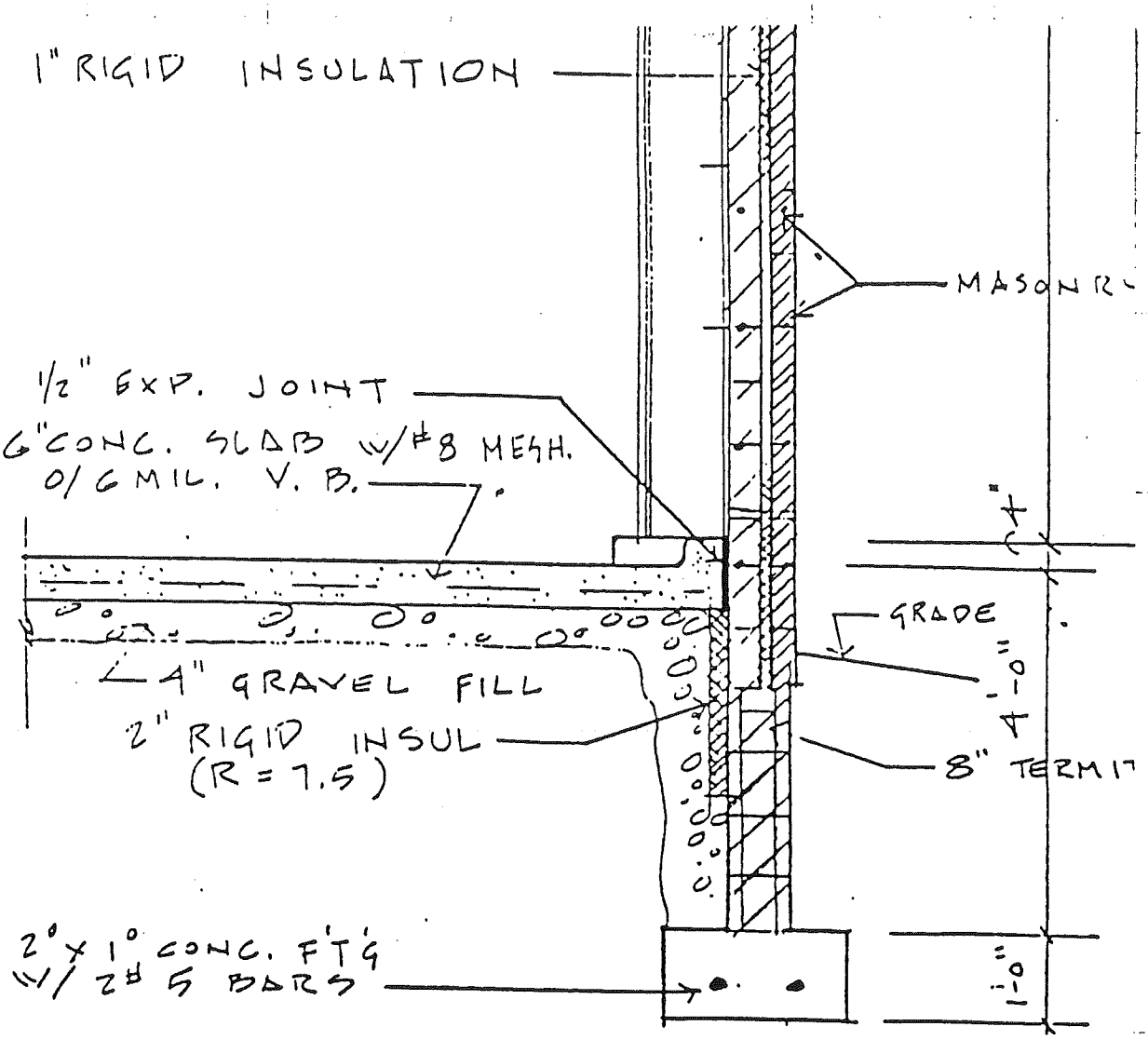

SECTION A-A

FROM S DWG 90-64200-527 REV. 0

6" CONC. SLAB W/ #8 MESH - AN OLD DESIGNATION, MOST LIKELY WWF 6 × 6 - 8 × 8. THE NEW DESIGNATION IS WWF 6 × 6 - W2 × W2

STEEL AREA IS 0.04 IN^2/FT. IN EITHER DIRECTION

(REF. TO CRSI MANUAL, 1986)

HOYER-SCHLESINGER-TURNER, INC.

PROJECT S HEBRON, OHIO

SUBJECT EXIST. CONTAINER STORAGE No. 2

SHEET 37 OF 41
PROJECT NO. 1731-3
DATE 9.28.90
BY INS

6" CONC. SLAB WITH REINFORCEMENT OF 0.04 in^2/FT IN BOTH DIRECTION CAN BE COMPARED WITH 6" SLABS FOR STORAGES No. 1 & No. 3 (SEE SHT. 34)

BY INSPECTION SAY OK

$A_s = 0.035 in^2 < 0.04 in^2$ IN STORAGE No. 2 SLAB. OK

HOYER-SCHLESINGER-TURNER, INC.

SHEET 38 OF 41
PROJECT NO. 1731-3
DATE 9.28.90
BY INS

PROJECT S HEBRON

SUBJECT EXIST. TRUCK STATIONS Nos. 1, 2, 4, 5, 7, 8 & 9
DESIGN CHECK

TRUCK STATIONS No. 1

SAFETY-KLEEN DWG 90-64200-531 REV. N/A

6" SLAB WITH #4 @ 12" BOTH WAYS IN MID. THICK

TRUCK STATION No. 2

S-K DWG. 90-64200-533 REV. 0

6" SLAB #4 @ 12" BOTH WAYS IN MID. THICK

TRUCK STATION No. 4

S-K DWG. 90-64200-535 REV 0

6" SLAB #4 @ 12" (MOST LIKELY)

TRUCK STATION No 5

S-K DWG. 90-64200-536 REV. 0

10" SLAB #4 @ 10" EACH WAY IN MIDDLE

TRUCK STATION No. 7

S-K DWG 90-64200-537(3) REV. 0

6" SLAB #4 @ 12" BOTH WAYS, 2" CLR AT BOTT.

TRUCK STATIONS No. 8, No 9

S-K DWG. 90-64200-533 REV. 0

12" SLAB #4 @ 10" EA. WAY TOP & BOTT.

PROJECT S HEBRON, OHIO

SUBJECT EXIST. TRUCK STATIONS No's 1, 2, 4, 5, 7, 8 & 9
DESIGN CHECK

REFERING TO ACI STANDARD PRACTICE FOR DESIGN OF CONCRETE PAVEMENTS ACI-325.58.

DESIGN LOAD IS 16000 LB INCLUDING 20% IMPACT.

THE CENTER-TO-CENTER SPACING OF TWO TIRES IS 15.6".

THE TIRE PRESSURE IS 75 PSI

THE SUBGRADE MODULUS $K = 200\ \#/IN^3$

SAFETY FACTOR = 2.0

MODULUS OF RUPTURE IS 700 AT 28 DAY

USING THE DESIGN CHART A 401(a) - SEE NEXT SHT. 40

SLAB THICKNES IS 6". OK

REF TO P. 41 OF ACI-325.58

REINFORCEMENT AREA

$$A_s = \frac{FLW}{2 f_s} = \frac{1.5 \times 40' \times 125}{2 \times 24000} = 0.15\ IN^2$$

MIN. REINF. IN SLABS IS #4 @ 12", $A = 0.20 > 0.16\ IN^2$

OK

HOYER-SCHLESINGER-TURNER, INC.

PROJECT: HEBRON, OHIO

SUBJECT: EXIST. TRUCK STATIONS No's 1,2,4,5,7,8 & 9

SHEET 40 OF 41
PROJECT NO. 1731-3
DATE 9.28.90
BY INS

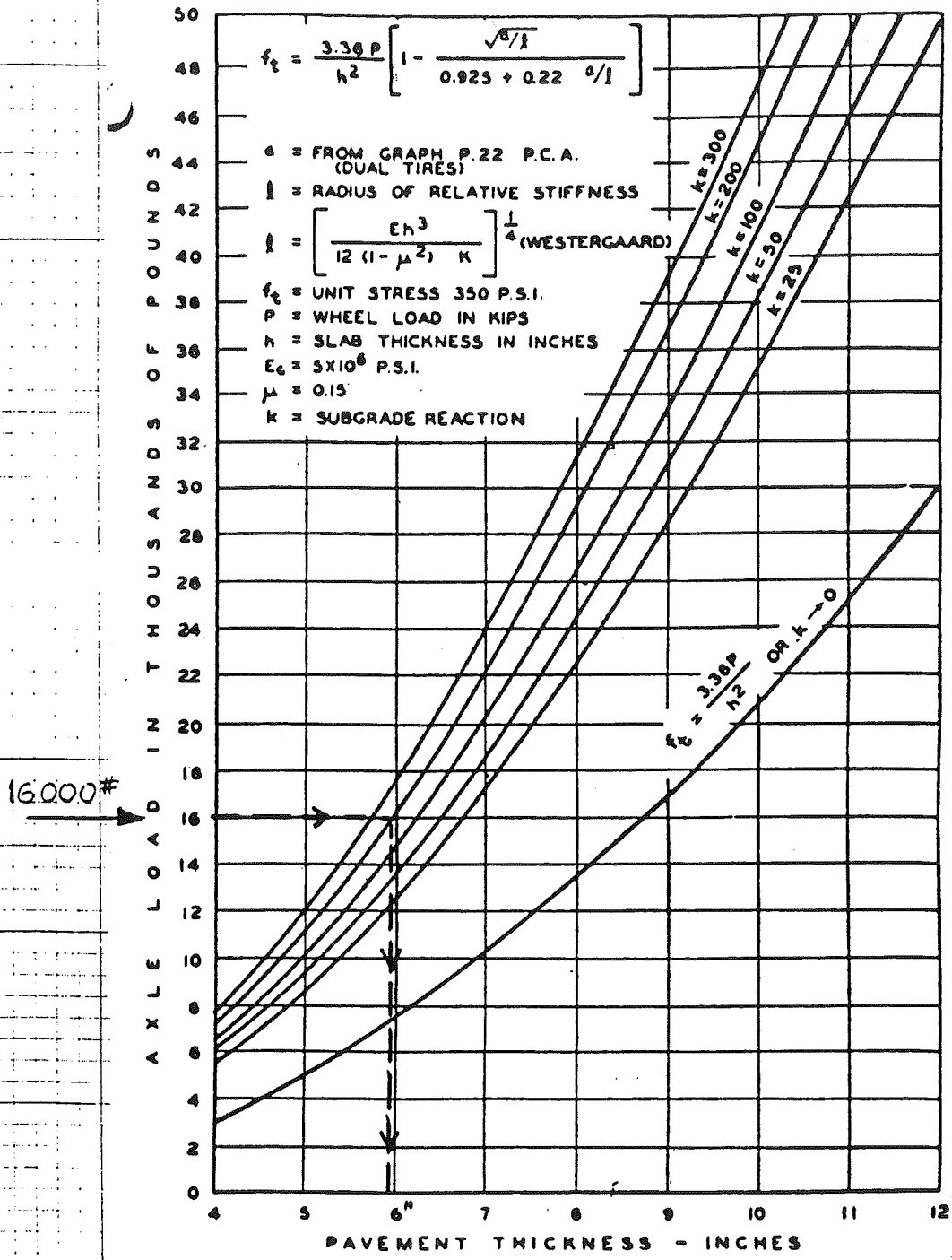

Fig. A401(a)—Design chart based on Eq. (10) for portland cement concrete pavements —protected corners*

THIS CHART IS FROM ACI 325.58

HOYER-SCHLESINGER-TURNER, INC.

PROJECT S HEBRON, OHIO

SUBJECT BIBLIOGRAPHY

SHEET 41 OF 41
PROJECT NO. 1731-3
DATE 9.28.90
BY INS

1. THE BOCA NATIONAL BUILDING CODE 1987
2. AMERICAN NATIONAL STANDARD CODE 1988
3. BUILDING CODE REQUIREMENTS FOR REINFORCED CONCRETE (ACI 318-89) AND COMMENTARY (ACI 318R-89)
4. CONCRETE REINFORCING STEEL INSTITUTE MANUAL OF STANDARD PRACTICE 1986
5. ACI STANDARD RECOMMENDED PRACTICE FOR DESIGN OF CONCRETE PAVEMENTS (ACI 325.58)
6. PORTLAND CEMENT ASSOCIATION PUBLICATION CONCRETE FLOORS ON GROUND 1983
7. R.B. PECK & OTHERS FOUNDATION ENGINEERING 1974
8. H. PARKER SIMPLIFIED ENGINEERING 1975

PREPARED FOR:
SAFETY-KLEEN CORPORATION
PAVING PROJECT
HEBRON, OHIO
CTL PROJECT NO. 86-5146
September 30, 1986

CTL ENGINEERING

CTL ENGINEERING INC.
CONSULTING ENGINEERS
TESTING • INSPECTION
LABORATORY SERVICES
2860 Fisher Road • Columbus, Ohio 43204 • 614-276-8123

C.K. Satyapriya, M.S., P.E.
President

Gary R. Cattel, P.E.
Vice President

L. Gregory DuBois, P.E.
Vice President

September 30, 1986

Safety-Kleen Corporation
777 Big Timber Road
Elgin, Illinois 60120

ATTENTION: Mr. James L. Bishop

REFERENCE: Paving Project
Hebron Recycle Center
Hebron, Ohio
CTL Project No. 86-5146

Dear Mr. Bishop:

In accordance with your request, we have performed a soils exploration on the site of the above referenced project. A total of 5 test borings were made at approximate locations as shown on the enclosed plan. The borings were drilled to depths ranging between 10 and 15 feet below the existing ground surface. Enclosed are the results of this investigation together with our recommendations which can be found on pages 4 through 9.

CTL Engineering, Inc., has prepared this report for your use for design purposes in accordance with generally accepted soil and foundation engineering practices. Specifications, analysis and recommendations and other work product of CTL Engineering, Inc., are instruments of service for this project only. Reuse of any of the instruments of service by the owner on extensions of this project or on any other project without the written permission of CTL Engineering, Inc., shall be at the owners risk and the owner agrees to defend, indemnify and hold harmless from all claims, damages, and expenses including attorneys' fees arising out of such unauthorized reuse by the owner or by others acting through the owner.

Soil samples will be retained in our laboratory for a period of 60 days after which they will be discarded unless instructions are received from you as to their disposal.

Membership Participation:
☐AALA ☐AAPT ☐ACI ☐ACIL ☐ACS ☐AGC ☐ANSI ☐APA ☐ASCE ☐ASM ☐ASME ☐ASTM ☐AWS
☐CSI ☐GSA ☐ICBO ☐ICET ☐NSPE ☐ORMCA ☐OCA ☐SAE ☐UFCA

Formerly Columbus Testing Laboratory, Inc., Since 1927

An Independent Testing Laboratory

We appreciate the opportunity to be of service to you on this project. Should you have any questions pertaining to the contents of this report or if we may be of further assistance during the design and construction phases, please feel free to call upon me.

Respectfully submitted,

CTL ENGINEERING, INC.

C.K. Satyapriya, M.S., P.E.
Project Engineer

CKS/asa

TABLE OF CONTENTS

Section	Description	Page
i	SYNOPSIS	
I	FINDINGS AND RECOMMENDATIONS	
	1. Location of Site and Borings	1
	2. Existing Soil Conditions	2
	A. Soil Profile	2
	3. Soil Tests and Results	3
	4. Analysis and Recommendations	4
	A. Design Data Provided	4
	B. Site Preparation	4
	C. Foundation Support	7
	D. Changed Conditions	8
	E. Testing and Inspection	9
II	FIELD AND LABORATORY TEST RESULTS	
	Soil Profile	attached
	Test Boring Location Plan	attached
	Test Boring Logs	10-14
	Moisture Content Percent	15
	CBR Test #1	16
	CBR Test #2	17
III	GENERAL FIELD AND LABORATORY TESTING PROCEDURES	18-23
	GENERAL REFERENCES	

GTL ENGINEERING

SYNOPSIS

BACKGROUND

The soils exploration described in this report consisted of locating and performing soil test borings, securing and testing all samples, analyzing subsoil conditions and test results, and recommending safe design criteria and other pertinent data for the proposed project.

THE REPORT

This report is presented in three sections:

Section I describes the location of site and borings, as well as the existing soil conditions. Furthermore, analysis of the results with our recommendations are contained in this section.

Site and boring location plans are shown in Section II. Field data and laboratory testing are appended in this section in the form of soil boring logs, tables, and other graphic forms.

Section III briefly describes the procedure generally adopted for use in soils exploration and equipment used in the field and laboratory for the determination of important engineering properties.

PROCEDURES

The laboratory testing in this report has been conducted in accordance with standard ASTM procedures, and the analysis and recommendations are based on the engineer's judgment and experience, engineer's code of ethics, and theory of geotechnical engineering.

SECTION I

FINDINGS, ANALYSIS AND RECOMMENDATION

1. LOCATION OF SITE AND BORINGS

The site of the proposed roadway and above ground storage tank for which this soils exploration was conducted is located at Hebron Reycle Center facilities of Safety Kleen Corporation in Hebron, Ohio.

A total of 5 soil test borings were made at approximate locations as shown on the enclosed plan. The borings were drilled to depths ranging from 10 feet to 15 feet below the existing ground surface. Test boring #'s 1, 3 and 4 were located along the existing slope, near the crest. Test boring #2 was located at the toe of the slope (steepest portion of the slope). Test boring #5 was located in the area of the proposed tank.

Test borings were located and surface elevations at each boring location were obtained by the client.

Field logs were prepared for each boring by our drillers. The logs contain information concerning the boring method, samples attempted and recovered, indications of the presence of various materials such as coarse gravel, cobbles, etc., and observations of the soil conditions between samples. Therefore, these logs contain both factual and interpretive information. The copies are on file in our office.

The final logs represent our interpretation of the contents of the field logs for the purpose delineated by our client. The final logs are included in Section II of this report.

We must emphasize that our recommendations are based on the purposes of our client, the contents of the final logs and the information contained therein, and not on the field logs.

2. EXISTING SOIL CONDITIONS

A. Soil Profile

The subsurface conditions encountered in the test borings were essentially similar. Topsoil was encountered only in test boring #2; it is understood that the site stripping was completed prior to the conduct of the test borings. Silt-clay soils with lenses of fine to medium sand were encountered in all the test borings. The frequency and thickness of the sand lenses increased with depth. The blow counts indicate no appreciable increase in shear strength of the soils with depth.

Groundwater was encountered only in test boring #5 at elevations 86.5 feet and 83.5 feet, during drilling and at completion of the test boring, respectively. Based on the moisture content data, it is our opinion that ground water elevation in the spring months may be as high as 94.0 feet, particularly in the vicinity of test boring #4. Further, the more permeable sand lenses will transport water and encounter of groundwater in the sand lenses after precipitation is highly probable.

Detailed descriptions of the soils encountered at each boring location can be found on the representative soil boring logs and soil profile enclosed.

3. SOIL TESTS AND RESULTS

Standard penetration tests performed during sampling of the soils show their shear strength and/or density to vary from soft to stiff with blow counts ranging from 4 to 21 for 12 inches penetration.

Split spoon samples were collected during drilling. Laboratory tests were conducted on the soils to obtain their actual moisture and density. They were classified according to the Unified Soils Classification System modified by CTL Engineering, Inc., and subjected to unconfined compressive strength tests and/or hand penetrometer tests.

In addition to the above, selected samples were also subjected to Loss By Ignition tests. Further, a bag sample of the virgin soils and the borrow material stockpiled on the site were brought back and laboratory standard proctor (ASTM D-698) tests were conducted. A laboratory CBR test was also conducted on the virgin soil sample, after the soil was compacted at optimum moisture content and maximum dry density (ASTM D-698) values. Results of the tests indicate that the maximum dry density of the soil is 105.5 pcf at 18% optimum moisture content and a CBR value of 5.5% should be used for the design of the pavement.

Results from all of the above tests are listed on the accompanying soil boring logs and appended data sheets.

4. ANAYLSIS AND RECOMMENDATIONS

A. Design Data Provided

It is understood that the investigated site is meant for the construction of a proposed roadway and above grade tank to be supported on a concrete pad. The surface topography within the site varies considerably.

The proposed roadway is along the crest of a slope. The slope is steepest in the east with a maximum grade of 3 horizontal to 1 vertical. A ravine exists in the west of the site immediately north of the proposed roadway. The proposed roadway will intercept the natural surface water run-off in the ravine.

The proposed pavement consists of both asphalt concrete and P.C. concrete. The surface gradient of the pavement is sloped towards the south, i.e. opposite the natural slopes, in order to restrict water run-off from the site. A ditch has been proposed along the southern edge of the pavement; with catch basins and reinforced concrete pipe outlets in the north and south.

Based on the preceding considerations, the following recommendations have been made.

B. Site Preparation

We recommend a subsurface drain be provided along the perimeter (higher side) of the pavement. Further, a subsurface cut-off drain should also be provided along the north-west perimeter of the perimer. These subsurface drains should extend

to at least 12 inches below the subgrade elevation, provided with 4" diameter perforated pipe and be backfilled with #57 gravel or similar free-draining material.

Based on the subsurface conditions the steepness of the proposed slope, about 1.5 horizontal to 1.0 vertical between section 1+50 to section 5+00, be reduced to no greater than 2.0 horizontal to 1.0 vertical. Further, as fill is being placed the new fill should be tied to the existing slopes by continuous benching, as indicated in the enclosed sketch.

These recommendations are based on compliance with the following governing conditions:

(a) Subgrade densitities of at least 100 percent AASHTO T-99 standard (ASTM D-698) density.

(b) Moisture content of subgrade of not more than 2 percent above or below optimum.

(c) The total pavement structure is constructed in rapid sequence.

(d) Underdrains are provided at the perimeter of the lower parking areas, perimeter cut off drains are provide along the upper side of the parpking areas, and stub drains are installed on the outside of the catch basins.

(e) A tack coat, Item 407, shall be applied between each layer of asphaltic concrete preceded by broom sweeping in the event the existing surfaces become dirty.

(g) All materials shall conform to the latest issue of the State of Ohio Department of Transportation Construction Materials Specifications.

(1) Concrete Aprons (Rigid Pavement)

6.5 inches PC concrete pavement Item 451

4 inches Aggregate Base Item 304 placed in one layer and compacted to 100 percent of ASTM D-698 (AASHTO T-99 standard) density

Tie bars 1/2" x 36" at 30 inches center-to-center

Dowel Bars 1-1/4" diameter, 18" long at 12 inches center-to-center

The concrete pavement composed of reinforced Portland Cement concrete shall be constructed in compliance with ODOT Specification Item 451. It should be noted that we recommend an aggregate base course. Thus our pavement thickness recommendations are different from that proposed previously.

(2) Auto Parking Areas

1.5 inches Asphalt Concrete, Item 846 Type 1

1.5 inches Asphalt Concrete, Item 846 Type 2

Asphalt concrete placed as specified in item 846

0.15 to 0.30 gallons per square yard Prime Coat Item 408

8 inches Aggregate Base Item 304 placed in two layers of approximately equal thickness with each layer being compacted to a density not less than 95 percent of the standard maximum dry density as determined by the AASHTO T-99 (ASTM D-698) method.

(3) Heavy Truck Traffic and Truck Parking Bituminous Areas

One of the following pavement designs in recommended:

2 inches Asphalt Concrete, ODOT Item 846 Type 1

3 inches Asphalt Concrete, ODOT Item 846 Type 2

0.2 to 0.4 gallons per sq. yd. Prime Coat, ODOT Item 408

5 inches Aggregate Base, ODOT Item 304, placed in two layers of approximately equal thickness with each layer uniformly compacted to a density not less than 100 percent of ASTM D-698 (AASHTO T-99 standard)

6 inches of No. 2 stone

C. Foundation Support

It is recommended that:

(1) The proposed tank be supported onto spread footings founded into the virgin soils at or below elevation 97.0 feet, provided the founding elevation is at least 3 feet below the adjacent exterior grade.

(2) All footings should be proportioned using an allowable design value not exceeding 3.0 ksf. This value applies to the total of all design loads--dead, live, wind, exclusive of the weight of footings and overlying backfill.

(3) Footings should be founded at least 3 feet 0 inches below the lowest adjacent exterior grade in order to offset the effects of frost penetration and to obtain the recommended soil bearing value.

(4) No ground water problems should be anticipated during the excavation and construction of shallow foundation units.

(5) Footing excavation in silty-clayey soils should be made neat and may stand temporarily without shoring due to the soil's shear strength, thereby reducing forming costs.

(6) Settlement of footings supported as recommended may vary somewhat across the site due to variation in soil's composition, void ratio, thickness of fill, ground water and loading. It is estimated, however, that total and differential settlements will be within tolerable limits.

(7) All footing excavations should be inspected, and verification of the recommended allowable design value should be made by the use of a Standard Penetrometer.

D. Changed Conditions

Should plans or details for the proposed pavement/tank be changed from those used in preparing this soils investigation report, the soils engineer should be notified in order to make any necessary modifications in our recommendations to account for the changed conditions.

E. Testing and Inspection

Experience shows that the subsoil conditions in an area sometimes vary from the ones indicated by the borings at the specific locations. It is therefore, recommended that a soils inspector with the supervision of a qualified soils engineer be retained on the site to supervise all soils work including the verification of the soil bearing values given in this report by the use of a standard Penetrometer.

Respectfully submitted,

CTL ENGINEERING, INC.

C. K. Satyapriya, M.S., P.E.
Project Engineer

Osama Abdulsafi, Ph. D., P.E.
Project Engineer

CKS/OA:asa

SECTION II

FIELD AND LABORATORY TEST RESULTS

ENGINEERING DESCRIPTION OF ROCK HARDNESS

VERY HARD	Cannot be scratched with knife or sharp pick. Breaking of hand specimens requires several hard blows of geologist's pick.
HARD	Can be scratched with knife or pick only with difficulty. Hard blow of hammer required to detach hand specimen.
MODERATELY HARD	Can be scratched with knife or pick. Gouges or grooves to 1/4" deep can be excavated by hard blow of point of a geologist's pick. Hand specimens can be detached by moderate blow.
MEDIUM	Can be grooved or gouged 1/16" deep by firm pressure on knife of pick point. Can be excavated in small chips to pieces about 1" maximum size by hard blows of the point of a geologist's pick.
SOFT	Can be gouged or grooved readily with knife or pick point. Can be excavated in chips to pieces several inches in size by moderate blows of a pick point. Small thin pieces can be broken by finger pressure.
VERY SOFT	Can be carved with knife. Can be excavated readily with point of pick. Pieces 1" or more in thickness can be broken with finger pressure. Can be scratched readily by fingernail.

STANDARD PENETRATION VALUES

(A) Cohesive Soils

Term	Blows/Foot Standard Penetration	Hand Manipulation
Very Soft	1 - 4	Easily penetrated by fist
Soft	4 - 9	Easily penetrated by thumb
Firm	9 - 12	Penetrated by thumb with moderate effort
Stiff	12 - 22	Readily indented by thumb, but not penetrated
Very Stiff	22 - 30	Readily indented by thumb nail
Hard	30 - 50	Indented with difficulty with thumb nail
Very Hard	Over 50	

(B) Granular Soils

Term	Blows/Foot Standard Penetration
Loose	4 - 9
Medium Dense	9 - 15
Dense	15 - 25
Compact	25 - 50
Very Compact	Over 50

ROCK WEATHERING DESCRIPTIONS

FRESH	Rock fresh, crystals bright, few joints may show slight staining. Rock rings under hammer if crystaline.
VERY SLIGHT	Rock generally fresh, joints stained, some joints may show thin clay coatings, crystal in broken face show bright. Rock rings under hammer if crystaline.
SLIGHT	Rock generally fresh, joints stained, and discoloration extends into rock up to 1". Joints may contain clay. In granitoid rocks, some occasional feldspar crystals are dull and discolored. Crystalline rocks ring under hammer.
MODERATE	Significant portions of rock show discoloration and weathering effects. In granitoid rocks, most feldspars are dull and discolored; some show clayey. Rock had dull sound under hammer and shows significant loss of strength as compared with fresh rock.
MODERATELY SEVERE	All rock except quartz discolored or stained. In granitoid rocks, all feldspars dull and discolored and majority show kaolinization. Rock shows severe loss of strength and can be excavated with geologist's pick. Rock goes "clunk" when struck.
SEVERE	All rock except quartz discolored or stained. Rock "fabric" clear and evident, but reduced in strength to strong soil. In granitoid rocks, all feldspars kaolinized to some extent. Some fragments of strong rock usually remaining.
VERY SEVERE	All rock except quartz discolored or stained. Rock "fabric" discernible, but mass effectively reduced to "soil" with only fragments of strong rock remaining.
COMPLETE	Rock reduced to "soil". Rock "fabric" not discernible or discernible only in small scattered locations. Quartz may be present as dikes or stringers.

DESCRIPTION

(A) Moisture content is expressed relative to plastic properties.

Term	Description
Dry	Powdery
Damp	Moisture content slightly below plastic limit
Moist	Moisture content above plastic limit, but below liquid limit
Wet	Moisture content above liquid limit
Saturated	Free water in cohesionless soil

(B) Texture is based on the Unified Soil Classification System. Soil particle size definitions are as follows.

Description	Size
Boulders	Larger than 8"
Cobbles	8" to 3"
Gravel:	
Coarse	3" to 3/4"
Fine	3/4" to 4.76 mm
Sand:	
Coarse	4.76 mm to 2.00 mm
Medium	2.00 mm to 0.42 mm
Fine	0.42 mm to 0.074 mm
Silt	0.074 mm to 0.005mm
Clay	Smaller than 0.005 mm

GTL ENGINEERING

Project: Safety Kleen, Hebron, Ohio

CTL Project No.: 86-5146 Date Drilled: 9/10/86

Boring No.: 1 Elev. 96.0 Station

Ground Water Encountered at NONE

Ground Water at Completion NONE

at 24 hrs. ; at hrs.

G.W.Volume: Light ☐ Medium ☐ Heavy ☐

CTL ENGINEERING INC.
CONSULTING ENGINEERS
TESTING · INSPECTION
LABORATORY SERVICES
ENGINEERING INC. 2850 Fisher Road • Columbus, Ohio 43204 • 614-276-8123

TYPE & SAMPLE NO	DEPTH FT.	LEGEND	SOIL DESCRIPTION	PENETRATION BLOWS PER 6-IN	PENETRATION BLOWS PER 12-IN	NATURAL DENSITY γ pcf	UNCONFINED COMPR STRGTH qu psf	STRAIN Eu %	GRADATION % Agg	C.S.	M.S.	F.S.	SM	clay
L1	1		Stiff, Damp, Brown, Silty CLAY, Some F/M Sand	7, 9, 12	21		*7700							
	2													
	3		3.0'	5										
L2	4		Firm, Damp, Gray, F/C Sandy, Silty CLAY, Some F/C Gravel (TILL)	5, 6	11		*7800							
L3	5		Stiff, SAME, Some Fine Gravel (TILL)	5, 7, 8	15		*9000+							
	6													
	7													
	8													
L4	9		SAME, Some F/C Gravel	5, 6, 9	15		*9000+							
	10		BOTTOM OF BORING 10.0'											
	11		*HAND PENETROMETER											
	12													
	13													
	14													
	15													
	16													
	17													
	18													
	19													
	20													

PL — NATURAL ▽ — LL % (0, 10, 20, 30, 40, 50)

Project: Safety Kleen, Hebron, Ohio

CTL Project No.: 86-5146 Date Drilled: 9/10/86

Boring No.: 2 Elev. 99.0 Station

Ground Water Encountered at NONE

Ground Water at Completion NONE

at 24 hrs. ; at hrs.

G.W.Volume: Light ☐ Medium ☐ Heavy ☐

CTL ENGINEERING INC.
CONSULTING ENGINEERS
TESTING · INSPECTION
LABORATORY SERVICES
ENGINEERING
2860 Fisher Road • Columbus, Ohio 43204 • 614-276-8123

TYPE & SAMPLE NO	DEPTH FT.	LEGEND	PL — NATURAL — LL % (0 10 20 30 40 50)	SOIL DESCRIPTION	PENETRATION BLOWS PER 6-IN	PENETRATION BLOWS PER 12-IN	NATURAL DENSITY γ^n_u pcf	UNCONFINED COMPR STRGTH qu psf	STRAIN Eu %	GRADATION % Agg	C.S.	M.S.	F.S.	Silt	clay
				Brown TOPSOIL 4.5"											
L1	1			Soft/Firm, Damp, Brown, Silty, CLAY, Some F/C Sand, Trace Fine Gravel	7										
					5										
	2				4	9									
				3.0'	7										
L2	3			Stiff, Damp, Brown & Gray, F/C Sandy, Silty CLAY, Little Fine Gravel (TILL)	9										
	4				9	18		*8300							
				5.0'	8										
L3	5			Stiff, Damp, Brown & Gray, F/C Sandy, Silty, CLAY, Some F/C Gravel (TILL)	9										
	6				12	21									
	7														
	8														
					6										
L4	9			Stiff, Damp, Gray, SAME (TILL)	7										
	10				9	16		*9000							
	11			BOTTOM OF BORING 10.0'											
	12			*HAND PENETROMETER											
	13														
	14														
	15														
	16														
	17														
	18														
	19														
	20														

Project: Safety Kleen, Hebron, Ohio

CTL Project No.: 86-5146 Date Drilled: 9/10/86

Boring No.: 3 Elev. 100.0 Station

Ground Water Encountered at NONE

Ground Water at Completion NONE

at 24 hrs. ; at hrs.

G.W. Volume: Light ☐ Medium ☐ Heavy ☐

CTL ENGINEERING INC.
CONSULTING ENGINEERS
TESTING · INSPECTION
LABORATORY SERVICES
ENGINEERING
2860 Fisher Road · Columbus, Ohio 43204 · 614-276-8123

Sample	Depth Ft.	Legend	PL — Natural — LL % (10 20 30 40 50)	Soil Description	Penetration Blows per 6-in	Penetration Blows per 12-in	Natural Density γ_v pcf	Unconfined Compr Strgth q_u psf	Strain ε_u %	Gradation % Agg	C.S.	M.S.	F.S.	Silt	Clay
L1	1			Stiff, Dry, Brown, Silty CLAY, Little Fine Sand	6, 7, 9	16									
	2			2.5'											
L2	3			Stiff, Damp, Brown, F/C Sandy, Silty, CLAY, Little Medium Sand	7, 7, 8	15		*8500							
	4														
L3	5			Stiff, Damp, Brown, Fine Sandy, Silty CLAY, Little Medium Sand	7, 7, 10	17		*4900							
	6			7.0'											
	7														
	8														
L4	9			Stiff, Damp, Brown & Gray, Silty CLAY, Some F/C Sand (TILL)	7, 9, 9	18		*9000							
	10			BOTTOM OF BORING 10.0'											
	11			*HAND PENETROMETER											
	12														
	13														
	14														
	15														
	16														
	17														
	18														
	19														
	20														

Project: Safety Kleen, Hebron, Ohio

CTL Project No.: 86-5146 Date Drilled: 9/10/86

Boring No.: 4 Elev. 96.6 Station

Ground Water Encountered at NONE

Ground Water at Completion NONE

at 24 hrs. ; at hrs.

G.W. Volume: Light ☐ Medium ☐ Heavy ☐

CTL ENGINEERING INC.
CONSULTING ENGINEERS
TESTING · INSPECTION
LABORATORY SERVICES
ENGINEERING
2850 Fisher Road • Columbus, Ohio 43204 • 614-276-8123

TYPE & SAMPLE NO.	DEPTH FT.	LEGEND	PL — NATURAL — LL % (0, 10, 20, 30, 40, 50)	SOIL DESCRIPTION	PENETRATION BLOWS PER 6-IN	12-IN	NATURAL DENSITY γ_u pcf	UNCONFINED COMPR STRGTH qu psf	STRAIN Eu %	GRADATION % Agg	C.S.	M.S.	F.S.	Silt	clay
L1	1			Stiff, Damp, Brown, Fine, Sandy Silty CLAY 2.0'	9, 8, 10	18		*6300							
	2														
L2	3			Firm, Damp, Brown, Fine Sandy, SILT, Little Clay 3.5'	4, 5, 5	10									
	4														
L3	5			Soft/Firm, Moist, Brown, Silty, Fine SAND, Trace Clay 7.0'	4, 4, 5	9									
	6														
	7														
	8			Stiff, Damp, Brown & Gray, Fine, Sandy, Silty CLAY, Little M/C Sand											
L4	9				6, 9, 11	20		*8500							
	10			BOTTOM OF BORING 10.0' *HAND PENETROMETER											
	11														
	12														
	13														
	14														
	15														
	16														
	17														
	18														
	19														
	20														

Project: Safety Kleen, Hebron, Ohio

CTL Project No.: 86-5146 Date Drilled: 9/10/86

Boring No.: 5 Elev. 94.8 Station

Ground Water Encountered at 8.0'

Ground Water at Completion 11.2'

at 24 hrs. ; at hrs.

G.W. Volume: Light ☐ Medium ☒ Heavy ☐

CTL ENGINEERING INC.
CONSULTING ENGINEERS
TESTING · INSPECTION
LABORATORY SERVICES
ENGINEERING
2860 Fisher Road • Columbus, Ohio 43204 • 614-276-8123

TYPE & SAMPLE NO	DEPTH FT.	SOIL DESCRIPTION	PENETRATION BLOWS PER 6-IN	PENETRATION BLOWS PER 12-IN	NATURAL DENSITY γ_u pcf	UNCONFINED COMPR STRGTH q_u psf	STRAIN ε_u %	GRADATION % Agg	C.S.	M.S.	F.S	SIR	CLAY
L1	1	Soft/Firm, Damp, Brown, Silty, CLAY, Some F/C Sand, Little F/C Gravel	3										
			4										
	2		5	9									
L2	3	Soft/Firm, Damp, Brown, Silty, CLAY, Little F/M Sand	4										
			4										
	4		5	9									
L3	5	Stiff, Damp, Brown, F/C Sandy, F/C Gravelly, Silty CLAY	4										
			6										
	6		7	13									
	7												
	8	8.0'											
L4	9	Loose, Wet, Brown, Silty, F/C SAND AND FINE GRAVEL, Little Clay	2										
			2										
	10		2	4									
	11												
	12												
	13	13.0'											
L5	14	Firm, Damp, Gray, F/C Sandy, Silty, CLAY, Some F/C Gravel (TILL)	3										
			4										
	15		6	10									
	15	BOTTOM OF BORING 15.0'											
	16												
	17												
	18												
	19												
	20												

Moisture-Density Curve No. _____

Standard Proctor

CLIENT Safety-Kleen Corporation
777 Big Timber Road
Elgin, Illinois 60120

Soil Description Brown, Sandy, Clay, Abundant Shale

Source _____

HTL ENGINEERING

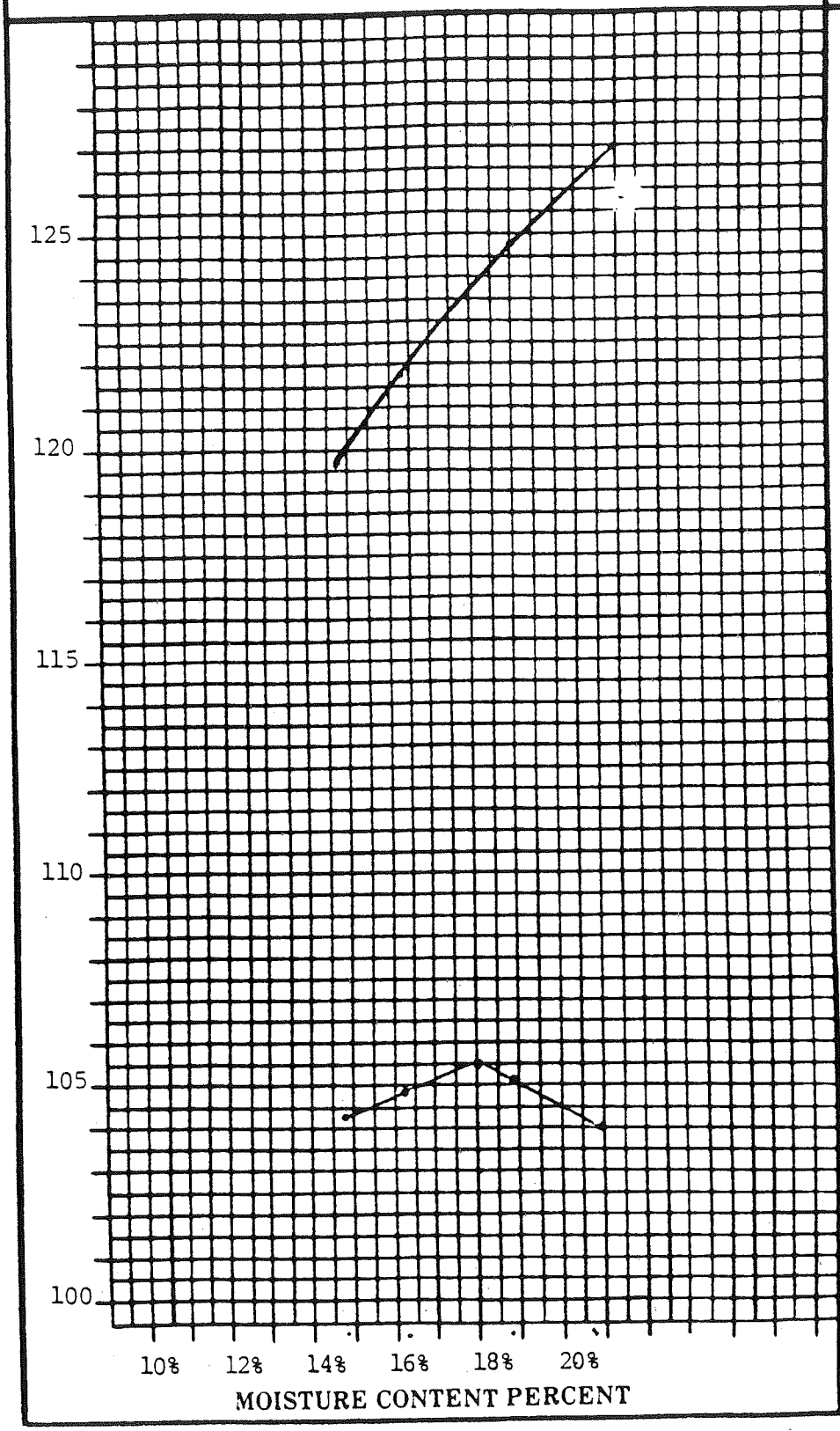

Project No. 86-6293

Date _____

AASHTO Test _____

ASTM Test D _____

Hammer Wt. #5

Hammer Drop 12 inches

No. Blows/Layer 25

No. Layers 3

Mold Size 1/30

Grain-Size Distribution

%* Aggregate _____

% Coarse Sand _____

% Medium Sand _____

% Fine Sand _____

% Silt _____

% Clay _____

L.L. _____

P.L. _____

P.I. _____

Nat. W_c _____

Test performed on material passing #4 sieve

Max. Dry Density 105.5 PCF

Optimum Moisture 18 %

*Sieve % Retained

CALIFORNIA BEARING RATIO (CBR) TEST

PROJECT: Safety-Kleen Corporation

CBR TEST NO.: 1 (18% Moisture)

CTL PROJECT NO.: 86-6293

TEST LOCATION:

SOIL DESCRIPTION: Brown, Sandy, Clay, Abundant Shale

DEPTH:

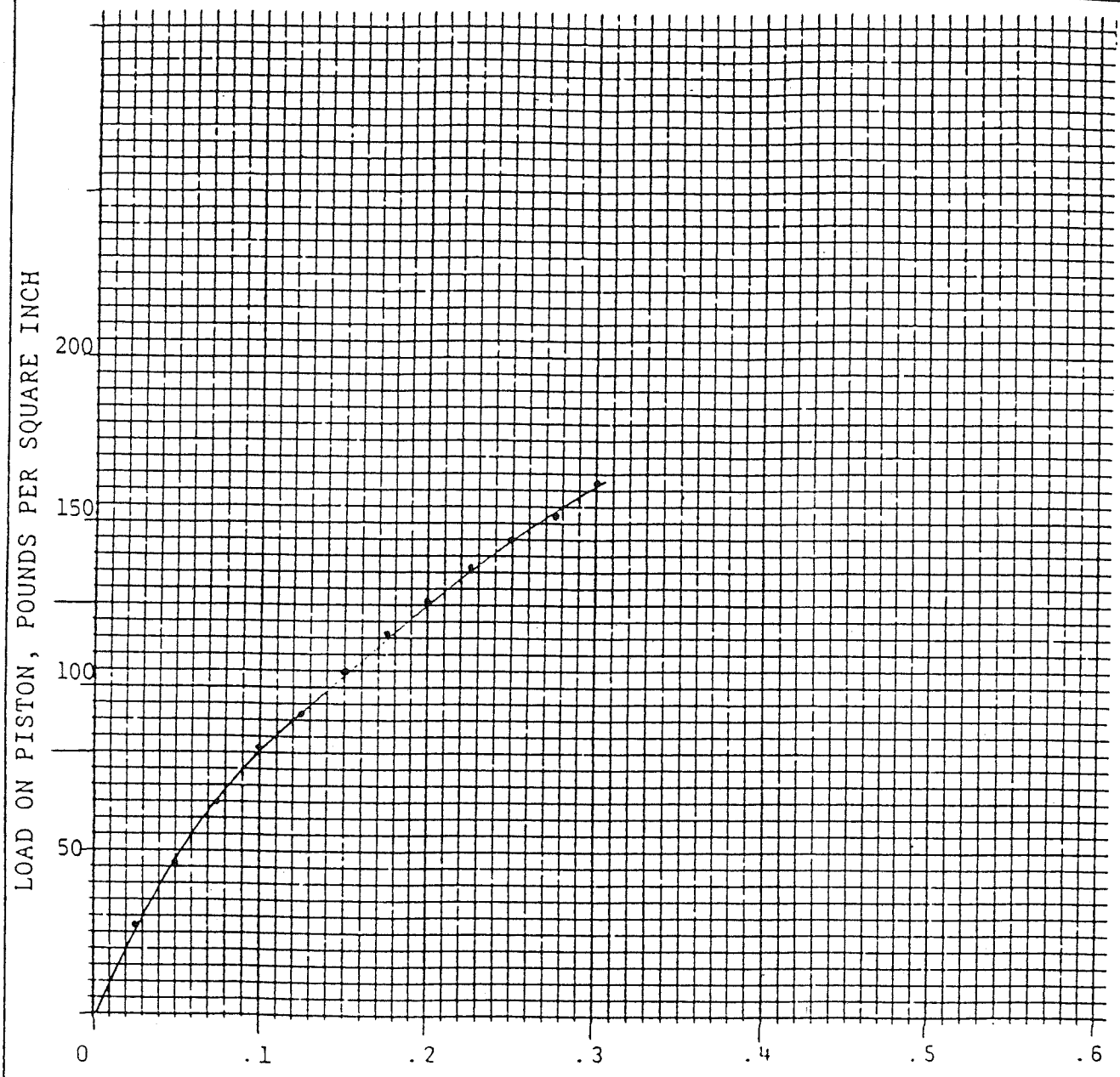

CBR at .1 = 8%
CBR at .2 = 8.3%

CTL ENGINEERING

CALIFORNIA BEARING RATIO (CBR) TEST

PROJECT: Safety-Kleen Corporation

CBR TEST NO.: 2 (Saturated)

CTL PROJECT NO.: 86-6293

TEST LOCATION:

SOIL DESCRIPTION: Brown, Sandy, Clay, Abundant Shale

DEPTH:

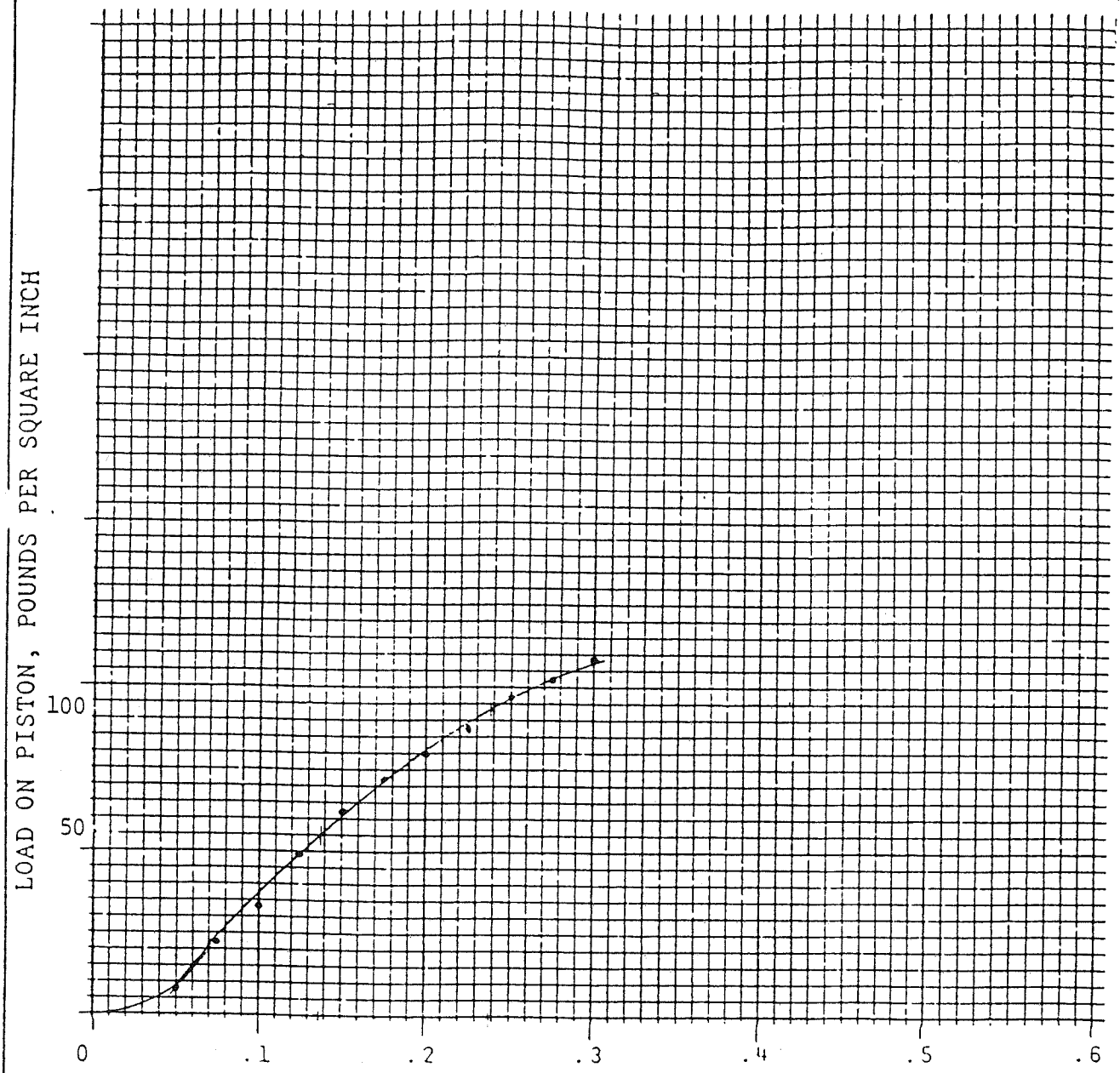

PENETRATION, INCHES

CBR at .1 = 5.5%
CBR at .2 = 6.2%

CTL ENGINEERING INC

SECTION III

GENERAL FIELD AND LABORATORY TESTING PROCEDURE

1. BORING, SAMPLING AND GROUND WATER OBSERVATION

A variety of drilling equipment and procedures are used in performing the soil test borings, and the choice depends upon the nature of the soil, the depths of borings, and the particular type of samples required to obtain project specific information.

Where caving soils are encountered, drill casing or hollow-stem augers are used to stabilize the drill hole and to shut off ground water. This permits undisturbed liner samples or Shelby tube samples to be obtained in a relatively dry hole. Where the soils are of a cohesive character or where caving is not experienced, the drill hole can also be advanced by continuous flight augers, 4 inches to 6 inches in diameter, depending upon sample requirements. These holes are drilled to depths required (to over 100 feet if necessary). Where soft clays are encountered, water or drilling mud is circulated to stabilize and maintain the sides of the test holes.

Split Spoon samples along with standard penetration numbers of the soils are obtained at significant changes or at depth intervals of not more than 5 feet. The first sample is secured from the soils below the topsoil to a depth of 18 inches at which depth floor slabs are generally supported. The second sample is taken at a depth of 2 feet 6 inches where shallow footings are placed, and the third and fourth samples are obtained at depths of 5 feet and 9 feet, respectively, in the region where most basement structures are founded. The other samples are

obtained at intervals of 5 feet thereafter. Split Spoon samples are obtained utilizing a standard sampler having an inside diameter of 1-3/8 inches and an outside diameter of 2 inches. The samples are then placed in a glass jar 2 inches in diameter which is sealed against moisture loss during transportation to the laboratory. During freezing conditions, the samples are stored and shipped in insulated containers. Shelby-tube samples or thin-walled tubing which are pressed into soil strata by utilizing the hydraulic feed system of the drill rig. Other sampling procedures and field testing devices are used for special applications and information. A description of these is found in the section entitled "Testing".

It may be noted that while the test borings are drilled and sampled by experienced drillers, it is sometimes impossible to record changes in stratification of the soils within narrow limits, especially at great depths. In the absence of foreign substances, it is sometimes difficult to distinguish between discolored soils and clean soil fill. Furthermore, the soil profile reflects soil conditions in a particular boring only, and other soil variations may occur between locations. The lines designating the interface between soil and/or rock materials on the logs of borings and on soil or geotechnical profiles represent approximate boundaries. Uncertain transitions within the strata and/or color changes have been delineated by a dashed line.

Ground water levels and volumes are carefully recorded at the time the borings are drilled. Subsequent rainfall or seasonal changes may vary these levels and volumes, and this should be accounted for in the planning and scheduling of construction. Where the borings are made in the fine-grained soils, the ground water may not enter the borings during the time of the investigation.

2. TESTING

A. Field Testing

A standard penetration test (according to current ASTM D-1452 and D-1586 procedures) is performed to obtain Split Spoon Samples. These procedures specify that the sampler be driven into the soils using a drop hammer weighing 140 pounds falling freely through a distance of 30 inches. The number of blows required to drive a standard sampler through three successive increments of 6 inches is recorded on the soil boring logs. The standard penetration index (blows per foot) is obtained by adding the second and third increment values.

The type of sample and its identifying number, the depth of the sample, and the penetration results are found on the boring logs. Continuous logs of consistency, moisture, color and description of the soils are recorded during boring and sampling; other pertinent field notes are furnished whenever significant.

B. Laboratory Testing

Cohesive or clay samples are subjected to routine tests for visual classification, moisture content, natural density, and unconfined compressive strength. Granular or non-cohesive soils

are subjected to routine tests for visual classification, natural density and composition.

(1) Visual Classification

The visual classification of soil samples is used to modify the field classification as described in the finalized boring logs. CTL Engineering, Inc. has adapted a general classification system based on the Unified Soil Classification System. The primary soil component is defined as containing more than 50 percent of the sample by weight. Minor components are defined as containing:

35 to 50 percent-And
20 to 35 percent-Some
10 to 20 percent-Little
1 to 10 percent-Trace

On the boring logs, the primary component is shown first and in capital letters. Minor components follow with their relative amounts as shown by the terms And, Some, Little, and Trace. General color of the sample is normally shown preceding the major component. Major components are GRAVEL, SAND, SILT, or CLAY with further description of F-fine, M-medium, or C-coarse used to classify gravels and sands. Silts and clays are classified according to the plasticity with non-plastic, fine-size particles described as silt and highly plastic particles described as clay. The terms silty clay or clayey silt are often used to further define the silt-clay fractions. The composition of

granular materials is obtained by passing known weight of dried material through a set of sieves ranging from #40 to #200 (U.S. Standard Sieve). This procedure is in accordance with ASTM D-442. When grain distribution of particles smaller than #200 sieve is required, a Hydrometer Analysis, described in the second part of the ASTM D-442 procedure, is performed fulfilling a complete mechanical analysis.

(2) Moisture Content and Density

A portion of each sample is weighted, oven dried at 105 degrees and re-weighed to obtain the weight of water. The moisture content is defined as the ratio of the weight of the water to the weight of the dry soil expressed as a percentage. The natural density is obtained from the weight and known volume of the sample.

(3) Unconfined Compressive Strength

Undisturbed liner Shelby-Tube samples of the cohesive soils are subjected to unconfined compressive strength tests in accordance with the ASTM D-2166 procedures. In this test, a cylinder of soil is subjected to an axial static loading without lateral support using a controlled rate of strain. The stress (load per unit area) is then measured at intervals of 30 seconds. A stress-strain curve is plotted if necessary, and the ultimate strength is taken at failure, or at 20 percent strain if the

ATTACHMENT 4-12

STORAGE BIN #2 DESIGN AND INSTALLATION ASSESSMENT
PREPARED BY: MAINTENANCE ANALYSIS SYSTEMS, INC.
DECEMBER 2, 1994

Original Fed-Exd to OEPA 12/5/94 GK

MAS

MAINTENANCE ANALYSIS SYSTEMS, INC.

PREDICTIVE MAINTENANCE COMPANY • P.O. BOX 652 • NEWARK, OHIO 43055 • 614/344-5888 • FAX 614/344-5805

December 2, 1994

Mr. Gerrit Konink
Plant Engineer
SAFETY-KLEEN
581 Milliken Dr.
Hebron, Ohio 43025

Dear Mr. Konink:

MAINTENANCE ANALYSIS SYSTEMS (MAS) is pleased to submit the following assessment of the HYDRAPULPER ADDITION that is being installed at the SAFETY-KLEEN Hebron Recycle Center. This will include the new Hydrapulper and the associated storage bin #2. There were numerous questions about our previous assessment dated 10/17/94. This is intended to replace that assessment and answer the questions that developed.

WANG ENGINEERING, INC (WEI) of Chicago provided Geotechnical and Environment Engineering support.

The Storage Bin #2 and Hydrapulper were assessed under the Administrative Code 3745-66-92 "Design and installation of new tank systems or components."

STORAGE BIN #2

This is located next to storage tanks #98 and #96, in Tank Farm #6; these tanks were part of the 9-8-89 WANG ENGINEERING INC. "REPORT HAZARDOUS WASTE TANK ASSESSMENT SAFETY-KLEEN CORP. RECYCLE CENTER HEBRON, OHIO.

The bin will be used to store crushed solid particles (fines) from the dry cleaning filter recycling system. These will then be feed into the HYDRAPULPER and liquified. Input and output are facilitated by augurs. The present thickness of the bin is adequate to safely perform this function.

3745-66-92A
The concrete secondary containment dike has been coated with a STONHARD liner. A specification sheet is attached. The dike system can contain 26,000 gallons. The bin volume is 8,800 gallons. The containment system, has previously been assessed in 9-8-89 by WANG ENGINEERING, INC, is found to be suitable for this application. It meets all requirements of specification 3745-66-93.

(1) This bin was constructed to DUPPS Company standards. It has been in use in similar applications for 9 years without any problems and per our conversation with a DUPPS licensed professional engineer the Bin is well designed, typical of company standards.

(2) The types of waste to be handled by this storage bin are shredded solids from dry cleaning filters which primarily contain waste mineral spirits and halogenated solvent (Tetrachloroethylene). These solvents are either ignitable or toxic. These are compatible with the carbon steel construction of the bin based on the past success SAFETY-KLEEN has had in storing and handling these materials.

(3&4) These requirements are not applicable. The hydrapulper is above ground, not in contact with soil or water.

(5A) This base foundation is the same design that has supported Bin #1 for over 4 years without any problems. It also has supported the heavier loading of tanks 96 and 98 for over 5 years without any problems. It is acceptable for the support of Bin #2.

(5B)
The Bin is anchored to prevent dislodgement or flotation.

(5C)
The bin is above ground and not subject to frost heave.

3745-66-92B

(5B) The tank was internally inspected by Michael L. Anderson, P.E. Following this inspection two MAS technicians took numerous ultrasonic thickness readings. Both the internal and external surveys were in accordance with the American Petroleum Institute publication "Guide for Inspection of Refinery Equipment" chapter XIII "Atmospheric and Low-Pressure Storage Tanks," fourth edition 1981 reaffirmed, 1987.

Some minor corrosion (5) points were found but the present thickness is well in excess of any design limitations. Regular painting and maintenance should assure the long term operation of this bin. A separate inspection report is on file at SAFETY-KLEEN.

None of the following were found; (1) weld breaks, (2) punctures, (3) scrapes (4) cracks, and (6) other structural damage or inadequate construction or installation.

3745-66-92C

All components of this system are above ground making this specification not applicable.

3745-66-92D

Discussions with contractors and Safety Kleen personnel verify that all fittings were tested for tightness prior to operation. Michael L. Anderson, P.E. visually inspected the ancillary equipment prior to operation and found no looseness or damaged welds.

3745-66-92E

The ancillary equipment is properly supported and protected against physical damage and excessive stress due to settlement , vibration, expansion or contraction.

3745-66-92F

Since paragraph A3 of this specification is not applicable no corrosion protection per this specification is needed.

HYDRAPULPER

This is located per SAFETY-KLEEN "HYDRAPULPER ADDITION EQUIPMENT ARRANGEMENT PLAN" drawing #642-6700-200, in a newly constructed addition to the Truck Station #7 Building.

The hydrapulper will be used to liquify the stored fines from the dry cleaning filter recycling system. Solid fines from the Storage Bin is input to this hydrapulper by augurs, the output is pumped liquid. Any remaining solids are dropped into a drum through two knife gates. This is a new unit manufactured by BLACK CLAWSON COMPANY per their drawing #30048910-1.

3745-66-92A

The hydrapulper concrete building floor and the perimeter curb in the building serve as the secondary containment system. The floor has been coated with a STONHARD impermeable liner; a specification sheet is attached. The dike system can contain 4,400 gallons. The hydrapulper may contain a maximum of 3,300 gallons. The building, the foundation and the containment system were designed by Mr Charles E. Weber, licensed Professional Engineer (Ohio registration #E-53615). Per the attached letter from Mr. Weber, the design is in accordance with the Ohio Basic Building Code and the Building Code Requirements for Reinforced Concrete (ACI-318). This also meets and exceeds the API Standard 650 Appendix B foundation requirements for vertical storage tanks. The foundation is suitable for this application. The containment system meets all the requirements of 3745-66-93.

(1)The hydrapulper has been designed to BLACK CLAWSON'S successful design criteria. This is a standard in the pulp and paper industry. It is widely used and accepted. An annual thickness monitoring plan has been started to assure a controlled rate of material erosion.

west side

20 - WEST SIDE

3001 To 3065

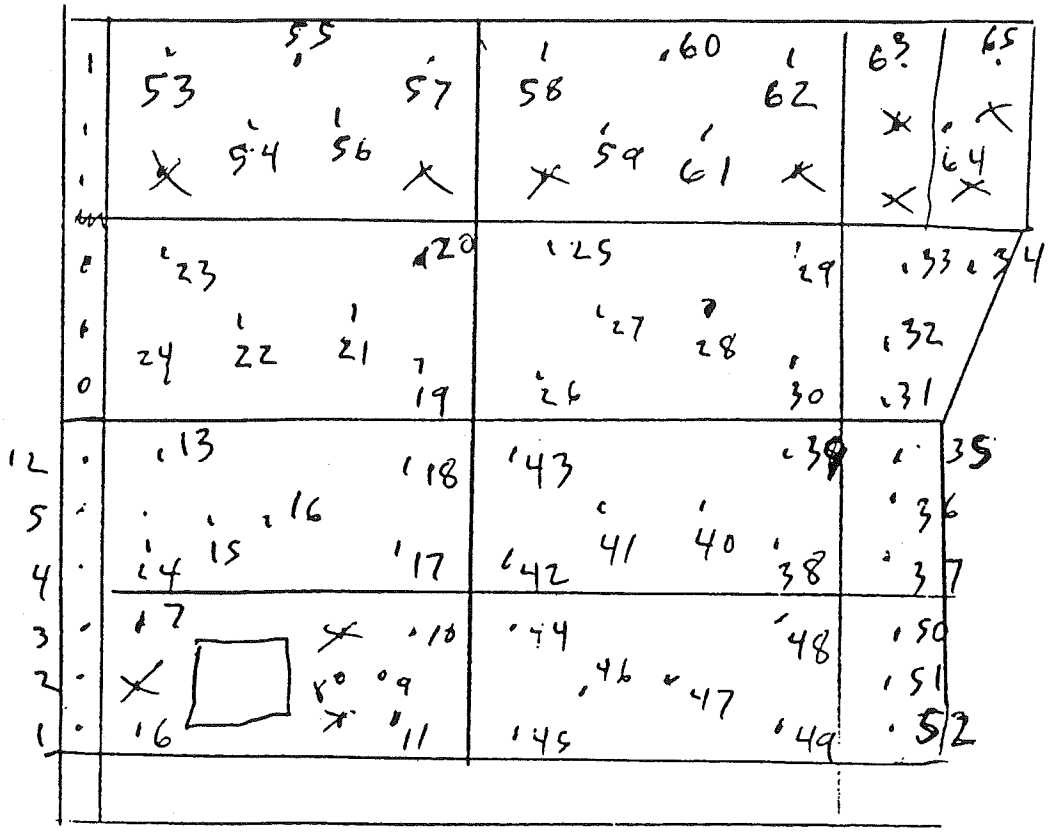

52

East side

10 = EAST SIDE

2001 TO 2063

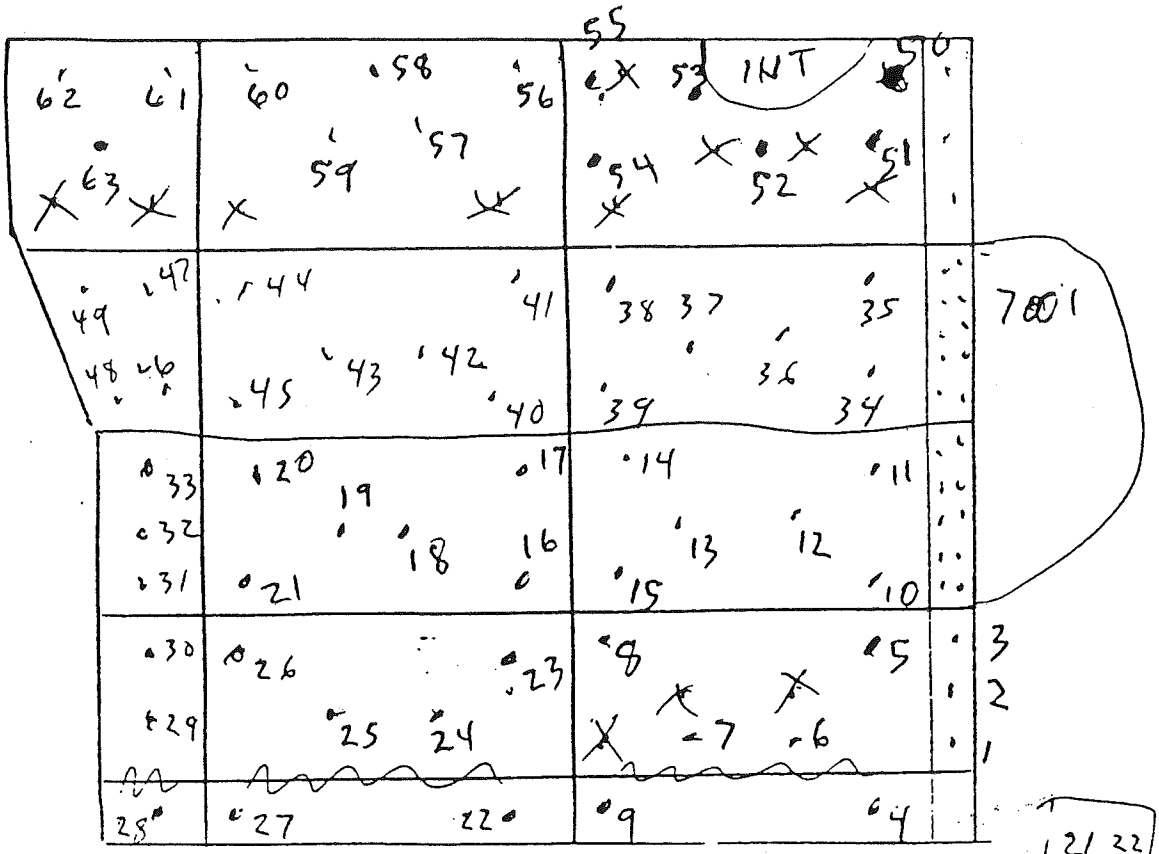

6001 TO 6009

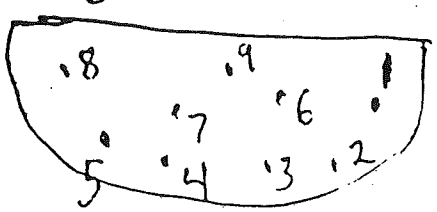

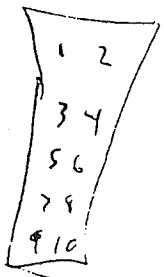

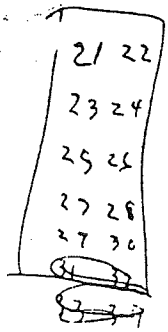

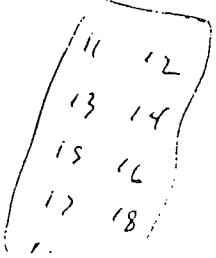

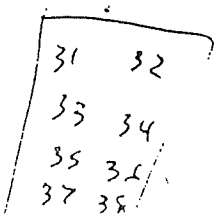

We calculated the minimum shell ring design thickness using the API standard 650 "1 foot method" the minimum shell design for a 2 specific gravity fluid is 0.013 inch. The actual shell is 0.250 inch. This is well within acceptable limits.

(2) The types of waste to be handled are waste residues from mineral spirits and halogenated solvents, (Tetrachloroethylene). These solvents are either ignitable or toxic. These materials are compatible with the carbon steel construction of the vessel.

(3&4) These requirements are not applicable. The hydrapulper is above ground, not in contact with soil or water.

(5A)
As previously described the Hydrapulper foundation was designed by a Mr. Charles E. Weber,P.E.. ho has ensured that the foundation will maintain the load of a full tank. The attached CFW Specification sheets call out for a compressive strength of 4000 psi. The four sixteen inch square supports will then result in a total load capability of 4 million pounds. The total weight of the hydrapulper fully loaded will be less then 50,000 pounds, resulting in a safety factor of 80.

(5B)
The hydrapulper is anchored to prevent dislodgement or flotation.

(5C)
The Hydrapulper is located inside a building and above ground. This and other climatic conditions have been considered by the design professional engineer.

3745-66-92B

As an independent, qualified, registered professional engineer, Michael L. Anderson, P.E. surveyed the hydrapulper and found the following. None of the following were found; (1) weld breaks, (2) punctures, (4) cracks, (5) corrosion, and (6) other structural damage or inadequate construction or installation. (3) There was one minor scrape of the exterior paint but this should have no affect on the hydrapulper function or rate of corrosion.

3745-66-92C

All components of this system are above ground making this specification not applicable.

3745-66-92D

The piping system has been pressure tested to check for leaks or installation defects. The hydrapulper flanges and fittings are to be checked for tightness before the unit goes into service. Michael L. Anderson inspected the piping and other ancillary equipment and did not find any weld or other damage.

3745-66-92E

The ancillary equipment is properly supported and protected against physical damage and excessive stress due to settlement , vibration, expansion or contraction.

3745-66-92F

Since paragraph A3 of this specification is not applicable no corrosion protection per this specification is needed.

MAS
MAINTENANCE ANALYSIS SYSTEMS, INC.
PREDICTIVE MAINTENANCE COMPANY ▪ P.O. BOX 652 ▪ NEWARK, OHIO 43055 ▪ 614/344-5888 ▪ FAX 614/344-5805

CERTIFICATION STATEMENT

I, Michael L. Anderson, have performed and supervised the assessment of the storage bin #2 and the new hydrapulper that make up the hydrapulper addition project at the SAFETY-KLEEN facility located at 581 Milliken Drive, Hebron, Ohio. My duty was and an evaluation of these two components as containment vessels and their secondary containment structure as required by Ohio Administrative Code of Hazardous Waste Management specification 3745-66-92 through 3745-66-93

I certify under penalty of law that this document, and all attachments, were prepared under my direction or supervision. The data gathering was also performed under my direction and supervision by qualified personnel with a system designed to assure proper gathering and evaluation of the data. To my knowledge the information contained in these reports is true, accurate, and complete. I wrote all the reports.

I am aware that there are significant penalties for submitting false information.

Michael L. Anderson, P.E.
Ohio Registered Professional Engineer
Registration No.:E-51762

STONLINER 677

PRODUCT DATA

STONHARD

ON FLOOR. — Tank Farm #6

PRODUCT DESCRIPTION:
STONLINER 677 is a highly crosslinked novolac epoxy system applied at a nominal thickness of 120 mils/3 mm. The mortar, engineering fabric, mineral composite topcoat sequencing provides a chemical barrier for resistance to occasional rubber wheels and foot traffic, thermal shock, thermal cycling, static cracks and permeation. The STONLINER 677 system has excellent resistance to concentrated sulfuric acid, chlorinated solvents and caustics.

TYPICAL USES, APPLICATIONS:
- Secondary Containment Areas
- Tank Farms
- Sumps and Trenches
- Pump Pads and Pedestals
- Neutralization Pits

PRODUCT ADVANTAGES:
- Excellent chemical resistance to concentrated sulfuric acid, chlorinated solvents and caustics.
- Engineering fabric resists cracking.
- Mineral composite topcoat for increased impermeability.
- Factory proportioned units for easy application.

CHEMICAL RESISTANCE:
STONLINER 677 is formulated to resist a variety of chemical solutions. Please refer to the 600 SERIES CORROSION RESISTANCE GUIDE which lists reagent concentration and temperature recommendations for each product.

PACKAGING:
STONLINER 677 is supplied as a pre-measured unit for easy handling to eliminate on-site proportioning.
Each unit consists of:

600 SERIES MORTAR: 1 carton, 6 containers of Part A (liquids)
1 carton, 6 containers of Part B (liquids)
6 bags of aggregate

PHYSICAL / CHEMICAL CHARACTERISTICS

Compressive Strength (ASTM C-579)	10,000 psi
Tensile Strength (ASTM D-307)	3,000 psi
Flexural Strength (ASTM C-580)	13,000 psi
Flexural Modulus of Elasticity (ASTM D-790)	1.0×10^6 psi
Hardness (ASTM D-2240 / Shore D Durometer)	85-90
Bond Strength (ACI Committee #503/PP. 1139-1141)	>400 psi (concrete failure)
Abrasion Resistance (ASTM D-4060, CS-17 Wheel)	0.07 gm. max weight loss
Thermal Coefficient of Linear Expansion (ASTM E-381)	2.2×10^{-5} in/in-°C
Shelf Life@70°F/21°C	1 year
Color	Gray
Gel Time @70°F/21°C	
Mortar	20 minutes
Saturant Coat	20 minutes
Topcoat	20 minutes

ENGINEERING FABRIC: One 200 sq ft/18.58 sq m roll

600 SERIES SATURANT: 1 carton, 2 containers of Part A (liquids)
2 containers of Part B (liquids)

600 SERIES TOPCOAT: 2 cartons, 2 containers of Part A (liquids)
2 containers of Part B (liquids)

COVERAGE:

Each unit of STONLINER 677 will cover approximately 180 sq ft/16.72 sq m at a thickness of 120 mils/3 mm.

STORAGE CONDITIONS:

Store all components of STONLINER 677 between 50°F/10°C and 75°F/24°C in a dry area out of direct sunlight. PLEASE HANDLE AND STORE PROPERLY. The fiberglass mat must be free of contaminants and moisture to ensure maximum mechanical and chemical performance.

CONCRETE PREPARATION:

All loose fragments, unsound concrete, laitance, oil, dirt and grease must be removed prior to applying any Stonhard overlayment.

Loose and unsound concrete is removed using chipping hammers or a hammer and chisel.

All laitance must be removed by abrasive blasting or scarifying. When laitance exists, concrete has a very dense and smooth surface. A laitance free surface will have an "open" appearance like rough sand paper due to exposed particles of sand.

Oil, dirt and grease are removed by abrasive blasting or scarifying. If oil, dirt and grease are not completely removed with the mechanical preparation, scrub contaminated area with industrial cleanser and a mechanical or hand wire brush.

When all mechanical preparation and scrubbing is complete, vacuum the area with an industrial wet/dry vacuum to remove dirt and dust.

Other methods of concrete preparation require manufacturer's approval.

PRIMING:

Vacuum the substrate before priming and make sure it is dry. The use of HT PRIMER is recommended in all applications of STONLINER 677. This ensures maximum product performance. (NOTE: HT PRIMER must remain tacky during installation of STONLINER 677.)

APPLICATION:

STONLINER 677 is mixed, just prior to use, and must be immediately applied over the freshly primed surface. Application is as follows:

Mortar:

Empty Part A and Part B into a 5 gallon mixing container. Premix using a heavy-duty, slow-speed drill (400-600 rpm) with a Jiffy Mixer (#87027) for 2-3 minutes. Place the container on a J.B. Blender (#88002), gradually add the Part C (Stonliner Mortar Part C for horizontal surfaces and Stonliner Vertical Mortar Part C for vertical surfaces) and mix for approximately 90 seconds.

Apply the mortar onto the substrate with a notched trowel (#87038). Care must be taken to ensure material is evenly distributed over the substate with no clumps or ridges present before embedding the engineering fabric.

Engineering Fabric:

After applying the mortar, place the engineering fabric onto the wet material. Overlap any adjacent fabric at a minimum of 1/2 inch/ 13 mm. Immediately apply saturant.

Saturant:

Empty Part A and Part B into a 5 gallon mixing container and mix using a heavy-duty, slow-speed drill (400-600 rpm) with a Jiffy Mixer (#87027) for 2-3 minutes. Apply saturant to engineering fabric using a saturated short nap roller (#88065). Apply just enough saturant to make the fabric lose its white color. When the fabric is completely saturated, roll with a ribbed roller to release any air pockets in the reinforcement (2 inch diameter ribbed roller (#88071) for large, open areas, 1 inch diameter ribbed roller (#88070) for tight spots and corners). Allow to cure for 4-6 hours before proceeding.

Topcoat:

After allowing the saturant to cure, lightly grind the surface to eliminate any protruding reinforcing fibers, then vacuum the area completely.

Mechanically mix the Part A and Part B in a 5 gallon mixing container using a heavy-duty, slow-speed drill (400-600 rpm) with a Jiffy Mixer (#87026) for 2-3 minutes. Dip roller into the 5 gallon mixing container and roll material onto vertical and horizontal surfaces to a 10-12 mil thickness.

CURING:

The surface of STONLINER 677 will be tack free in 4-6 hours at 70°F/21°C. The coated area may be put back in service in 24 hours at 70°F/21°C. Ultimate physical characteristics will be achieved in 7 days.

RECOMMENDATIONS:

- STONHARD HEAVY DUTY CLEANER is recommended as an industrial detergent for removal of most contaminants.
- Apply only on clean, sound, dry and properly prepared substrate.
- Minimum ambient and surface temperatures are 55°F/13°C at the time of application.
- Maximum surface temperatures should not exceed 90°F/32°C during time of application
- Substrate temperature should be greater than 5° above dew point.
- Application and curing times are dependent upon ambient conditions. Consult Stonhard if conditions are not withing recommended guidelines.

PRECAUTIONS:

- Toluene or Xylene solvents are recommended for clean up of STONLINER 677 material spills. Use these materials only in strict accordance with manufacturers' recommended safety procedures. Dispose of waste materials in accordance with Government Regulations.
- The use of a NIOSH/MSHA approved respirator using #TC-23C-738 organic vapor or #TC-23C-740 organic vapor, acid gas cartridge is mandatory.

- The use of protective clothing such as long sleeve shirts, safety goggles and impervious latex gloves is highly recommended.
- In case of contact, flush area with water for 15 minutes and seek medical attention. Wash skin with soap and water.
- Use only with adequate ventilation.

NOTES:

- Material Safety Data Sheets on STONLINER 677 are available on request.
- Specific information regarding chemical resistance of STONLINER 677 is available in the "600 SERIES CORROSION RESISTANCE GUIDE".
- A staff of technical service engineers is available to assist in product application, or answer questions related to Stonhard products.
- Requests for technical literature or service can be made through local sales representatives and offices, or corporate offices located throughout the world.

STONCHEM 656

PRODUCT DATA

STONCHARD

ON WALLS – Tank Farm #6

PRODUCT DESCRIPTION:
STONCHEM 656 is a highly cross-linked novolac epoxy system applied at a nominal thickness of 60 mils/1.5 mm. The resin, engineering fabric, mortar-coat, mineral composite topcoat sequencing provides a smooth, heavy-duty chemical barrier which is resistant to small static cracks and moderate thermal shock. The STONCHEM 656 has excellent resistance to concentrated sulfuric acid, chlorinated solvents and caustics.

TYPICAL USES, APPLICATIONS:
- Secondary Containment Areas / Tank Farms
- Concrete Sumps, Vaults and Trenches
- Pump Pads and Pedestals
- Storage Tanks
- Neutralization Pits

PRODUCT ADVANTAGES:
- Excellent chemical resistance to concentrated sulfuric acid, chlorinated solvents and caustics.
- Engineering fabric resists cracking.
- Mortar-coat for added abrasion resistance.
- Mineral composite topcoat for increased impermeability.
- Factory proportioned units for easy application.

CHEMICAL RESISTANCE:
STONCHEM 656 is formulated to resist a variety of chemical solutions. Please refer to the 600 SERIES CORROSION RESISTANCE GUIDE which lists reagent concentration and temperature recommendations for each product.

PACKAGING:
STONCHEM 656 is supplied as a pre-measured unit for easy handling and eliminates on-site proportioning. Each unit consists of:

600 SERIES SATURANT: 1 carton, 6 containers of Part A (liquids)
1 carton, 6 containers of Part B (liquids)

PHYSICAL / CHEMICAL CHARACTERISTICS

Tensile Strength.....11,000 psi
(ASTM D-307)
Flexural Strength.....12,000 psi
(ASTM C-580)
Flexural Modulus of Elasticity.....6.0×10^5 psi
(ASTM D-790)
Hardness.....85-90
(ASTM D-2240 / Shore D Durometer)
Bond Strength.....>400 psi
(ACI Committee #503/PP. 1139-1141) (concrete failure)
Abrasion Resistance.....0.07 gm. max weight loss
(ASTM D-4060, CS-17 Wheel)
Thermal Coefficient of Linear Expansion.....2.2×10^{-5} in/in-°C
(ASTM E-381)
Shelf Life@70°F/21°C.....1 year
Color.....Gray
Gel Time@70°F/21°C.....
Base Coat.....20 minutes
Saturant Coat.....20 minutes
Topcoat.....20 minutes

ENGINEERING FABRIC: One 200 sq ft/18.58 sq m roll

600 SERIES MORTAR-COAT: 1 carton, 3 containers of Part A (liquids)
3 containers of Part B (liquids)
3 bags aggregate

600 SERIES TOP COAT: 2 cartons, 2 containers of Part A (liquids)
2 containers of Part B (liquids)

COVERAGE:
Each unit of STONCHEM 656 will cover approximately 180 sq ft/16.72 sq m at an application thickness of 60 mils/ 1.5 mm.

STORAGE CONDITIONS:
Store all components of STONCHEM 656 between 50°F/10°C and 75°F/24°C in a dry area, out of direct sunlight. PLEASE HANDLE AND STORE PROPERLY. The fiberglass mat must be free of contaminants and moisture to ensure maximum mechanical and chemical performance.

CONCRETE PREPARATION:
All loose fragments, unsound concrete, laitance, oil, dirt and grease must be removed prior to applying any Stonhard overlayment.
Loose and unsound concrete is removed using chipping hammers or a hammer and chisel.
All laitance must be removed by abrasive blasting or scarifying. When laitance exists, concrete has a very dense and smooth surface. A laitance free surface will have an "open" appearance like rough sand paper due to the exposed particles of sand.
Oil, dirt and grease are removed by abrasive blasting or scarifying. If oil, dirt and grease are not completely removed with the mechanical preparation, scrub the contaminated area with industrial cleanser and a mechanical or hand wire brush.
When all mechanical preparation and scrubbing is complete, vacuum the area with an industrial wet/dry vacuum to remove dirt and dust.
Other methods of concrete preparation require manufacturer's approval.

PRIMING:
Vacuum the substrate before priming and make sure the surface is dry. The use of HT PRIMER is necessary in all applications of STONCHEM 656. This ensures maximum product adhesion and performance. (NOTE: HT PRIMER must be tack free prior to application of STONCHEM 656.)

APPLICATION:
STONCHEM 656 is mixed, just prior to use, and must be immediately applied over the tack free, primed surface. Application is as follows:

Saturant Base Coat:
Mix Part A and Part B using a heavy-duty, slow-speed drill (400-600 rpm) with a Jiffy Mixer (#87027) for 2-3 minutes. Apply saturant liquids to the substrate using a 15 mil notched rubber squeegee(#88039). Leaving puddles at this sequence could lead to over saturating the engineering fabric.

Engineering Fabric:
After applying the saturant, place the engineering fabric onto the wet material. Overlap any adjacent fabric at a minimum of 1/2-inch/13 mm. Immediately apply second

Saturant:
Immediately mix Part A and Part B using a heavy-duty, slow-speed drill (400-600 rpm) with a Jiffy Mixer (#87027) for 2-3 minutes. Apply more saturant to engineering fabric using a saturated short nap roller (#88065). Apply just enough saturant to make the fabric lose its white color. When the fabric is completely saturated, roll with a ribbed roller to release any air pockets in the reinforcement (2-inch diameter ribbed roller (#88071) for large, open areas, 1-inch diameter ribbed roller (#88070) for tight spots and corners). Allow to cure for 4-6 hours before proceeding.

Mortar-Coat:
After allowing the saturant to cure, lightly grind the surface to eliminate any protruding reinforcing fibers, then vacuum the area completely.
Mechanically premix the Part A and Part B using a heavy-duty, slow-speed drill (400-600 rpm) with a Jiffy Mixer (#87026) for 2-3 minutes. Next, using the same drill and Jiffy Mixer, add in the Stonchem Scratchcoat Part C and mix for 2-3 minutes.
Apply the mortar-coat to vertical and horizontal surfaces using a 30 mil notched rubber squeegee (#88038). Finish with a 14" flat rubber squeegee (#88066) by pulling extremely tight across the surface of the wet mortar-coat. Not pulling tight enough will result in an un-smooth system.

Topcoat:
After allowing the mortar-coat to cure, lightly grind any areas with ridges or squeegee marks. Vacuum the area completely.
Mechanically mix the Part A and Part B in a 5 gallon mixing container using a heavy-duty, slow-speed drill (400-600 rpm) with a Jiffy Mixer (#87026) for 2-3 minutes. Dip roller into the 5 gallon mixing container and roll material onto vertical and horizontal surfaces to a 10-12 mil thickness.

CURING:
The surface of STONCHEM 656 will be tack free in 4-6 hours at 70°F/21°C. The coated area may be put back in service in 24 hours at 70°F/21°C. Ultimate physical characteristics will be achieved in 7 days.

RECOMMENDATIONS:
- STONHARD HEAVY DUTY CLEANER is recommended as an industrial detergent for removal of most contaminants found on concrete.
- Apply only on clean, sound, dry and properly prepared substrate.
- Minimum ambient and surface temperatures are 55°F/13°C at the time of application.
- Maximum surface temperatures do not exceed 90°F/32°C during time of application.
- Substrate temperature is greater than 5° above dew point.
- Application and curing times are dependent upon ambient and surface conditions. Please consult Stonhard if conditions are not within recommended guidelines.

PRECAUTIONS:

- Toluene or Xylene solvents are recommended for clean up of STONCHEM 656 material spills. Use these materials only in strict accordance with manufacturers' recommended safety procedures. Dispose of waste materials in accordance with Government Regulations.
- The use of a NIOSH/MSHA approved respirator using #TC-23C-738 organic vapor or #TC-23C-740 organic vapor, acid gas cartridge is mandatory.
- The selection of proper protective clothing and equipment will significantly reduce risk to injury. Body covering apparel, safety goggles and impermeable gloves are highly recommended.
- In case of contact, flush area with water for 15 minutes and seek medical attention. Wash skin with soap and water.
- Use only with adequate ventilation.

NOTES:

- Material Safety Data Sheets on STONCHEM 656 are available on request.
- Specific information regarding chemical resistance of STONCHEM 656 is available in the "600 SERIES CORROSION RESISTANCE GUIDE".
- A staff of technical service engineers is available to assist in product application, or answer questions related to Stonhard products.
- Requests for technical literature or service can be made through local sales representatives and offices, or corporate offices located throughout the world.

KEL-PAR COMPANY, INC.
MECHANICAL CONTRACTORS
6080 JACKSONTOWN RD., S.E.
NEWARK, OHIO 43056-9375

PH: (614) 323-0259
FAX: (614) 323-1224

December 5, 1994

Safety Kleen Corp.
581 Milliken Dr.
Hebron, Ohio 43025

Attn: Mr. Gerritt Konink

Dear Mr. Konink,

In regards to the Hydropulper project. We made modifications to Tanks 96 & 98 , installed the hydropulper vessel and all piping, augers and other anciliary equipment.

In accordance with OAC 3745-66-92 (D). Prior to placing the system in use we inspected the entire system for tightness. This includes the Hydropulper, tanks 96 & 98, the solids bin, and all piping, augers and other ancililary equipment. No leaks or other deficiencies were found.

I certify under penalty of law that this document and all attachments were prepared under my direction or supervision in accordance with a system designed to assure that qualified personnel properly gathered and evaluated the information submitted based on the inquiry of the person or persons who managed the system or those persons directly responsible for gathering the information, the information submitted is to the best of my knowledge and belief true, accurate and complete. I am aware that there are significant pennalties for submitting false information, including the possibility of fine and imprisonment for knowing violations.

Sincerely,

James L. Dickson

James L. Dickson

JLM

Original Red-lined to Chris 12/5/94 GK

MAS
MAINTENANCE ANALYSIS SYSTEMS, INC.
PREDICTIVE MAINTENANCE COMPANY • P.O. BOX 652 • NEWARK, OHIO 43055 • 614/344-5888 • FAX 614/344-5805

October 17, 1994

Mr. Gerrit Konink
Plant Engineer
SAFETY-KLEEN
581 Milliken Dr.
Hebron, Ohio 43025

Dear Mr. Konink:

In August and September 1994 MAINTENANCE ANALYSIS SYSTEMS performed ultrasonic thickness testing of storage bin #2 that will be used in the new HYDRAPULPER installation at your Hebron facility. All testing was performed with a PANAMETRICS model DL26 ultrasonic thickness gage. The unit was calibrated per manufacturers specifications, using steel welded to the tanks as the calibration blocks. All test pieces were measured using a micrometer and all were the same temperature as the tanks.

First an internal inspection was performed by Michael L. Anderson, a professional engineer. Some sections had significant rust build up so an external ultra sonic thickness testing plan well in excess of the AMERICAN PETROLEUM INSTITUTE specifications as defined in API "GUIDE FOR INSPECTION OF REFINERY EQUIPMENT" chapter 13, section 13.4.2.9. was then performed.

Based our previous testing experience and the API specifications we considered any point with less then 0.200 of thickness to be a potential future problem. Any point with less then 0.100 in of thickness would have been considered an immediate problem but no thickness readings of less than 0.100 were measured.

Per my internal inspection the top had a rust buildup around the top and a crescent of the worst corrosion was in the north east corner. This was one of the areas that had numerous ultra sonic thickness readings taken. They are shown in the associated sketch and on the readings list as the 8000 series readings. Only one of the readings (#8004 at 0.199 inch) was below 0.200 inch in thickness. This is a minor problem at present.

Position #1004 had much lower thickness reading. This was near the manhole by the north west corner of the top. Readings 1301 to 1306 were then taken around point 1004 and three more points were found to be below 0.200. They are points 1304 at 0.175 inch, 1305 at 0.165 inch and 0.121 at 1306 inch. These were taken in a 12 inch radius circle around position #1004. All other readings near these positions were above 0.200 with most showing little or no material loss from the nominal 0.250 original plate thickness.

According to the API standard 650 this top can be allowed to

corrode almost all the way through from a functional standpoint. This may present a future safety problem, however, so we recommend future thickness testing be performed to determine the rate of material loss these two sections and the rest of the top is experiencing in this new application for this bin.

The north east corner of the side wall was also noted during my internal inspection as a bad spot. The worst area had forty thickness readings taken. They are the readings 7001 through 7040. One position (7016) on the east wall has a reading of 0.159 inch. All readings around it on this side were above 0.225 but position #7031 on the north wall and within 24 inches of this reading did have a thickness of 0.201.

Point 2027 near the bottom of the east wall also had a relatively thin reading of 0.209 inch. These sidewall readings show some material loss. The rate of loss must be determined by future readings and will define the potential future problems that the bin will experience.

Based on both my internal survey and the external survey that I supervised no problems were found that will preclude the Bin #2 to be used for the new Hydrapulper installation form being put into service.

I certify under penalty of law that this document, and all attachments, were prepared under my direction or supervision. The data gathering was also performed under my direction and supervision by qualified personnel with a system designed to assure proper gathering and evaluation of the data. To my knowledge the information contained in these reports is true, accurate, and complete. I wrote all the reports.

I am aware that there are significant penalties for submitting false information. If you have and questions or if we can be of any further help, please give me a call.

Sincerely,
MAINTENANCE ANALYSIS SYSTEMS

Michael L. Anderson, P.E.
President.

TY KLEEN BIN --THICKNESS READINGS IN INCHES

#	THICKNESS
N BOTTOM	
1	0.371
2	0.358
3	0.367
4	0.364
5	0.365
6	0.371
7	0.371
8	0.359
9	0.368
10	0.367
11	0.374
12	0.378
13	0.355
14	0.358
15	0.353
16	0.374
17	0.367
18	0.373
19	0.358
20	0.367
21	0.376
22	0.378
23	0.374
24	0.345
25	0.379
26	0.375
27	0.364
28	0.372
29	0.365
30	0.373
31	0.364
32	0.371
33	0.373
34	0.379
35	0.364
36	0.379
37	0.383
38	0.379
39	0.377
40	0.366
41	0.379
42	0.348
43	0.372
44	0.368
45	0.347
46	0.367
47	---
48	0.357
49	0.368
50	0.366
51	0.373
52	0.355

55	0.365
56	0.375
57	0.363
58	0.372
59	0.376
60	0.372
61	0.372
62	0.379
63	0.375
64	0.376
65	0.374
66	0.354
67	0.36
68	0.374
69	0.379
70	0.372
71	0.373
72	0.37
73	0.376
74	0.379
75	0.374
76	0.377
77	0.379
78	0.373
79	0.358
80	0.372
81	0.363
82	0.372
83	0.371
84	0.372
85	0.363
86	0.368
87	0.374
88	0.358
89	0.363
90	0.372
91	0.372
92	0.363
93	0.371
94	0.371
95	0.371
96	0.371
97	0.376
98	0.366
99	0.376
100	0.376
101	0.365
102	0.374
103	0.369
104	0.368
105	0.373
106	0.362
107	0.378
108	0.373

IN TOP

1001	0.245
1002	0.246
1003	0.241
1004	0.123
1005	0.241
1006	0.229
1007	0.23

1011	0.24
1012	0.241
1013	0.243
1014	0.239
1015	0.235
1016	0.243
1017	0.237
1018	0.232
1019	0.251
1020	0.25
1021	0.256
1022	0.245
1023	0.24
1024	0.257
1025	0.246
1026	0.24
1027	0.229
1028	0.247
1029	0.245
1030	0.243
1031	0.227
1032	0.24
1033	0.248
1034	0.245
8001	0.253
8002	0.252
8003	0.25
8004	0.199
8005	0.243
8006	0.202
8007	0.218
8008	0.25
8009	0.248
8010	0.241
8011	0.242
8012	0.248
8013	0.218
1301	0.247
1302	0.242
1303	0.206
1304	0.175
1305	0.165
1306	0.121

EST SIDE

3001	0.258
3002	0.256
3003	0.251
3004	0.247
3005	0.244
3006	0.254
3007	0.254
3008	0.251
3009	0.255
3010	0.256
3011	0.249
3012	0.251
3013	0.252
3014	0.243
3015	0.249
3016	0.247
3017	0.25

5050	0.229
5051	0.241
5052	0.24
5053	0.23
5054	0.234

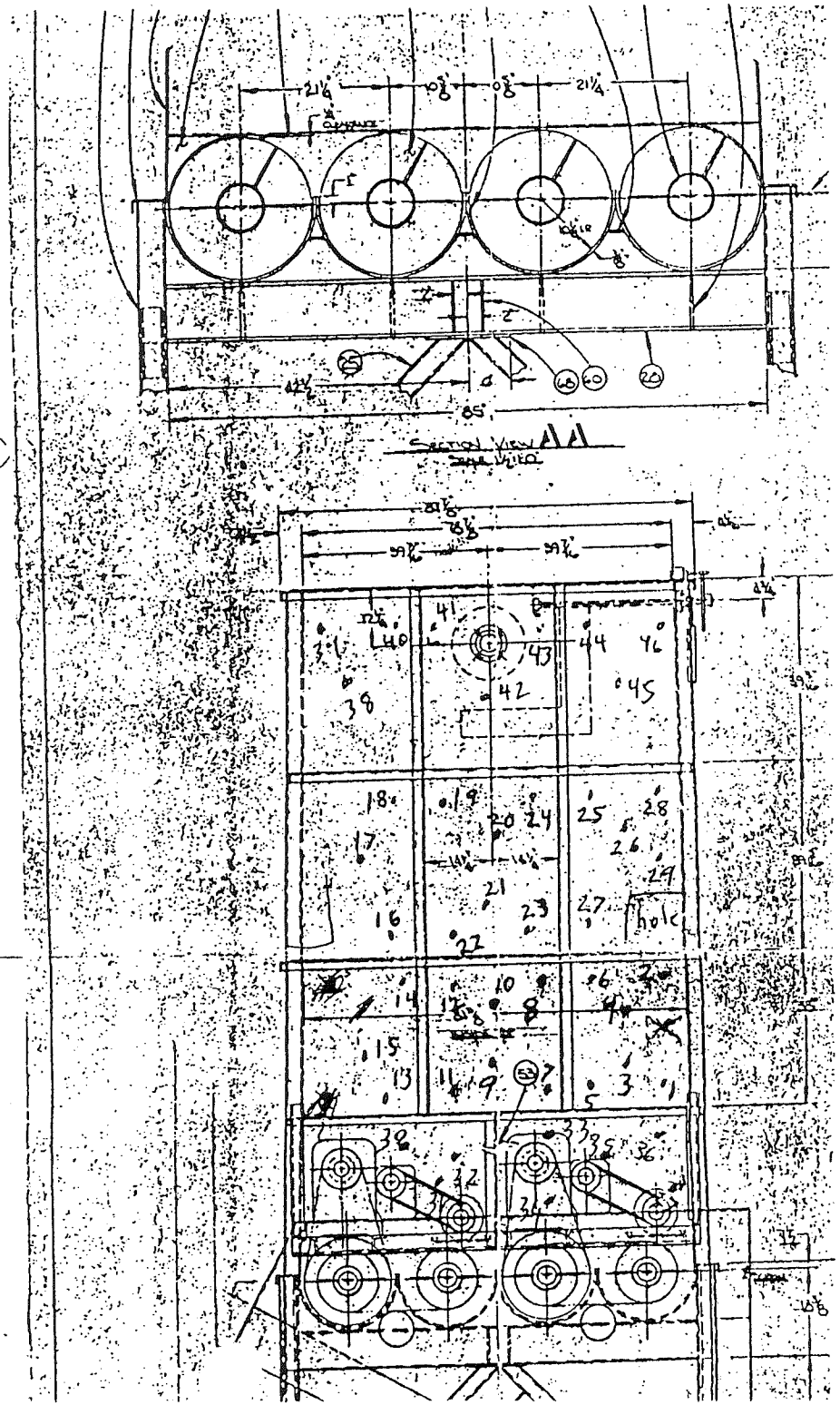
Section View AA
Same View
hole

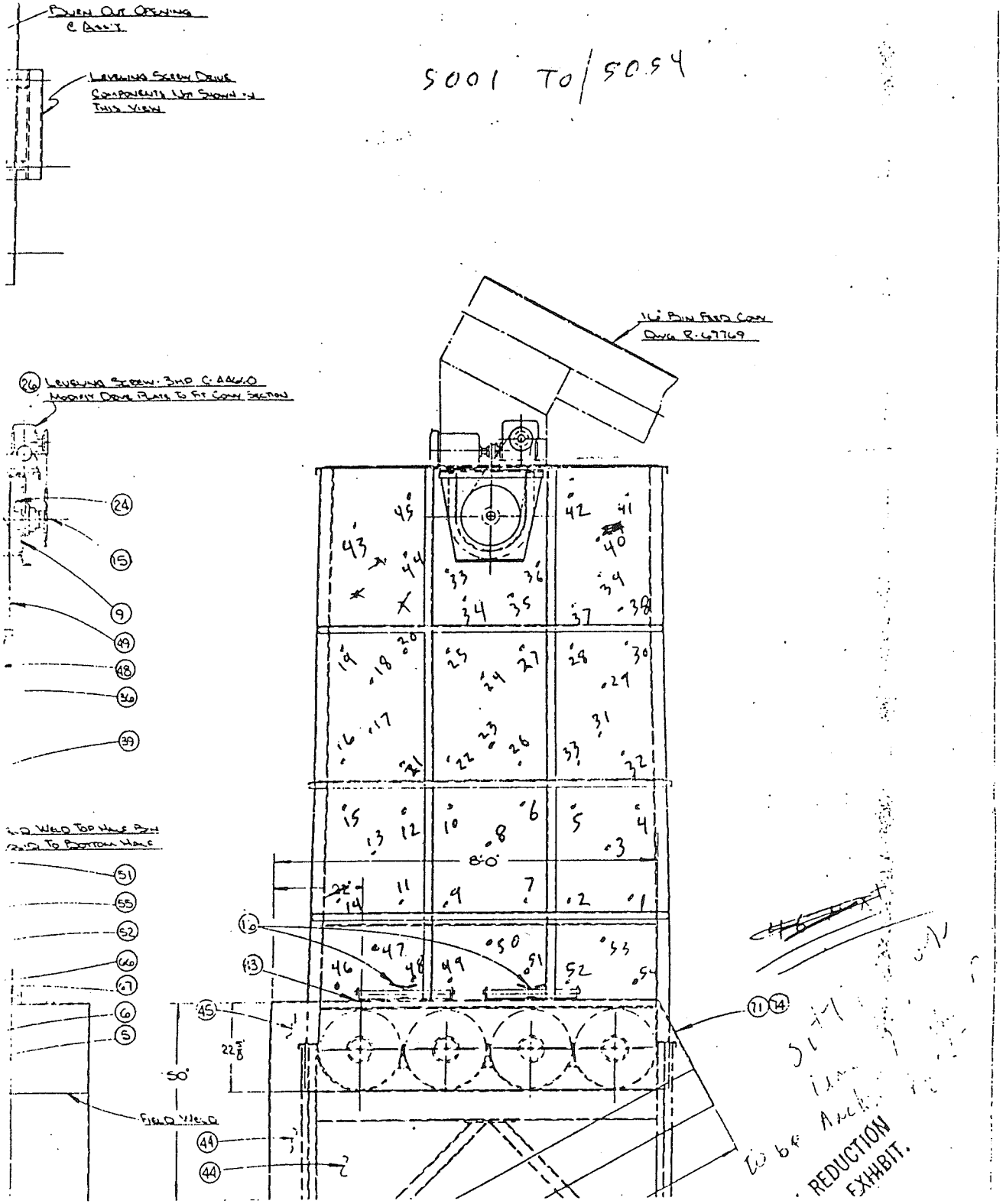
5001 TO 5054
BURN OUT OPENING C ASS'Y.
LEVELING SCREW DRIVE COMPONENTS NOT SHOWN IN THIS VIEW
16' BIN FEED CONV DWG R-67769
26 LEVELING SCREW. 3HP C. ASS'Y.
MODIFY DRIVE PLATE TO FIT CONV SECTION
24
15
9
49
48
36
39
FIELD WELD TOP HALF BIN PLATE TO BOTTOM HALF
51
55
52
66
67
6
5
50'
22 3/8
FIELD WELD
44
44
45
13
10
71
74
8'-0"
REDUCTION EXHIBIT.

1 = 0001 To 0026
2 = 0027 To 0054
3 = 0055 To 0081
4 = 0082 To 0108

BOT
0001
To

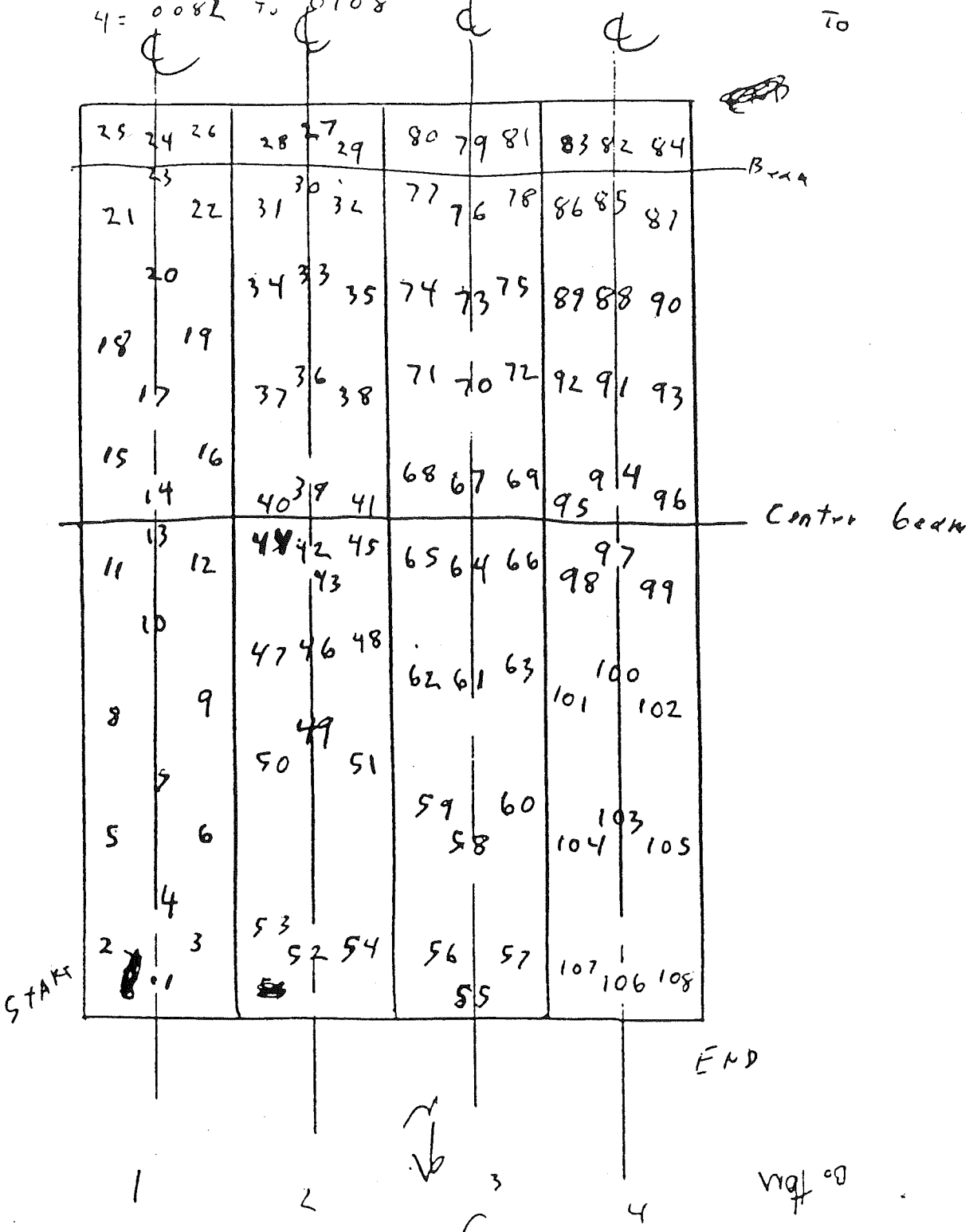

bldg

Vrgl 08

0-108

west side

20 - WEST SIDE

3001 To 3065

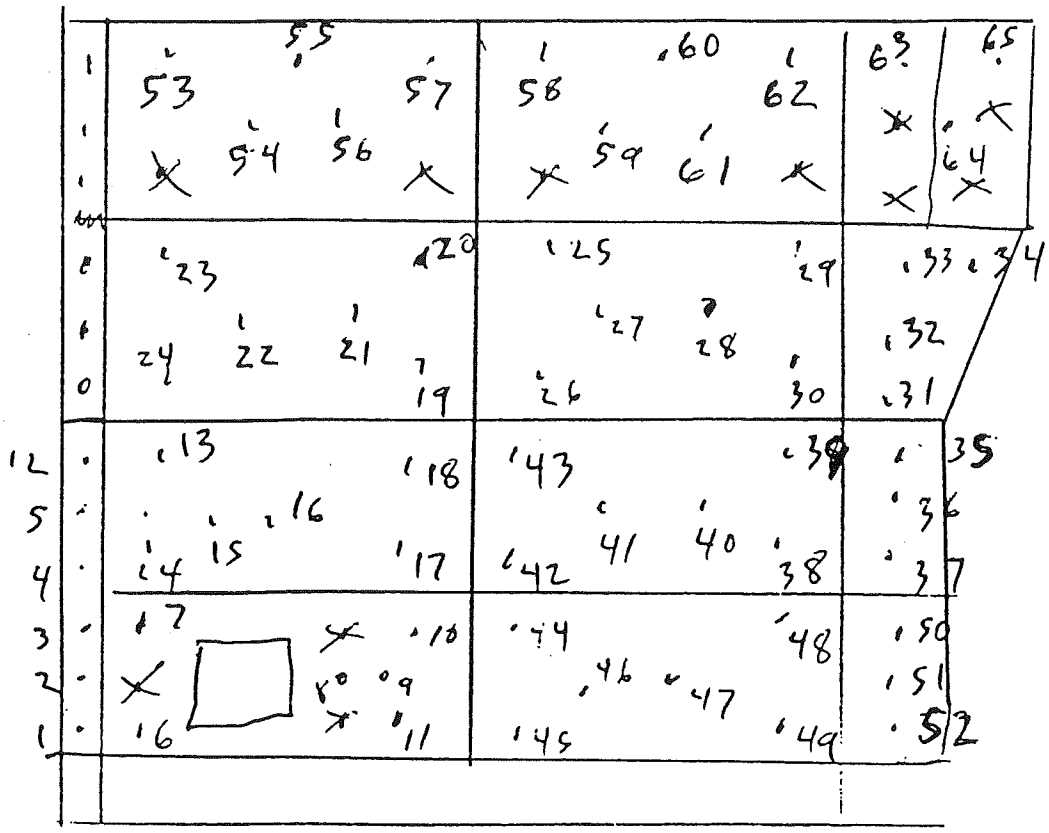

52

East side

10 = EAST SIDE

2001 TO 2063

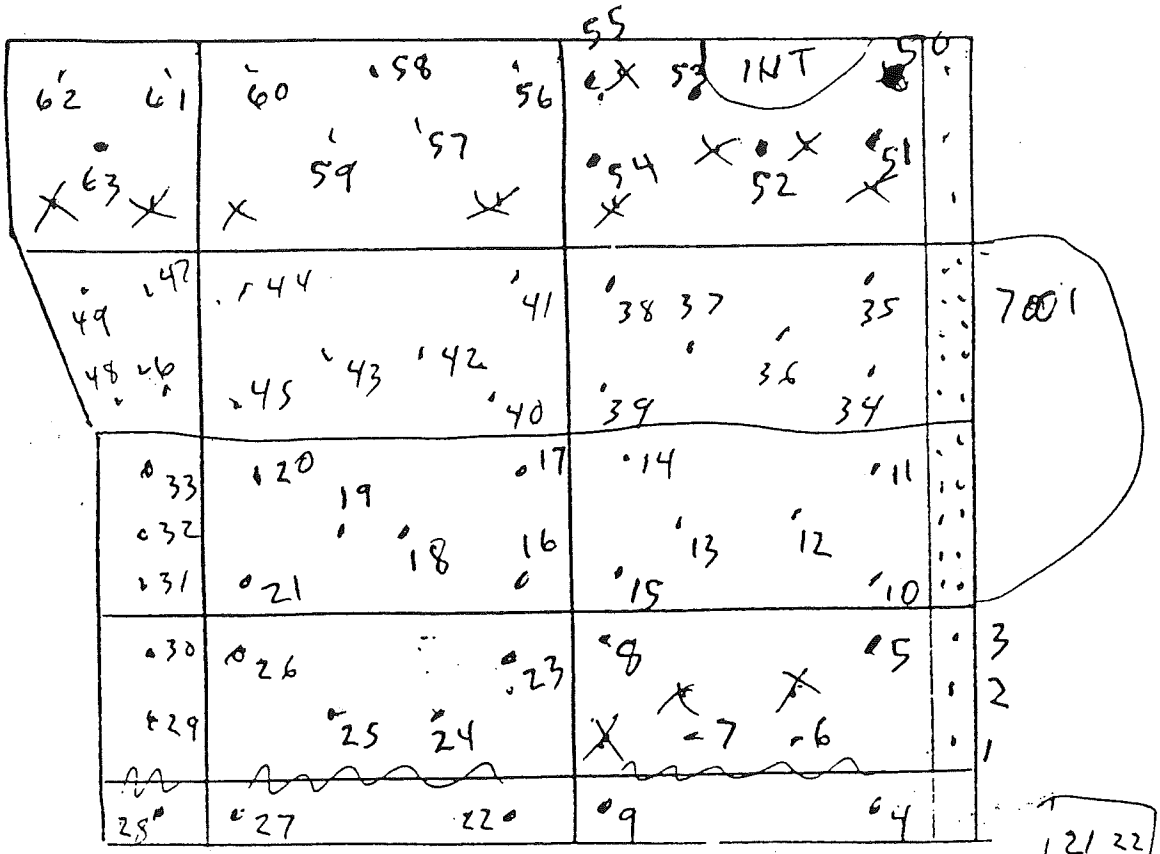

6001 TO 6009

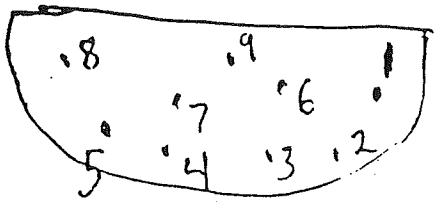

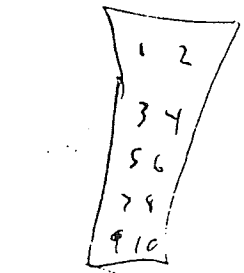

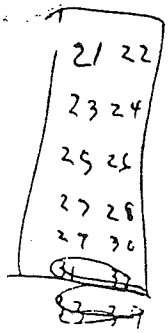

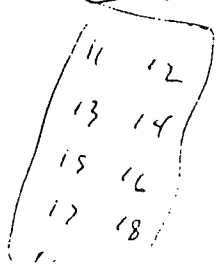

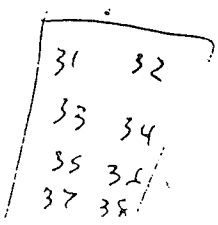

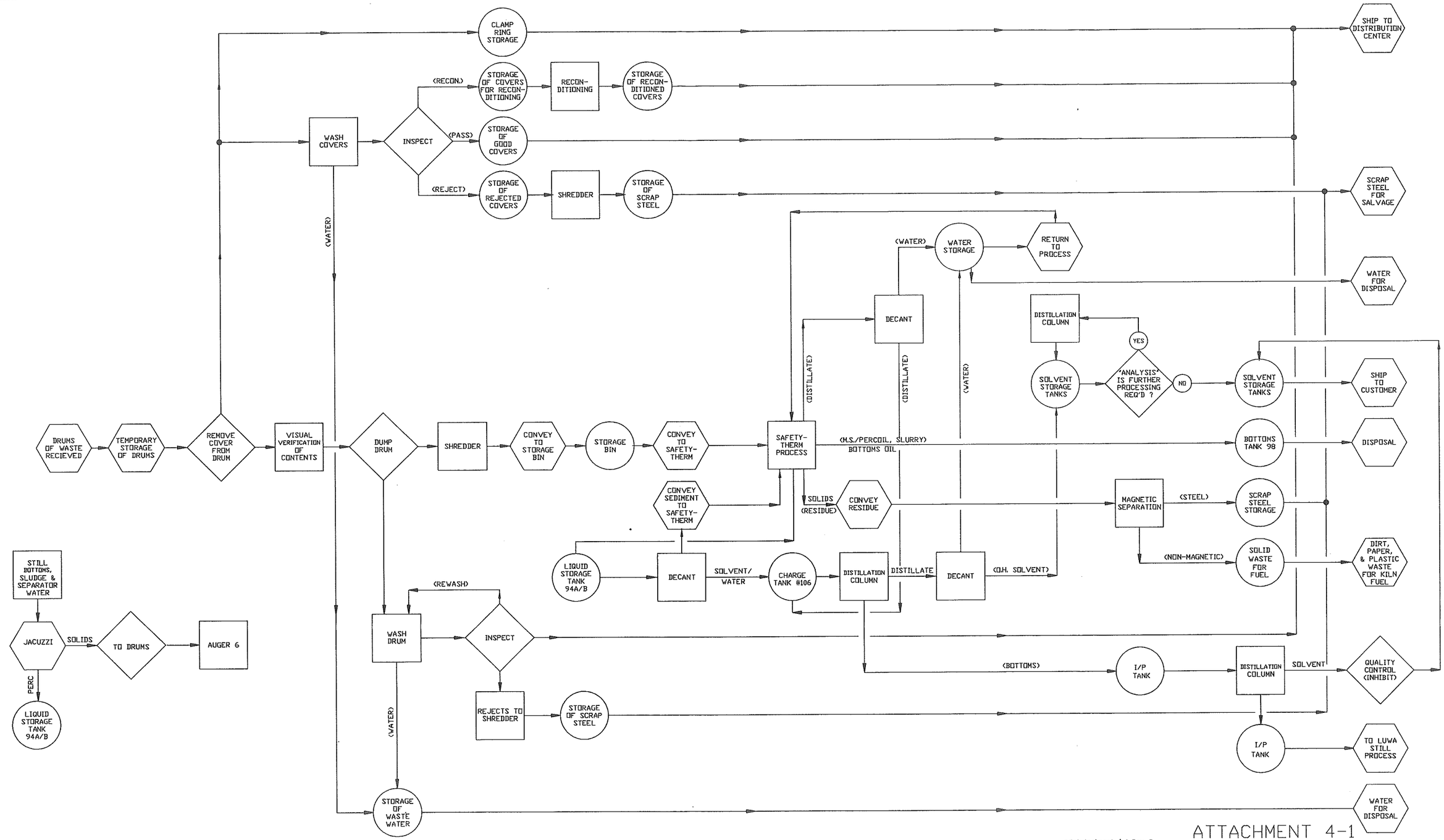

ATTACHMENT 4-1

DF=Attachment 4-1 Rev. 3

NO.	DESCRIPTION	BY	CK	APPR	DATE
3	RCRA PERMIT RENEWAL UPDATE	KMC			12/12/14
2	REVISED FOR PERMIT RENEWAL	SWL			8/19/02
1	REVISED PER NOD 1995	RDK	KJM	TS	5/30/95
0	ISSUED FOR PART "B" PERMIT	CEW	KJM	TS	9/20/90

REVISIONS

PROCESS FLOW DIAGRAM FOR DRY CLEANING WASTE

CleanHarbors

501 MILLIKEN DRIVE, HEBRON, OHIO 43025 PHONE (740) 929-3532

SCALE	DRAWN	CHECKED	PROJ. ENG. APPR.	OPERATION APPR.	DATE
NONE	CEW	KJM	TS		9/19/90

HEBRON, OHIO RECYCLE CENTER

DRAWING NO. 90-64200-113

REV. 3

THIS DRAWING CONTAINS INFORMATION PROPRIETARY TO CLEAN HARBORS. ANY REPRODUCTIONS, DISCLOSURE OR USE OF THIS DRAWING IS EXPRESSLY PROHIBITED EXCEPT BY CLEAN HARBORS OR AS CLEAN HARBORS MAY AGREE IN WRITTING.

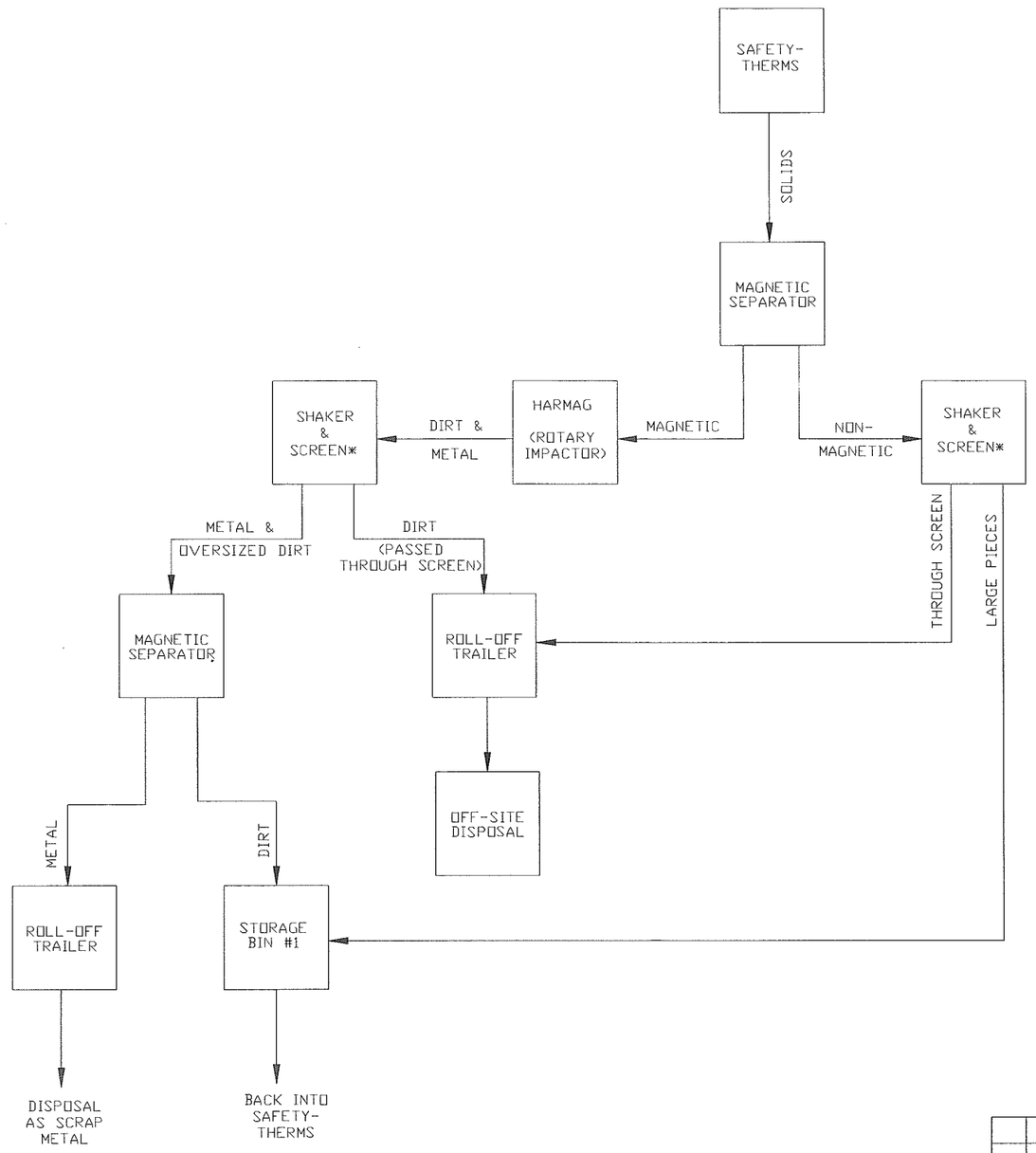

* SCREEN SIZE DEPENDANT ON DISPOSAL METHOD

THIS DRAWING CONTAINS INFORMATION PROPRIETARY TO CLEAN HARBORS. ANY REPRODUCTIONS, DISCLOSURE OR USE OF THIS DRAWING IS EXPRESSLY PROHIBITED EXCEPT BY CLEAN HARBORS OR AS CLEAN HARBORS MAY AGREE IN WRITTING.

DF=Attachment 4-1A Rev. 2

ATTACHMENT 4-1A

NO.	DESCRITION	BY	CK	APPR	DATE
2	RCRA PERMIT RENEWAL UPDATE	KMC			12/12/14
1	REVISED FOR PERMIT RENEWAL	SWL			8/19/02
0	ISSUED FOR NOD 1995	RDK	KJM	TS	5/30/95

REVISIONS

PROCESS FLOW DIAGRAM FOR DRY CLEANING WASTE

CleanHarbors

581 MILLIKEN DRIVE, HEBRON, OHIO 43025 PHONE (740) 929-3532

SCALE	DRAWN	CHECKED	PROJ. ENG. APPR.	OPERATION APPR.	DATE
NONE	RDK	KJM	TS		5/31/95

HEBRON, OHIO RECYCLE CENTER

DRAWING NO. 90-64200-113A

REV. 2

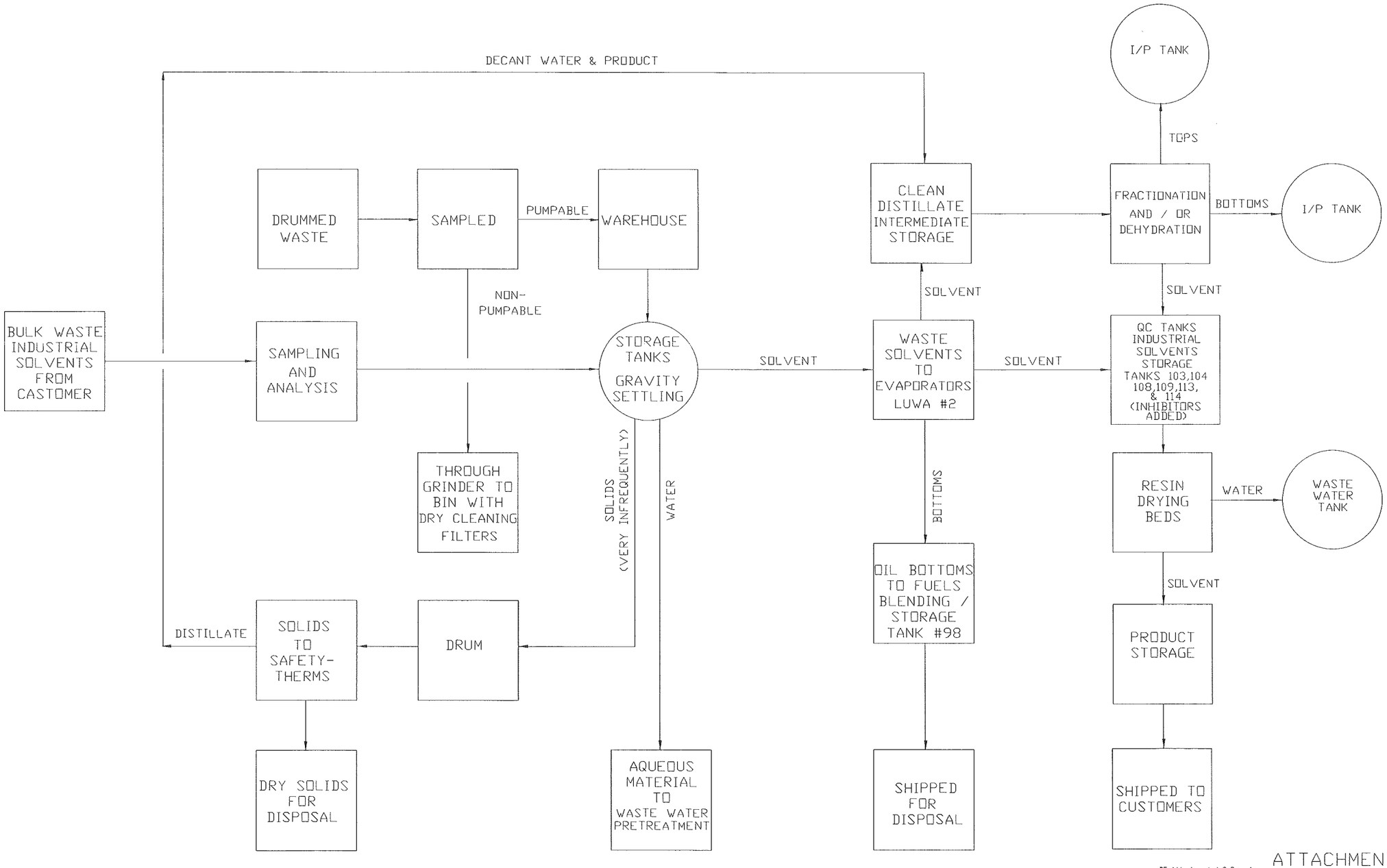

ATTACHMENT 4-2

DF=Attachment 4-2 Rev. 4

NO.	DESCRITION	BY	CK	APPR	DATE
4	RCRA PERMIT RENEWAL UPDATE	KMC			12/12/14
3	REVISED FOR PERMIT RENEWAL	SWL			8/20/02
2	REVISED PER NOD 1995	MBH	KJM	CL	5/31/95
1	ISSUED FOR PART 'B' PERMIT NOD	RDK	KJM	TS	2/25/92
0	ISSUED FOR PART 'B' PERMIT	CEW	KJM	TS	9/20/90

REVISIONS

PROCESS FLOW DIAGRAM FOR BULK REGULATED WASTE F001, F002, F003, F004, & F005

CleanHarbors

581 MILLIKEN DRIVE, HEBRON, OHIO 43025 PHONE (740) 929-3532

SCALE	DRAWN	CHECKED	PROJ. ENG APPR.	OPERATION APPR.	DATE
NONE	CEW	KJM	TS		9/20/90

HEBRON, OHIO RECYCLE CENTER

DRAWING NO. 90-64200-116

REV. 4

THIS DRAWING CONTAINS INFORMATION PROPRIETARY TO CLEAN HARBORS. ANY REPRODUCTIONS, DISCLOSURE OR USE OF THIS DRAWING IS EXPRESSLY PROHIBITED EXCEPT BY CLEAN HARBORS OR AS CLEAN HARBORS MAY AGREE IN WRITTING.

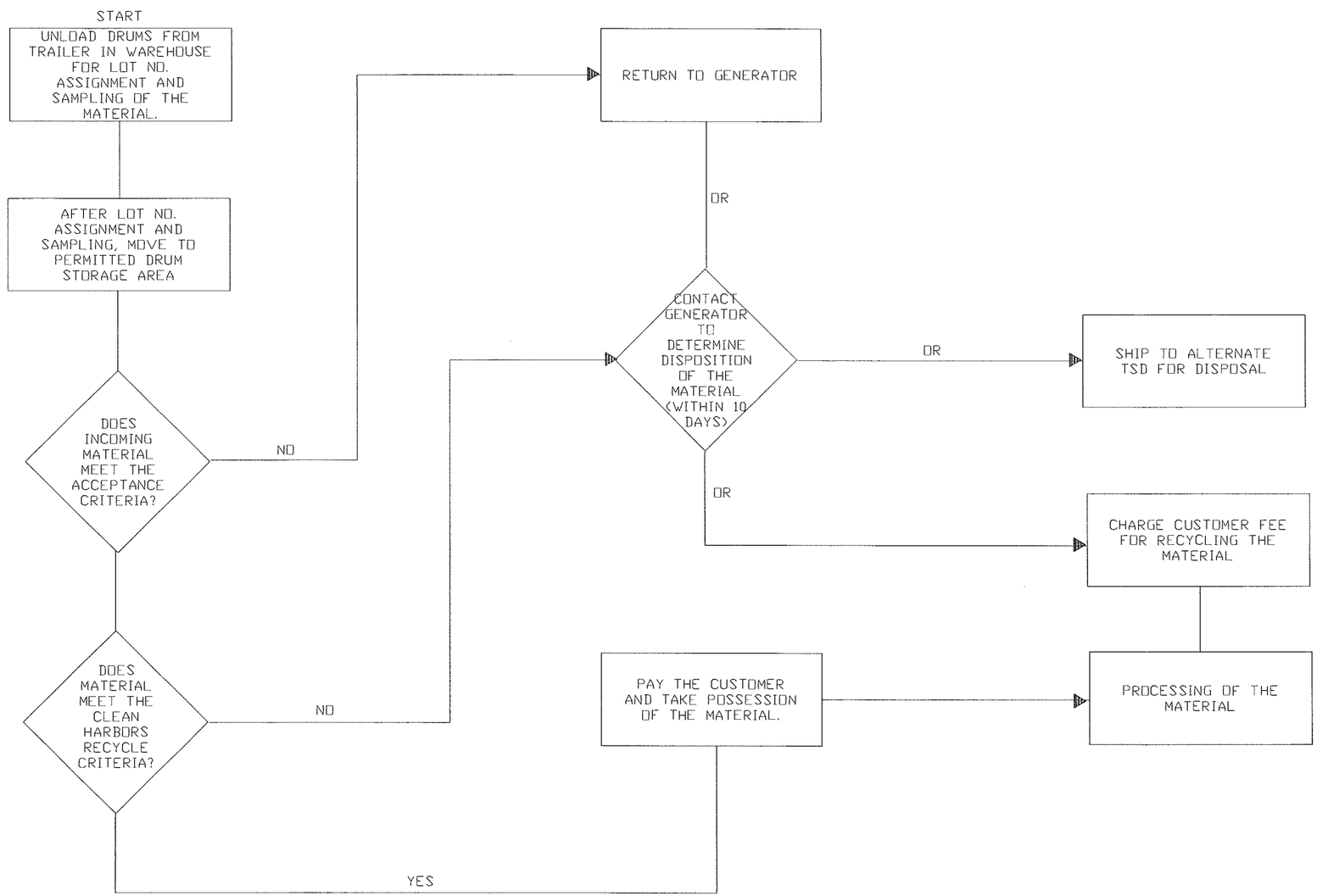

THIS DRAWING CONTAINS INFORMATION PROPRIETARY TO CLEAN HARBORS. ANY REPRODUCTIONS, DISCLOSURE OR USE OF THIS DRAWING IS EXPRESSLY PROHIBITED EXCEPT BY CLEAN HARBORS OR AS CLEAN HARBORS MAY AGREE IN WRITTING.

ATTACHMENT 4-3

DF=Attachment 4-3 Rev. 2

NO.	DESCRITION	BY	CK	APPR	DATE
2	RCRA PERMIT RENEWAL UPDATE	KMC			12/12/14
1	REVISED FOR PERMIT RENEWAL	SWL			8/20/02
0	ISSUED FOR PART "B" PERMIT	RDK	KJM	TS	9/20/90

REVISIONS

PROCESS FLOW DIAGRAM FOR REGULATED WASTES IN CONTAINER STORAGE

CleanHarbors
581 MILLIKEN DRIVE, HEBRON, OHIO 43025 PHONE (740) 929-3532

SCALE	DRAWN	CHECKED	PROJ. ENG. APPR.	OPERATION APPR.	DATE
NONE	RDK				9/19/90

HEBRON, OHIO RECYCLE CENTER

DRAWING NO. 90-64200-117

REV. 2

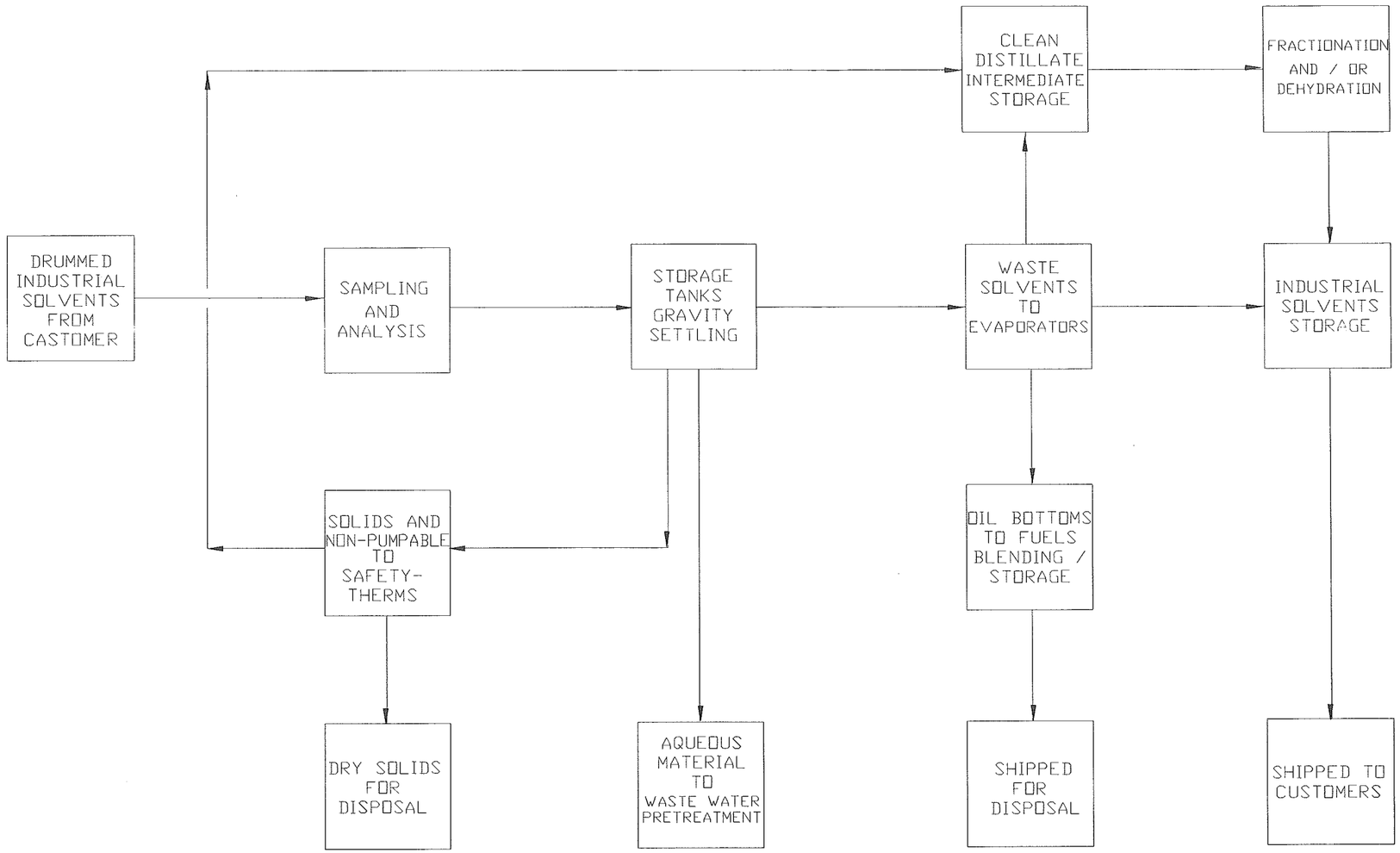

ATTACHMENT 4-3A

DF=Attachment 4-3A Rev. 4

NO.	DESCRITION	BY	CK	APPR	DATE
4	RCRA PERMIT RENEWAL UPDATE	KMC			12/12/14
3	REVISED FOR PERMIT RENEWAL	SWL			8/20/02
2	REVISED FOR PART B 1997	KJM			4/30/97
1	ISSUED FOR PART 'B' PERMIT NOD	RDK			5/30/95
0	ISSUED FOR PART 'B' PERMIT	RDK			9/20/90

REVISIONS

PROCESS FLOW DIAGRAM FOR REGULATED WASTES IN FUELS PROGRAM

CleanHarbors

581 MILLIKEN DRIVE, HEBRON, OHIO 43025 PHONE (740) 929-3532

SCALE	DRAWN	CHECKED	PROJ. ENG. APPR.	OPERATION APPR.	DATE
NONE	CEW				9/20/90

HEBRON, OHIO RECYCLE CENTER

DRAWING NO. 90-64200-117A

REV. 4

THIS DRAWING CONTAINS INFORMATION PROPRIETARY TO CLEAN HARBORS. ANY REPRODUCTIONS, DISCLOSURE OR USE OF THIS DRAWING IS EXPRESSLY PROHIBITED EXCEPT BY CLEAN HARBORS OR AS CLEAN HARBORS MAY AGREE IN WRITTING.

5

SECTION 5
GROUNDWATER MONITORING

5.1 INTRODUCTION

The information presented in this section is submitted to fulfill the requirements of Ohio Administrative Code (OAC) rule 3745-50-44(B). A brief summary of UST closure and site-wide corrective action, groundwater monitoring data, a description of the uppermost aquifer, the waste management area, residual impacts to groundwater quality, the groundwater monitoring program, and the compliance plan for the unit are summarized below.

5.1.1 UST CLOSURE SUMMARY

In December 1986, Clean Harbors (via original owner Safety-Kleen prior to 2008) submitted a closure plan to the Ohio EPA for the removal of four 10,000-gallon hazardous waste underground storage tanks (USTs) from the Hebron, Ohio Recycle Center (Tanks 18, 19, 20, and 21). Prior to their removal, the tanks were used to store RCRA-regulated waste liquids generated from the solvent collection and recycling process. The tanks were removed in 1988. Due to residual impacts to soil and groundwater, the former area was closed as a landfill. The closure certification for the unit was submitted on March 18, 1993 and was accepted by Ohio EPA on October 18, 1993. The groundwater is currently being monitored as part of the closure/post-closure plan approved by Ohio EPA on September 30, 1992.

5.1.2 CORRECTIVE ACTION SUMMARY

On November 27, 1985, a fire occurred in the Aboveground Storage Tank farm, which formerly existed east of well H-11S at the Wastewater Treatment Plant site (See Figure 5-1), resulting in the destruction of the tank farm and a release of an unknown quantity of solvent to soil, surface water and groundwater. Emergency response measures were implemented to contain the release, prevent off-site discharge and clean up solvent-affected media on site. The release caused groundwater contamination as a result of: 1) infiltration of contaminants into the UST backfill; 2) infiltration of contaminants in the storm sewer and storm sewer backfill, and; 3) permeation of native soil by contaminated surface runoff.

Clean Harbors (via original owner Safety-Kleen prior to 2008) worked with U.S. EPA to complete corrective action activities associated with the release, including: completion of a three-phase RCRA Facility Investigation, implementation of Interim Measures (groundwater recovery/treatment system and barrier wall), and Corrective Measures Study (see Section 10). On June 5, 1998, U.S. EPA issued a RCRA Final Decision that included the Final Decision, Response to Comments, Statement of Basis and Index to the Administrative Record. Transition of corrective action authority at the facility from U.S. EPA to Ohio EPA occurred with the issuance of the Part B Permit on June 30, 1998. Implementation of the selected remedies and remaining corrective action activities was required as a condition of the permit. In January 1999, installation of a separate water and soil vapor extraction (WSVE) system was completed to further reduce VOC concentrations in site soil and ground water.

The groundwater recover/treatment system and WSVE system are operated to address residual groundwater impacts associated with both the former USTs and site-wide corrective action activities related to the 1985 release. CLEAN HARBORS also performs semiannual groundwater quality monitoring events as part of both the UST post-closure and site-wide corrective action monitoring programs.

5.2 SUMMARY OF GROUNDWATER MONITORING DATA

Groundwater analytical data collected during previous investigations has been submitted to Ohio EPA. Quarterly groundwater monitoring reports were submitted from November 1992 through June 1998. From June 1998 to the present, semi-annual reports have been submitted. Table 5-1 provides a summary of past ground water monitoring data.

Well H-1S serves as the up-gradient/background monitoring well and wells, H-9S, H-10S, H-15S and H-15D serve as down-gradient monitoring wells for the purpose of post-closure compliance monitoring of the former USTs (See Figure 5-1). Residual impacts to groundwater quality have been characterized as VOCs and total petroleum hydrocarbons (TPH).

5.3 AQUIFER IDENTIFICATION

A generalized hydrogeologic model has been developed for the Hebron facility based on considerable subsurface soil, groundwater, and surface water investigations. A generalized groundwater model was presented in Section 4.2 of the "Addendum to the RCRA Facility Investigation Report, Hebron Recycling Center, Volume 1", dated June 1993 (pages 4-1 through 4-7).

Two separate saturated zones occur at this site. The shallow saturated zone occurs in sand and gravel lenses that are generally present within the upper 20-30 feet of the subsurface. Groundwater in this shallow water-bearing zone is considered unconfined. The deeper saturated zone occurs in sand lenses that are present at approximate depths of 40 to 70 feet. Groundwater in this zone is considered semi-confined to confined. The deeper zone is separated from the shallow zone by approximately 20 to 30 feet of clay and silt. The three well clusters installed at the site had screened intervals targeted in the upper 20 feet, and below 45 feet from grade at each of the clusters. Water levels in deep wells are as much as 10 feet lower than water levels in shallow wells, indicating that a potential downward vertical gradient exists between the two hydrogeologic units. However, the magnitude of the vertical gradient suggests that there is not significant hydraulic connection between the two water-bearing zones.

The shallow groundwater flow at the site is generally toward the north and northwest, toward the South Fork of the Licking River. A comparison of the depth to groundwater and river level elevations indicates that, at normal static conditions, the river is the discharge point for the shallow groundwater in the area. However, the stream appears to recharge the shallow groundwater when precipitation causes sudden rises in stream stage. The deeper groundwater flow is also toward the northwest; however, the discharge point for this zone is not known.

Groundwater recovery, pumping, and slug tests have been performed to characterize the hydrogeologic conditions of the shallow water-bearing zone at this site. Based upon these activities, estimated hydraulic conductivities may range between $1.6x10^{-3}$ and $4.9x10^{-6}$ cm/s with transmissivity values estimated at between 0.38 and 4.714 ft/day.

5.4 DELINEATION OF THE WASTE MANAGEMENT AREA

The waste management area has been defined as the former UST area, as shown on Figure 5-1. The groundwater wells installed to monitor the extent of impacts in this area are also presented on Figure 5-1.

5.5 DESCRIPTION OF PLUME OF CONTAMINATION

Clean Harbors is implementing corrective action activities at this site to address residual groundwater impacts associated with the former USTs and a 1985 above ground storage tank fire that occurred in the west yard area (Figure 5-1). Residual impacts to groundwater quality extend down-gradient of the former UST area and have been characterized by low concentrations of TPH and VOCs. Exposure information for the closed UST unit, as required by OAC Rule 3745-50-40(E), is presented in the November 1995 Risk-Based Cleanup Level Development Report. Data from groundwater monitoring events implemented at the site have been submitted to OEPA in previous progress reports. Figures 5-2 and 5-3 depict groundwater flow in the lower and upper water bearing zones, respectively. Analytical data from the December 2002 groundwater monitoring event is summarized on Figure 5-4. Geologic cross-sections for the site have been submitted previously as part of the RCRA Facility Investigation and Corrective Measures Study reports.

5.6 PROPOSED GROUNDWATER MONITORING PROGRAM

A site-wide groundwater monitoring well network has been installed at the Hebron facility. Monitoring wells H-1S, H-9S, H-10S, H-15S and H-15D comprise the post-closure monitoring well network for the former USTs. The shallow monitoring wells (H-1S, H9S, H-10S, and H-15S) are screened approximately 15 to 25 feet below ground surface. Monitoring well H-15D is screened approximately 60 to 70 feet below ground surface. Completion details for the groundwater monitoring wells were previously submitted as part of the January 1993 RFI Report.

Groundwater sampling and analysis of the post-closure monitoring well network will be completed on a semi-annual basis. Groundwater monitoring procedures for post-closure and site-wide corrective action will be consistent with those outlined in the Sampling and Analysis Plan presented in Appendix 5-1. Clean Harbors shall submit semiannual progress reports summarizing the results of the semiannual groundwater monitoring and evaluating the effectiveness of the corrective measure systems to remediate and mitigate the migration of groundwater quality impacts at the site. The effectiveness evaluation may include preparation of isoconcentration maps and/or trend charts to evaluate the possible extent of impacts and track remedial progress.

5.7 COMPLIANCE MONITORING

Closure related compliance for the UST area will be defined by either MCLs or method detection limits (MDLs) for those constituents without published MCLs. Alternatively, ACLs may be established in accordance with OAC 3745-54-94(B). Drinking water MCLs or MDLs for contaminants currently being detected in site groundwater can be found in Table 5-2. Monitoring well H-10S has been identified as the point of compliance for the former hazardous waste UST's.

Upon attainment of the aforementioned groundwater protection standards for at least three (3) years in all wells (H-1S, H-9S, H-10S, H-15S and H-15D) for all Table 5.2 constituents, corrective action activities may cease and the site will enter into compliance monitoring in accordance with OAC 3745-54-99. Well H-1S serves as the up-gradient/background monitoring well and wells H-9S, H-10S, H-15S and H-15D serve as down-gradient monitoring wells for the purpose of post-closure compliance monitoring of the former USTs. Groundwater samples will be collected from the identified wells and analyzed for the constituents listed in Table 5-2 and Section 4 of Appendix 5-1 on a semiannual basis. In accordance with OAC 3745-54-94, groundwater protection standards for compliance monitoring will be MCLs for those chemicals being monitored for which MCLs exist, and MDLs for the remainder of the constituents. Clean Harbors may also establish Alternate Concentration Limits (ACLs) in accordance with the provisions of OAC 3745-54-94. Table 5-2 summarizes the constituents of concern and current concentration limits for this site. For the purposes of compliance monitoring, the point of compliance will continue to be monitoring Well H-10S. Compliance monitoring will be conducted for the compliance period defined for the unit under OAC 3745-54-96(A) (13 years) or until clean closure of the unit is demonstrated (once the Site meets Ohio's risk goals) and the post-closure plan for the site is amended and approved. Groundwater monitoring in accordance with OAC 3745-54-99 or 3745-54-98 will continue for the duration of the post-closure care period (up to 30 years from the completion of closure for the unit per OAC 3745-66-17(A)(1)) as long as the concentration limits are not being exceeded at the point of compliance and site-specific risk-based cleanup goals have not been met. Clean Harbors may petition Ohio EPA for clean closure of the UST area when detected groundwater and soil sample concentrations meet the target cleanup goals approved by Ohio EPA.

Annual reports will be submitted to Ohio EPA. There report shall include a determination of the groundwater flow rate and direction in the uppermost aquifer in accordance with OAC 3745-54-99(E). The groundwater flow direction(s) shall be determined through constructing potentiometric surface map(s) using the measured static water elevations at groundwater monitoring wells H-1S, H-9S, H-10S, H-15S and H-15D. Based upon the groundwater flow direction(s) and gradient(s), the groundwater flow rate shall be calculated utilizing accepted groundwater hydrology equations/principles (i.e., Darcy's Law). Clean Harbors may also construct a more detailed groundwater flow model to evaluate groundwater flow directions/rates across the former unit. Also, included in each report will be the results of a statistical evaluation that will be conducted to determine whether there is a statistically significant evidence of contamination for any of the constituents of concern at the point of compliance. The statistical evaluation will be conducted in accordance with the methodologies included in OAC 3745-54-

97. Appropriate spatial analysis will be determined after testing distributional assumptions. Distributional assumptions will be tested using probability plots and/or the Shapiro-Wilk test for normality. Then, the percent of non-detects for each constituent will be determined. Based on the findings of the above examinations, either parametric ANOVA or non-parametric ANOVA will be used. If a statistically significant difference is found between the wells, then appropriate contrasts will be performed. Prediction Intervals will be calculated if the distributional assumptions are met. If the assumptions are not met, non-parametric prediction intervals will be constructed. The format of the reporting will comply with Ohio EPA's annual report required for final status facilities.

If constituents are detected which are not included in Table 5-2, Clean Harbors may resample within 30 days to confirm if the constituents are present at a statistically significant concentration. If the second analysis confirms the presence of new constituents, or if Clean Harbors chooses not to re-sample, the concentration of the new constituents shall be reported within seven days after completion of the second analysis (or initial analysis if not-re-sampled), and added to Table 5.2. If the ground water protection standards are being exceeded, at any monitoring well at the point of compliance, Clean Harbors will, within 90 days, submit a report that demonstrates that a source other than the regulated unit caused the standard to be exceeded or that apparent non-compliance with the standard was due to an error in sampling, analysis, or evaluation; or submit a report documenting any necessary changes to the compliance monitoring program at the facility. If new constituents associated with the regulated unit are detected, Clean Harbors shall also evaluate the capability of the corrective action systems to address the new constituents.

Table 5-2

Hazardous Constituent	Concentration Limit (ug/l)	Hazardous Constituent	Concentration Limit (ug/l)
Chloromethane	10	Bromomethane	5
Vinyl Chloride	2*	Chloroethane	10
Methylene Chloride	5	Acetone	20
Carbon Disulfide	20	1,1-Dichloroethene	7*
cis-1,2-Dichloroethene	70	trans-1,2-Dichloroethene	100
1,1-Dichloroethane	5	1,2-Dichloroethane	5*
Chloroform	5	1,1,1-Trichloroethane	200*
Methyl Ethyl Ketone	20	Bromodichloromethane	5
Carbon Tetrachloride	5*	cis-1,3-Dichloropropene	5
1,2-Dichloropropane	5*	Dibromochloromethane	5
Trichloroethene	5*	Benzene	5*
1,1,2-Trichloroethane	5*	Bromoform	5
trans-1,3-Dichloropropene	5	2-Hexanone	20
4-Methyl-2-pentanone	20	1,1,2,2-Tetrachloroethane	5
Tetrachloroethene	5*	Chlorobenzene	5
Toluene	1000*	Styrene	100*
Ethylbenzene	700*	TPH	100
Xylenes (Total)	10,000*		

* Designates concentration limits equal to Ohio drinking water maximum contaminant levels (OAC Rule 3745-81-12); all others based on historical background well (H-1S) method detection limits (MDLs)

Appendix 5-1

AMENDED POST CLOSURE AND SITE-WIDE CORRECTIVE ACTION GROUNDWATER SAMPLING AND ANALYSIS PLAN

AMENDED POST CLOSURE AND SITE-WIDE CORRECTIVE ACTION GROUNDWATER SAMPLING AND ANALYSIS PLAN

1.0 INTRODUCTION

This Sampling and Analysis Plan (SAP) is written to provide guidance for field and laboratory work implemented to collect groundwater monitoring data for the post-closure and site-wide corrective action programs at the Clean Harbors Hebron Recycle Center. This SAP is intended to address the requirements of OAC 3745-54-97, as amended March 13, 2002.

This SAP provides guidance for sampling activities conducted during the post-closure and site-wide corrective action periods. The SAP describes the sampling locations, frequency of sampling, sampling designation, sampling equipment, procedures, sample handling, analytical methodology, and documentation procedures.

This SAP has been prepared as an update to the Quality Assurance Project Plan (QAPjP) previously submitted to the Ohio Environmental Protection Agency (OEPA) and United States Environmental Protection Agency (U.S. EPA) as part of the RCRA Facility Investigation and Corrective Measures Study (RFI/CMS) Work Plan for the Hebron Recycle Center (dated September 1995). Work specified in the RFI/CMS Work Plan has been completed and the site is currently under going U.S. EPA and OEPA approved site-wide corrective action and post-closure care. This updated SAP describes groundwater monitoring procedures to be implemented during the site-wide corrective action and post-closure care periods for the site.

2.0 GROUNDWATER SAMPLE COLLECTION

2.1 SAMPLING OBJECTIVE

Groundwater monitoring is being implemented at the Hebron site in order to address post-closure and corrective action permit requirements. The primary objective of the post-closure monitoring well network is to confirm residual groundwater quality downgradient of the former underground storage tank area. The corrective action monitoring well network has been established to confirm residual quality along the down-gradient property boundary, and track remedial progress at the site.

2.2 SAMPLING LOCATIONS

The post-closure groundwater monitoring well network consists of wells H-1S, H-1DD, H-9S, H-10S, H-15S and H-15D. Monitoring wells H-1S and H-1DD serve as background monitoring locations as required by OAC 3745-54-97(A)(1). Monitoring wells H-9S, H-10S, H-15S, and H-15D serve as downgradient monitoring locations for the post-closure of the

former tank system area that is being managed as a closed landfill, with the exception of the installation and maintenance of a final cover. Monitoring wells H-4S, H-7S, H-11S, H-12S, H-12D, H-19S, and H-20S serve as downgradient monitoring locations for on-going site-wide corrective action. These two sets of downgradient monitoring well locations are intended to satisfy the requirements of OAC 3745-54-97(A)(2 and 3).

2.3 SAMPLING FREQUENCY

Groundwater samples shall be collected on a semi-annual basis throughout the post-closure and site-wide corrective action periods. Clean Harbors may coordinate with OEPA during the post-closure period and implementation of corrective action activities to modify the well network and/or sampling frequency, if necessary.

2.4 SAMPLE COLLECTION PROCEDURES

2.4.1 Water and Well Depth Level Measurements

Prior to purging or sampling the wells, the depth to groundwater will be gauged using an electronic product interface meter. The interface meter shall also be utilized to measure the depth and thickness of light and/or dense non-aqueous phase liquid (NAPL) within the wells (if present). The meter's probe will be lowered into the well until the meter indicates groundwater or light NAPL (LNAPL) has been reached. If LNAPL is indicated, the probe shall be slowly raised and lowered to confirm the depth to the upper LNAPL surface. The probe shall then be slowly lowered to the top of the groundwater surface and slowly raised and lowered to confirm the depth to groundwater.. The meter's probe will then be lowered into the well until the meter indicates dense NAPL (DNAPL) or the bottom of the well has been reached. The probe will be slowly raised and lowered to confirm the depth to DNAPL (if present) and the bottom of the well.

The north side of the well casing shall serve as the elevation reference point for fluid level and total depth readings. The measured fluid level and total well depths will be recorded to the nearest 0.01 foot in the field notebook and on the example groundwater sampling field log provided in Attachment 1. Portions of the fluid level meter probe and tape that may have potentially come in contact with groundwater and/or the well casing will be decontaminated with a detergent wash and distilled/deionized water rinse.

2.4.2 Well Preparation for Sampling

Groundwater monitoring wells to be sampled will be purged with a disposable bailer or mini-submersible pump. The bailer, if used, will be attached to a polypropylene rope and the well shall be bailed until three well casing volumes are removed. The well casing volumes will be calculated utilizing the water and well depth data obtained during the

performance of fluid level measurements as outlined in Section 2.4.1. Well casing volumes shall be calculated using the following formula:

$$V = H * r^2 * \pi * x \quad \text{where;}$$

V=well casing volume, gallons

H = height of water in the well column, feet

r = radius of the monitoring well, square feet

$\pi = 3.14$

x=conversion factor, 7.48 gallons per cubic foot

A mini-submersible pump or other mechanical pump may be used to purge the monitoring wells prior to sampling Appropriate hose or tubing will be attached to the pump and the pump shall be lowered to the bottom of the well. The discharge line will be directed into a calibrated 5-gallon or other appropriate container. The pump will be turned on and the flow rate measured with a stopwatch and the calibrated container. Observations of the flow rate, rate of recovery, and other pertinent observations will be recorded in the field log book and on the ground water sampling field log provided in Attachment 1. When well preparation is complete, the hose or tubing will either be decontaminated with a detergent wipe followed by a distilled/deionized water rinse or placed in a plastic bag for proper disposal. Tubing may also be dedicated to individual wells in order to limit the potential for cross-contamination.

2.4.3 Field Measurements

Field parameters such as temperature, specific conductance, and pH will be measured in the field during the purging of each well. Field parameters will generally be measured using a portable pH, temperature, and conductivity meter. The meter(s) will be calibrated each day prior to sampling events in accordance with the manufacturer's specifications.

Groundwater for the field measurements will be removed from the well and placed in an appropriate container housing the portable field meter probes. Field parameters shall be measured, at a minimum, upon removing each well casing volume from the well. Field measurements shall be recorded on the example sample log included as Attachment 1 and/or in the field log. Purging shall continue until field parameter readings have stabilized and a minimum of three well-casing volumes have been removed from the well. Alternatively, micropurge sampling may be implemented at this site in general accordance with Chapter 10 of the *Technical Guidance Manual for Hydrogeologic Investigations and Groundwater Monitoring* (OEPA, May 2012).

2.4.4 Sampling Time After Purging

The rate of recovery may influence the timing of sample acquisition, especially with wells that are slow to recover following purging. Higher yield wells that produce water at a rate sufficient to allow for purging of the minimum three well volumes will be sampled immediately following purging and field parameter measurement. Samples will be collected from wells that are purged to dryness as soon as sufficient water is available. All samples will be collected within 24 hours of purging.

2.4.5 Sample Collection Equipment and Protocol

A disposable bailer equipped with a bottom check ball shall be used to collect groundwater samples from the Hebron site. A polypropylene rope will be attached and used to lower the disposable bailer into the well. Care shall be taken to not create unnecessary agitation during retrieval of the groundwater samples from the well. Groundwater retrieved from the monitoring well shall be transferred directly to appropriate sample containers with the proper preservatives provided by the analytical laboratory. The sample containers shall be slowly filled to minimize agitation of the groundwater samples.

2.5 EQUIPMENT DECONTAMINATION

Non-disposable and non-dedicated sampling equipment (excluding the pH, conductivity, temperature meter) will be decontaminated prior to use at each well. The general protocol for equipment decontamination shall consist of the following:

1. An initial Alconox or equivalent detergent/water wash;
2. Clean water rinse;
3. Methanol rinse; (optional, may be omitted)
4. Distilled/deionized water rinse; and
5. Air dry

2.6 WASTE MANAGEMENT

Purge and decontamination waters generated during collection of groundwater samples will be managed in the on-site groundwater treatment system. Inert disposable items such as bailers, polypropylene rope, latex gloves, used pump tubing, etc. shall be placed in plastic garbage bags and disposed in accordance with applicable regulations.

3.0 SAMPLE PRESERVATION AND SHIPMENT

Analytical parameters for the groundwater monitoring program at the Hebron Recycle Center include volatile organic compounds and total petroleum hydrocarbons as mineral spirits. The following sample containers and preservatives will typically be used:

Parameter	Container	Preservative	Amount of Sample
Volatile Organic Compounds	Glass with Teflon lined septum	HCL Cool to 4°C	3 x 40 ml
TPH as Mineral Spirits	Glass jar and/or glass with Teflon lined septum	HCL Cool to 4°C	1 liter and/or 3 x 40 ml

Upon collection, the samples will be transferred to an opaque cooler, placed on ice, and prepared for transportation to the analytical laboratory, following standard chain-of-custody/sample analysis request (COC/SAR) protocols. The samples shall either be hand-delivered or shipped via overnight courier to the analytical laboratory.

4.0 ANALYTICAL PROCEDURES

Clean Harbors is monitoring residual concentrations of volatile organic compounds and total petroleum hydrocarbons as mineral spirits in groundwater samples collected from the Hebron site. The following table describes the analytical methods, reporting limits, and holding times for these constituents:

Parameter	Analytical Method	Reporting Limit	Maximum Holding Time
Volatile Organic Compounds	SW-846 Method 8260B	2 – 1000ug/l	14 days
TPH as Mineral Spirits	SW-846 Method 8015 Modified	100 ug/l	14 days

The following table lists the reporting limits for each specific volatile organic compound analyzed as part of the groundwater monitoring program:

Parameter	Reporting Limit, µg/L
Acetone	20
Acetonitrile	100
Acrylonitrile	100
Allyl Chloride	5
Benzene	5

Parameter	Reporting Limit, µg/L
Benzyl Chloride	25
Bromobenzene	5
Bromochloromethane	10
Bromodichloromethane	5
Bromoform	5
Bromomethane	5
n-Butylbenzene	5
sec-Butylbenzene	5
tert-Butylbenzene	5
Carbon Disulfide	20
Carbon Tetrachloride	5
Chlorobenzene	5
Chloroethane	5
2-Chloroethyl vinyl ether	10
Chloroform	5
Chloromethane	10
2-Chlorotoluene	5
4-Chlorotoluene	5
Dibromochloromethane	5
1,2-Dibromo-3-chloropropane	5
1,2-Dibromoethane	5
Dibromomethane	5
1,2-Dichlorobenzene	5
1,3-Dichlorobenzene	5
1,4-Dichlorobenzene	5
1,4-Dichloro-2-Butene	25
Dichlorodifluoromethane	5
1,1-Dichloroethane	5
1,2-Dichloroethane	5
1,1-Dichloroethene	5
cis-1,2-Dichloroethene	5
trans-1,2-Dichloroethene	5
1,2-Dichloropropane	5
1,3-Dichloropropane	5
2,2-Dichloropropane	5
cis-1,3-Dichloropropene	5
trans-1,3-Dichloropropene	5
Ethylbenzene	5
Ethyl Methacrylate	5
2-Hexanone	20
Hexachlorobutadiene	5
Iodomethane	5
iso-Butanol	1000
Isopropylbenzene	5
4-Isopropyltoluene	5
Methacrylonitrile	25
Methyl Ethyl Ketone	20
Methyl Methacrylate	5

Parameter	Reporting Limit, µg/L
4-Methyl-2-pentanone	20
Methyl-tert-butyl ether	5
Methylene Chloride	5
Naphthalene	5
n-Propylbenzene	5
Styrene	5
1,1,1,2-Tetrachloroethane	5
1,1,2,2-Tetrachloroethane	5
Tetrachloroethene	1.4
Toluene	5
1,2,3-Trichlorobenzene	5
1,2,4-Trichlorobenzene	5
1,1,1-Trichloroethane	5
1,1,2-Trichloroethane	5
Trichloroethene	2.6
Trichlorofluoromethane	5
1,2,3-Trichloropropane	5
1,2,4-Trimethylbenzene	5
1,3,5-Trimethylbenzene	5
Vinyl Acetate	25
Vinyl Chloride	2
m & p-Xylenes	5
o-Xylene	5

5.0 QUALITY ASSURANCE/QUALITY CONTROL (QA/QC)

The following sections of the SAP describe the QA/QC samples that will be analyzed concurrent with the ground water samples during the post closure and site-wide corrective actions care period consistent with the requirements of OAC rule 3745-54-92.

5.1 FIELD/EQUIPMENT/LAB BLANKS

Decontaminated and/or disposable bailers may be used for sample collection. As indicated previously, Clean Harbors may also collect groundwater samples from this site using micropurge methods. If disposable bailers are used for sample collection, field and equipment blanks will not be required. If decontaminated bailers or sample pumps are used, then field and equipment blanks will be collected in accordance with Sections 5.1.1 and 5.1.2 respectively.

5.1.1 Field Blanks

If necessary, a field blank shall be prepared during each sampling event. Sample bottles identical to those used for groundwater samples will be filled with rinse water (distilled water) used for equipment decontamination directly from the rinse water source (i.e.

gallon jug). Field blanks will be analyzed for the VOCs indicated in Section 4.0. Field blank analytical results will be used to evaluate the possibility of contamination from ambient sampling conditions.. One field blank will accompany each set of samples submitted to the laboratory for analysis (if applicable).

5.1.2 Equipment Blanks

Equipment blanks shall be prepared by pouring rinse water (distilled water) through the sample collection equipment (i.e., bailers), and collecting the rinseate. The rinseate samples will be analyzed for the same parameters as the associated groundwater samples. Equipment blanks will be used to determine the effectiveness of the decontamination procedures, and to identify if samples were contaminated by sampling equipment. One equipment blank will accompany each set of samples submitted to the laboratory for analysis.

5.1.3 Lab Blanks

The nature and extent of lab blank usage as part of the overall laboratory QA/QC program shall be in accordance with U.S. EPA SW-846 "Standard Methods for Analysis of Test Methods for Evaluating Solid Waste, Physical/Chemical Methods" 3rd Edition, Update IV, Section 8000 Gas Chromotography.

5.2 DUPLICATE SAMPLES

Duplicate samples will be collected at the same time and location as field samples at a minimum frequency of one per ten samples. The duplicate samples will be used to assess laboratory precision. Duplicates will be collected in immediate succession using identical sampling, sample storage, transportation, and analytical techniques. Duplicates will be evenly split from the same bailer load and equally proportioned into each duplicate sample container, to the extent practicable. Sample containers will be labeled such that laboratory personnel should not be aware which duplicate samples they are analyzing.

5.3 CHAIN-OF-CUSTODY PROCEDURES

A chain-of-custody form will be completed after sample collection. The chain-of-custody forms will accompany the samples to the laboratory. The field personnel collecting the samples will be responsible for the custody of the samples until transportation to the laboratory. Sample transfer will require the individuals relinquishing and receiving the samples to sign, date, and note the time on the chain-of-custody forms. A copy of a typical chain-of-custody form is included as Attachment 2.

5.4 SAMPLE LABELS

Sample labels will be placed on all samples and will contain the following information:

- Date and time of collection;
- Sample location;
- Sample number/identification;
- Analysis to be performed; and
- Sampler's initials.

5.5 FIELD LOG BOOKS

Field log books used during sampling activities will include the following information:

- Sampling location;
- Static water level (depth to water);
- Depth to the bottom of the well;
- Calculated well volume;
- Actual evacuation volume;
- Date and time;
- Field parameter measurements;
- Analyses to be performed;
- Preservation method;
- Field meter calibration information; and
- General remarks (weather conditions, etc.)

Entries will be written legibly in black indelible ink. Entry errors will be crossed out with a single line, dated, and initialed by the person making the correction.

ATTACHMENT 1

GROUND WATER SAMPLING FIELD LOG

Project # _____

EXAMPLE FIELD RECORD
GROUNDWATER SAMPLING

1. Well/Station: _____

2. Date/Time of Fluid Level Measurement: _____

3. Total Depth_____ft-bmp

   Depth to Hydrocarbon_____ft-bmp

   Depth to Water_____ft-bmp

   Water Column_____feet

   Well Diameter_____inches

   Gallons/Foot_____gallons

   Gallons/Casing Volume_____gallons

   Total Purge Volume_____gallons

4. Date and Time of Sample Collection:_____

Volume Removed	Time	pH	Sp. Cond.	Temp °C	Notes

5. Remarks:

_____

_____

_____

_____

_____

6. Field Personnel:_____

ATTACHMENT 2

CHAIN-OF-CUSTODY FORM

EXAMPLE ENVIRONMENTAL CHAIN OF CUSTODY

DATE:

			PROJECT #
			AUTHORIZATION #
GENERATOR SITE & ADDRESS	PROJECT MANAGER(S)	PHONE & FAX	

SAMPLER'S NAME

ANALYSIS REQUESTED

FIELD SAMPLE ID #	SAMPLE MATRIX	DATE/TIME SAMPLED	# OF CONTAINERS	PRESERVATION METHOD	TPH (8015) Mineral Spirits	Screen	TOTAL Cyanide 3352	Sulfide	TOTAL Volatiles (8240)	(601)	(624)	SEMI-VOA (8270)	(602)	(625)	TCLP Metals	VOA	BNA	IGNITABILITY (D001)	CORROSIVITY (D002)	REACTIVITY (D003)	SPECIFIC GRAVITY	C.O.D. (410.4)	B.O.D. (405-1)	TOTAL Metals	PHENOLS (420.1)	PCB's (8080)	BTEX (8240)	PAH (8210)	TOTAL SUSPENDED SOLID (160.2)	OIL & GREASE (413.2)	(9909)					

COMMENTS/REMARKS:

REQUESTED TAT

SAMPLE TRANSFER RECORD

RELINQUISHED BY	DATE	TIME	RECEIVED BY	DATE	TIME
SIGNATURE OF COLLECTOR:					

LAB USE ONLY

TEMPERATURE WHEN RECEIVED _____ °C SHIPPED VIA: _____ UPS _____ FED EX _____ OTHER

SAMPLE KIT OPENED AND CHECKED IN BY _____ AT _____ ON _____

C.O.C. SEALS SIGNED, DATED, AND INTACT ON ALL SAMPLE JARS? YES _____ NO _____ IF NO, EXPLAIN _____

SHIPPING NOTES/LAB COMMENTS:

Date: December 19, 2014
Revision No.: 0

Appendix 5-2

Groundwater Monitoring Well Logs (H-1S, H-9S, H-10S, H-15S, H-15D)

PIEZOMETER DETAIL INFORMATION SHEET

GROUND SURFACE ELEVATION 884.7'

TOP OF WELL CASING ELEVATION 887.80'

JOB NUMBER 3110-056

BORING NUMBER H2S → New H-15

DATE 19-JUN-86

LOCATION Hebron, OH

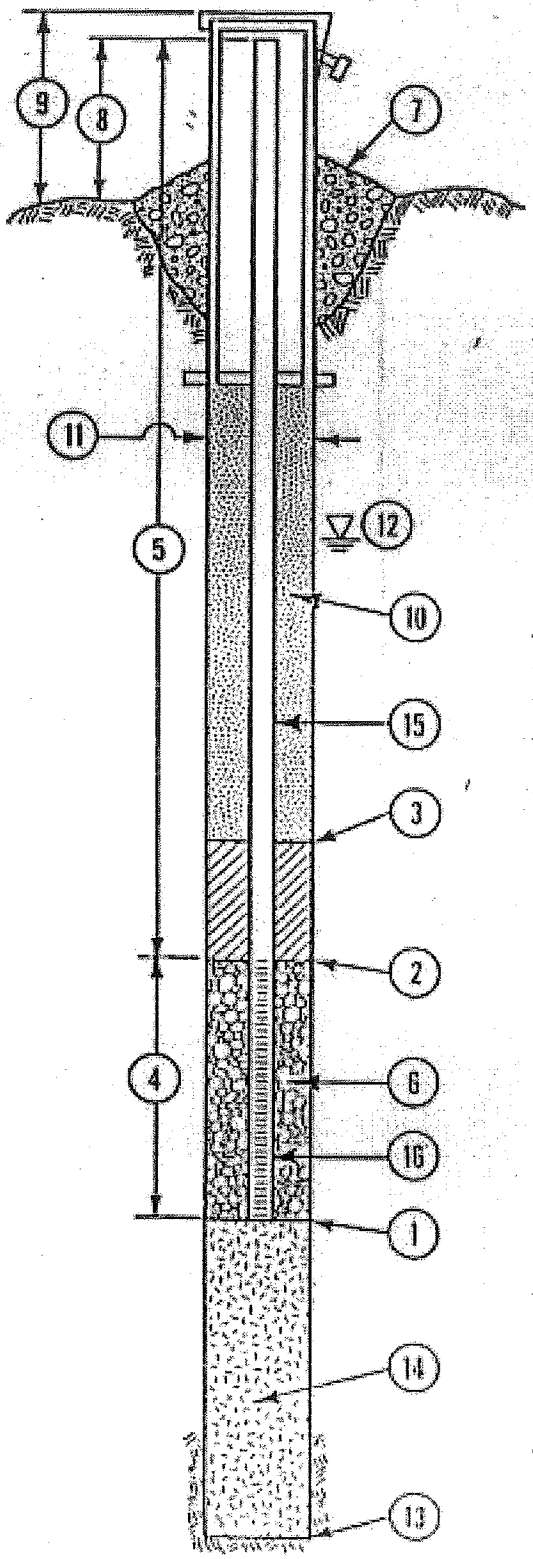

1. DEPTH TO BOTTOM OF WELL POINT OR SLOTTED PIPE 25 FEET.*
2. DEPTH TO BOTTOM OF SEAL (IF INSTALLED) 18 FEET.*
3. DEPTH TO TOP OF SEAL (IF INSTALLED) 17 FEET.*
4. LENGTH OF WELL SCREEN 5 FEET. SLOT SIZE .010.
5. TOTAL LENGTH OF PIPE 22 FEET AT 2 INCH DIAMETER.
6. TYPE OF PACK AROUND WELL POINT OR SLOTTED PIPE quartz sand.
7. CONCRETE CAP. YES NO (CIRCLE ONE)
8. HEIGHT OF WELL CASING ABOVE GROUND 2 FEET.
9. PROTECTIVE CASING? YES NO (CIRCLE ONE) HEIGHT ABOVE GROUND 2 FEET. LOCKING CAP? YES NO (CIRCLE ONE)
10. TYPE OF UPPER BACKFILL cement grout.
11. BOREHOLE DIAMETER 8 INCHES.
12. DEPTH TO GROUND WATER 25.25 FEET.*
13. TOTAL DEPTH OF BOREHOLE 25 FEET.*
14. TYPE OF LOWER BACKFILL none.
15. PIPE MATERIAL stainless steel.
16. SCREEN MATERIAL stainless steel.

*(DEPTH FROM GROUND SURFACE)

PIEZOMETER INSTALLATION DETAILS

Wang Engineering

BLASLAND, BOUCK & LEE

SURFACE ELEVATION: 877.64'	DATE STARTED: 1/14/92	H-9S	
CLASSIFIED BY: RRM	DATE COMPLETED: 1/14/92		
	PROJECT: Safety - Kleen	PROJECT NO.: 213.04	
	LOCATION: Hebron, Ohio	PAGE: 1 of 2	

SUBSURFACE LOG

DEPTH (FT)	SAMPLES	SAMPLE NO.	SOIL DATA: RECOVERY (FT)	SOIL DATA: N	SOIL DATA: PID HEADSPACE (ppm)	WELL COLUMN	GEOLOGIC COLUMN	SOIL CLASSIFICATION
5								
0		1	0.8	13	1.4			Silty CLAY; orange-brown; moist.
		2	1.2	13	1.6			
		3	0.2	8	3.4			
5		4	1.4	21	1.4			Silty CLAY; orange-brown and gray-brown mottled; moist.
		5	1.8	37	4.6			
10		6	1.0	24	540			Silty CLAY; gray; trace fine gravel; dry to moist; solvent odor at 10 foot to 12 foot interval.
		7	0.5	23	27.6			
		8	1.5	18	2.1			
15		9	1.9	41	3.4			
		10	1.0	39	3.7			Medium to coarse SAND and fine GRAVEL, gray, wet.
20		11	2.0	19	3.7			
		12	1.2	28	4.6			Silty CLAY; brown; trace fine gravel; moist.
25		13	1.2	27	1.3			

BLASLAND, BOUCK & LEE	DATE STARTED: 1/14/92	H-9S
	DATE COMPLETED 1/14/92	
SURFACE ELEVATION: 877.64'	PROJECT: Safety - Kleen	PROJECT NO.: 213.04
CLASSIFIED BY: RRM	LOCATION: Hebron, Ohio	PAGE: 2 of 2

DEPTH (FT)	SAMPLES	SAMPLE NO.	SOIL DATA: RECOVERY (FT)	SOIL DATA: N	SOIL DATA: PID HEADSPACE (ppm)	WELL COLUMN	GEOLOGIC COLUMN	SUBSURFACE LOG — SOIL CLASSIFICATION	DEPTH (FT)
0								Silty CLAY; brown; trace fine gravel; moist.	0
								Sampled to 26.0 Feet. Augered to 25.0 Feet.	
10									10
20									20
30									30
40									40
50									50
60									60

WELL CONSTRUCTION DETAILS

2-inch diameter Stainless Steel 0.010 inch slot screen 24.5' - 14.5'
2-inch diameter Stainless Steel riser 14.5' - 2.0' above ground
4-inch diameter Steel outer protective casing
Coarse Sand pack 25.0' - 12.5'
Bentonite seal 12.5' - 10.5'
Cement grout 10.5' - 0.0'

NOTES:

Measuring Point Elevation = 880.13
(Top of stainless steel riser)

BLASLAND, BOUCK & LEE

SURFACE ELEVATION: 878.80'	DATE STARTED: 1/21/92	H-10S
ASSIGNED BY: RRM	DATE COMPLETED: 1/21/92	PROJECT NO.: 213.04
	PROJECT: Safety - Kleen	PAGE: 1 of 2
	LOCATION: Hebron, Ohio	

SUBSURFACE LOG

DEPTH (FT)	SAMPLER	SAMPLE NO.	SOIL DATA: RECOVERY (FT)	SOIL DATA: N	SOIL DATA: PID HEADSPACE (PPM)	WELL COLUMN	GEOLOGIC COLUMN	SOIL CLASSIFICATION
5								
0		1	1.1/1.5	60	10.8			ASPHALT Brown to gray GRAVEL and silty CLAY FILL, dry.
		2	1.3	19	178			Silty CLAY; orange-brown; dry.
								SILT; brown to orange brown; dry.
5		3	1.2	21	360			Clayey SILT; brown to orange brown; dry; solvent odor.
		4	1.5	25	300			Silty CLAY; brown to orange-brown; trace fine gravel; moist to dry; solvent odor at 8.0 feet to 9.0 feet interval.
		5	0.8	26	310			
10		6	0.6	22	140			Silty CLAY; gray to brownish; stiff; trace fine gravel; moist to dry; solvent odor at 9.0 feet to 10.0 feet interval.
		7	0.5	18	2.2			
		8	0.6	20	60.0			
15		9	1.4	35	0.2			
		10	1.4	39	0.0			Coarse SAND and fine to medium GRAVEL, brown to gray, wet below approximately 19.0 feet.
20		11	1.7	18	0.0			
								Clayey SILT; gray; damp.
		12	1.3	36	0.2			SILT; brownish-gray; little sand; very fine; trace gravel; fine; wet.
		13	1.8	26	0.2			
25								

BLASLAND, BOUCK & LEE	DATE STARTED: 1/21/92	H-10S
	DATE COMPLETED 1/21/92	
SURFACE ELEVATION: 679.80'	PROJECT: Safety - Kleen	PROJECT NO.: 213.04
CLASSIFIED BY: RBM	LOCATION: Hebron, Ohio	PAGE: 2 of 2

SUBSURFACE LOG

DEPTH (FT)	SAMPLES	SAMPLE NO.	SOIL DATA: RECOVERY (FT)	SOIL DATA: N	SOIL DATA: PID HEADSPACE (ppm)	WELL COLUMN	GEOLOGIC COLUMN	SOIL CLASSIFICATION
20								SILT; brownish-gray; little sand; very fine; trace gravel; fine; wet.
		14	1.0	Shelby				
30								Sampled to 27.0 feet. Augered to 26.0 feet.
35								
40								
45								
50								
55								

WELL CONSTRUCTION DETAILS

2-inch diameter Stainless Steel 0.010 inch slot screen 25.0' - 15.0'
2-inch diameter Stainless Steel riser 15.0' - - 2.0' above ground
4-inch diameter Steel outer protective casing
Coarse Sand pack 26.0' - 13.0'
Bentonite seal 13.0' - 10.5'
Cement grout 10.5' - 0.0'

NOTES:

Measuring Point Elevation - 681.23
(Top of stainless steel riser)

BLASLAND, BOUCK & LEE	DATE STARTED: 1/13/92	H-15S
SURFACE ELEVATION: 857.82'	DATE COMPLETED: 1/13/92	PROJECT NO.: 213.04
CLASSIFIED BY: RSM	PROJECT: Safety - Kleen	PAGE: 1 of 2
	LOCATION: Hebron, Ohio	

SUBSURFACE LOG

DEPTH (FT)	SAMPLES	SAMPLE NO.	SOIL DATA: RECOVERY (FT)	SOIL DATA: N	SOIL DATA: PID HEADSPACE (ppm)	WELL COLUMN	GEOLOGIC COLUMN	SOIL CLASSIFICATION	DEPTH (FT)
5									5
0								See H-15D Subsurface Log for Geologic Description.	0
5									5
10									10
15									15
20									20
25									25

Augered to 25.0 feet.
Shelby Tube Sample Taken at 23.0' - 27.5'

WELL CONSTRUCTION DETAILS

2-inch diameter Stainless Steel 0.010 inch slot screen 23.7' - 13.7'
2-inch diameter Stainless Steel riser 13.7' - - 2.0' above ground
4-inch diameter Steel outer protective casing
Coarse Sand pack 25.0' - 11.5'
Bentonite seal 11.5' - 9.0'
Cement grout 9.0' - 0.0'

NOTES:

Measuring Point Elevation - 879.80
(Top of stainless steel riser)

BLASLAND, BOUCK & LEE	DATE STARTED: 1/13/92	H-15S
SURFACE ELEVATION: 897.82'	DATE COMPLETED 1/13/92	PROJECT NO.: 213.04
LOGGED BY: AAN	PROJECT: Safety - Kleen	PAGE: 2 of 2
	LOCATION: Hebron, Ohio	

DEPTH (FT)	SAMPLES	SAMPLE NO.	SOIL DATA: RECOVERY (FT)	SOIL DATA: N	SOIL DATA: PID HEADSPACE (ppm)	WELL COLUMN	GEOLOGIC COLUMN	SUBSURFACE LOG: SOIL CLASSIFICATION	DEPTH (FT)
20		1	1.1	Shelby					20
30									30
35									35
40									40
45									45
50									50
55									55

BLASLAND, BOUCK & LEE

SURFACE ELEVATION: 877.82'	DATE STARTED: 1/8/92	H-15D	
	DATE COMPLETED: 1/16/92		
	PROJECT: Safety - Kleen	PROJECT NO.: 213.04	
CLASSIFIED BY: RRM	LOCATION: Hebron, Ohio	PAGE: 1 of 3	

SUBSURFACE LOG

DEPTH (FT)	SAMPLES	SAMPLE NO.	SOIL DATA: RECOVERY (FT)	SOIL DATA: N	SOIL DATA: PID HEADSPACE (ppm)	WELL COLUMN	GEOLOGIC COLUMN	SOIL CLASSIFICATION
5								
0		1	2.0	14	0.0			Gray and brown mottled clayey SILT.
		2	1.6	16	0.0			Brown clayey SAND.
5		3	2.0	16	0.0			Brown to gray mottled silty and sandy CLAY
		4	2.0	16	12.2			
		5	0.4	8	13.3			
10		6	0.5		10.1			
		7	2.0		19.9			Gray silty CLAY, trace fine gravel, moist.
		8	2.0	49	17.0			Brown sandy/gravelly CLAY, dry.
15		9	2.0	30	15.9			Brown to gray, medium to coarse SAND and fine GRAVEL, wet below 18.0 feet.
		10	2.0	25	14.9			
20		11	2.0	9	48.0			
		12	1.0	9	25.1			
		13	2.0	54	11.2			Gray sandy/silty CLAY, little fine to medium gravel.
25								

BLASLAND, BOUCK & LEE	DATE STARTED: 1/8/92	H-15D
SURFACE ELEVATION: 877.82'	DATE COMPLETED 1/15/92	PROJECT: Safety - Kleen
ASSIFIED BY: RGM	LOCATION: Nebraska, Ohio	PROJECT NO.: 213.04
		PAGE: 2 of 3

DEPTH (FT)	SAMPLES	SAMPLE NO.	SOIL DATA: RECOVERY (FT)	SOIL DATA: N	SOIL DATA: PID HEADSPACE (ppm)	WELL COLUMN	GEOLOGIC COLUMN	SUBSURFACE LOG — SOIL CLASSIFICATION
25								Gray sandy/silty CLAY, little fine to medium gravel.
		14	1.6	31	8.7			
		15	1.0	15	4.1			
30		16	1.0	18	0.5			Gray to grayish-brown stiff silty CLAY, trace fine gravel.
		17	2.0	19	0.0			
		18	2.0	25	0.0			
35		19	1.0	28	0.0			
		20		14	0.0			
40		21	0.7	15	0.0			
		22	2.0	31	0.0			
		23	2.0	39	0.0			
45		24	2.0	30	0.0			
		25	2.0	66	0.0			
50		26	2.0	32	0.6			
								Gray medium SAND, wet.
		27	1.0	35	40.0			Gray stiff silty CLAY.
55		28		35	0.0			

BLASLAND, BOUCK & LEE	DATE STARTED: 1/8/92	H-15D
	DATE COMPLETED: 1/16/92	
SURFACE ELEVATION: 877.82'	PROJECT: Safety - Kleen	PROJECT NO.: 213.04
ASSOCIATED BY: RAM	LOCATION: Hebron, Ohio	PAGE: 3 of 3

SUBSURFACE LOG

DEPTH (FT)	SAMPLES	SAMPLE NO.	SOIL DATA: RECOVERY (FT)	SOIL DATA: N	SOIL DATA: PID HEADSPACE (ppm)	WELL COLUMN	GEOLOGIC COLUMN	SOIL CLASSIFICATION
50								Gray stiff silty CLAY.
		29		39	0.0			Dark brownish-gray clayey SILT.
		30	0.7	24	7.9			
								Gray medium to coarse SAND, wet.
60		31		59	9.5			Gray stiff silty CLAY with minor sand lenses.
								Gray clayey SILT, moist.
		32	1.5	79	0.0			Gray stiff silty CLAY,, moist.
								Brown medium to coarse SAND, wet.
		33	1.4	34	0.0			Brown SILT, damp.
65								Gray stiff silty CLAY, trace medium gravel, moist.
		34	1.9	51	0.0			Brown SILT, damp.
								Gray stiff silty CLAY, trace medium gravel, moist.
		35	1.9	83	0.0			Brownish-gray medium to coarse SAND and fine to medium GRAVEL, wet.
								Gray silty CLAY, moist.
70		36	1.3	30	0.0			Brownish-gray medium to coarse SAND.
								Brownish-gray SILT, moist.
		37	1.5	35	0.0			Gray SAND and GRAVEL, damp.
								Dark gray SILT, damp.
75								Sampled to 74.0 Feet. Augered to 72.0 Feet.
80								
85								

WELL CONSTRUCTION DETAILS

4-inch diameter Stainless Steel 0.010 inch slot screen 70.0' - 60.0'
4-inch diameter Stainless Steel riser 60.0' - - 2.0' above ground
6-inch diameter Steel outer protective casing
Coarse Sand pack 72.0' - 58.0'
Bentonite seal 58.0' - 56.0'
Cement grout 56.0' - 0.0'

NOTES:

Measuring Point Elevation - 879.89
(Top of stainless steel riser)

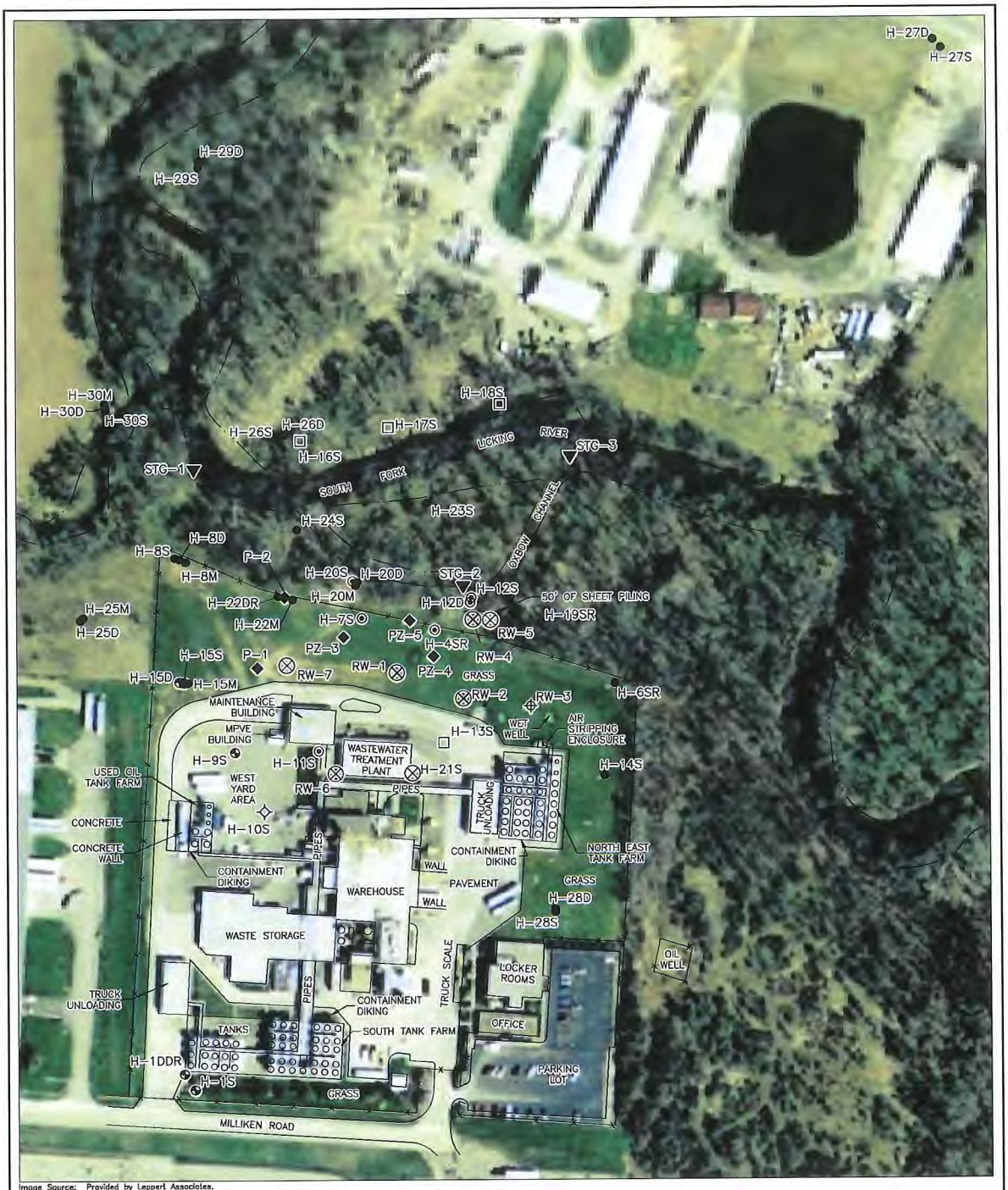

Image Source: Provided by Leppert Associates.

EXPLANATION

H-15M	GROUNDWATER MONITORING WELL AND DESIGNATION
H-4SR	CORRECTIVE ACTION GROUNDWATER MONITORING WELL AND DESIGNATION
H-1S	POST CLOSURE GROUNDWATER MONITORING WELL AND DESIGNATION
H-10S	POST CLOSURE COMPLIANCE GROUNDWATER MONITORING WELL AND DESIGNATION
RW-6	ACTIVE RECOVERY WELL AND DESIGNATION
RW-3	NON-ACTIVE RECOVERY WELL AND DESIGNATION
H-13S	FORMER MONITORING WELL AND DESIGNATION
P-1	TEMPORARY PIEZOMETER AND DESIGNATION
STG-1	STREAM GAUGE AND DESIGNATION
	FENCE
	APPROXIMATE STREAM CHANNEL

N

0 150'

Trihydro CORPORATION
1252 Commerce Drive
Laramie, Wyoming 82070
www.trihydro.com
(P) 307/745.7474 (F) 307/745.7729

FIGURE 5-1

AERIAL SITE MAP

CLEAN HARBORS - RECYCLING SERVICES OF OHIO
HEBRON, OHIO

Drawn By: PC	Checked By: HB	Scale: 1" = 150'	Date: 2/28/14	File: 449AERIALMAP2013

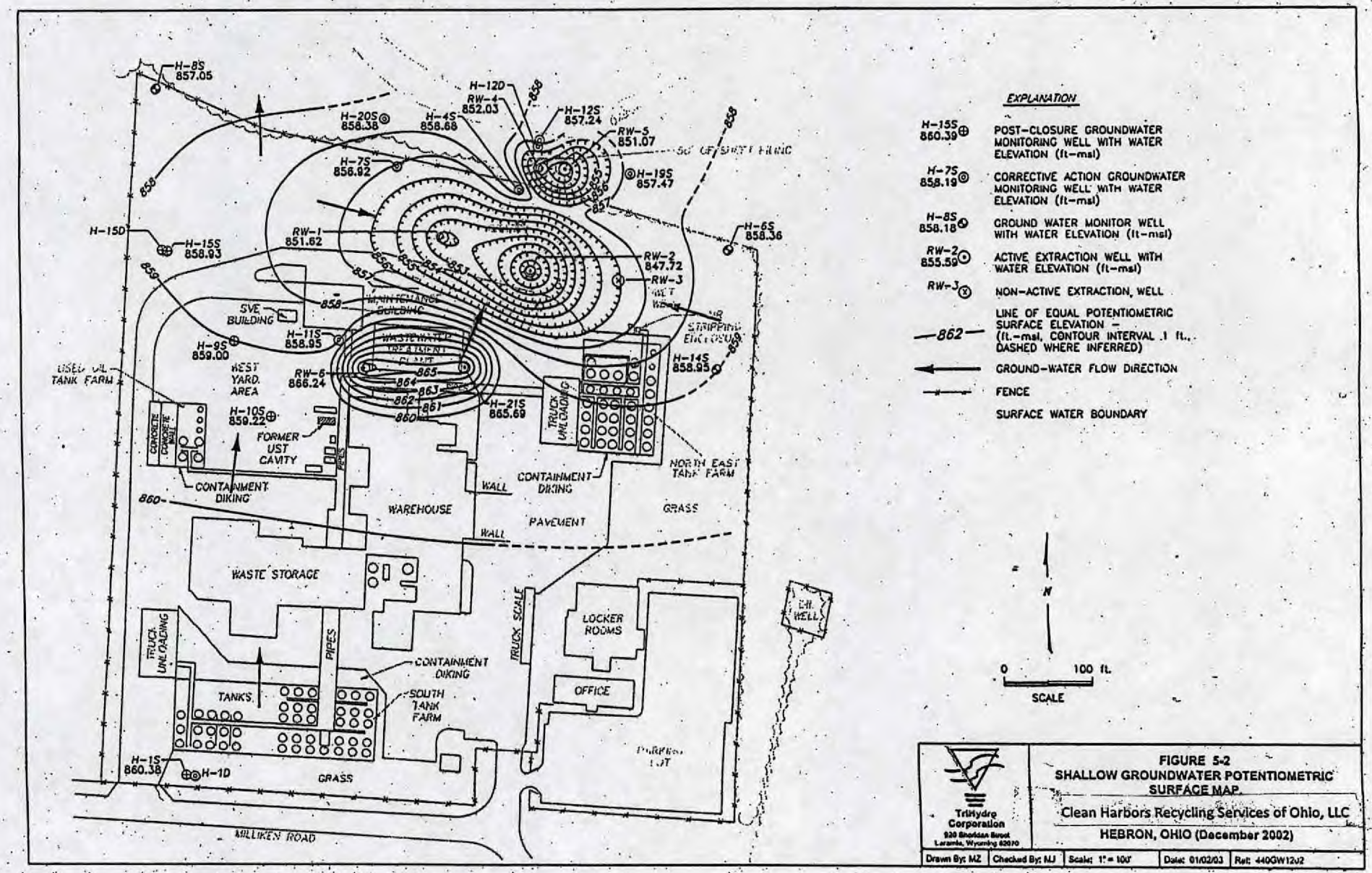
H-8S 857.05
H-12D
RW-4 852.03
H-12S 857.24
H-20S 858.38
H-4S 858.68
RW-5 851.07
H-7S 856.92
H-19S 857.47
H-15D
H-15S 858.93
RW-1 851.62
H-6S 858.36
RW-2 847.72
RW-3
SVE BUILDING
MAINTENANCE BUILDING
H-11S 858.95
H-9S 859.00
WASTEWATER TREATMENT PLANT
STRIPPING ENCLOSURE
H-14S 858.95
USED OIL TANK FARM
WEST YARD AREA
RW-6 866.24
H-21S 865.69
TRUCK UNLOADING
H-10S 859.22
FORMER UST CAVITY
CONCRETE
CONTAINMENT DIKING
NORTH EAST TANK FARM
WALL
WAREHOUSE
PAVEMENT
GRASS
WASTE STORAGE
TRUCK SCALE
LOCKER ROOMS
OFFICE
PIPES
TANKS
SOUTH TANK FARM
H-1S 860.38
H-1D
MILLIKEN ROAD
EXPLANATION
H-15S 860.39 POST-CLOSURE GROUNDWATER MONITORING WELL WITH WATER ELEVATION (ft-msl)
H-7S 858.19 CORRECTIVE ACTION GROUNDWATER MONITORING WELL WITH WATER ELEVATION (ft-msl)
H-8S 858.18 GROUND WATER MONITOR WELL WITH WATER ELEVATION (ft-msl)
RW-2 855.59 ACTIVE EXTRACTION WELL WITH WATER ELEVATION (ft-msl)
RW-3 NON-ACTIVE EXTRACTION WELL
862 LINE OF EQUAL POTENTIOMETRIC SURFACE ELEVATION – (ft.-msl, CONTOUR INTERVAL .1 ft., DASHED WHERE INFERRED)
GROUND-WATER FLOW DIRECTION
FENCE
SURFACE WATER BOUNDARY
N
0 100 ft.
SCALE
TriHydro Corporation
920 Sheridan Street
Laramie, Wyoming 82070
FIGURE 5-2
SHALLOW GROUNDWATER POTENTIOMETRIC SURFACE MAP
Clean Harbors Recycling Services of Ohio, LLC
HEBRON, OHIO (December 2002)
Drawn By: MZ
Checked By: MJ
Scale: 1" = 100'
Date: 01/02/03
Ref: 440GW12v2

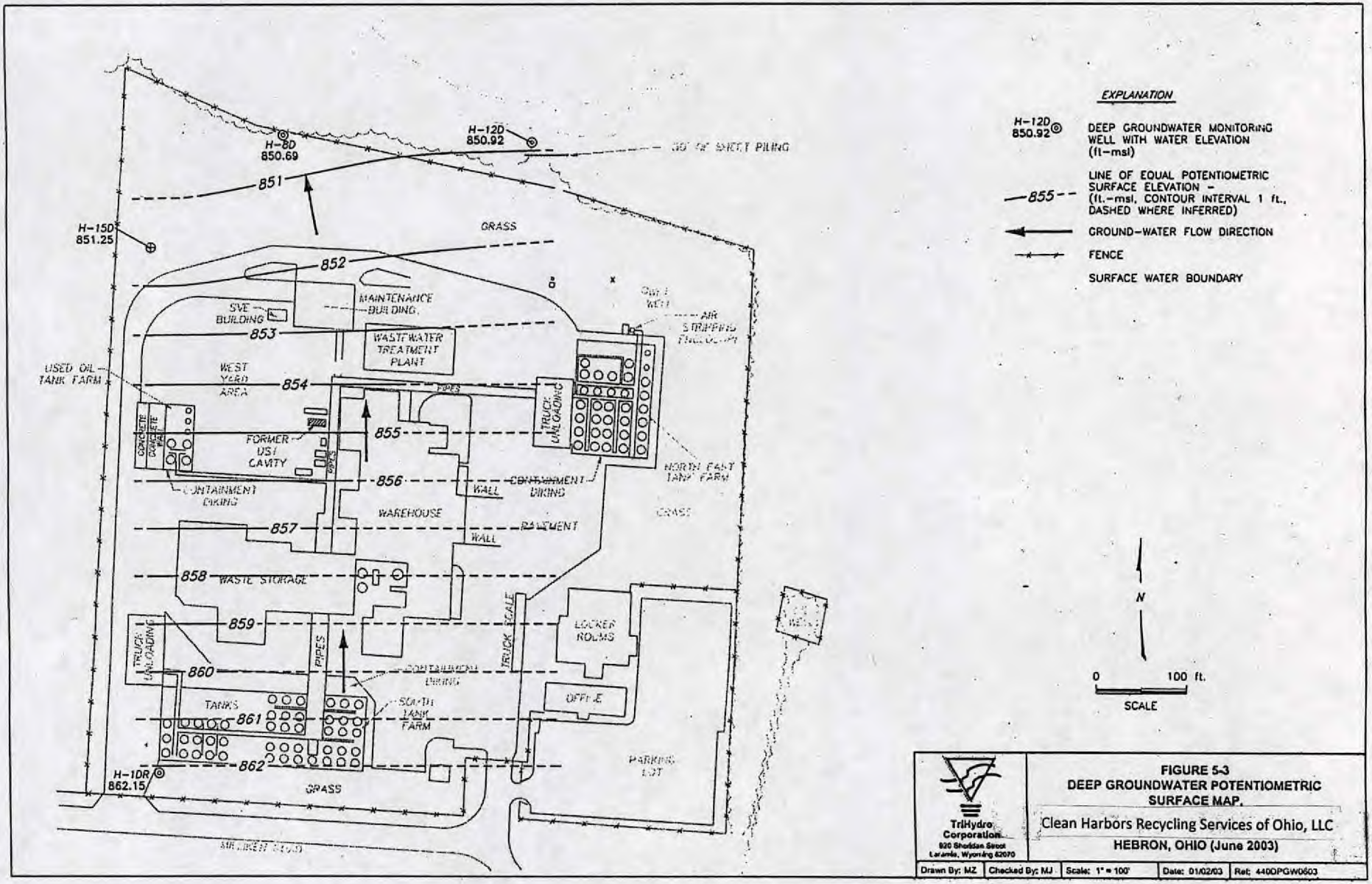

TriHydro Corporation
920 Sheridan Street
Laramie, Wyoming 82070

FIGURE 5-3
DEEP GROUNDWATER POTENTIOMETRIC SURFACE MAP.

Clean Harbors Recycling Services of Ohio, LLC

HEBRON, OHIO (June 2003)

Drawn By: MZ	Checked By: MJ	Scale: 1" = 100'	Date: 01/02/03	Ref: 440DPGW0603

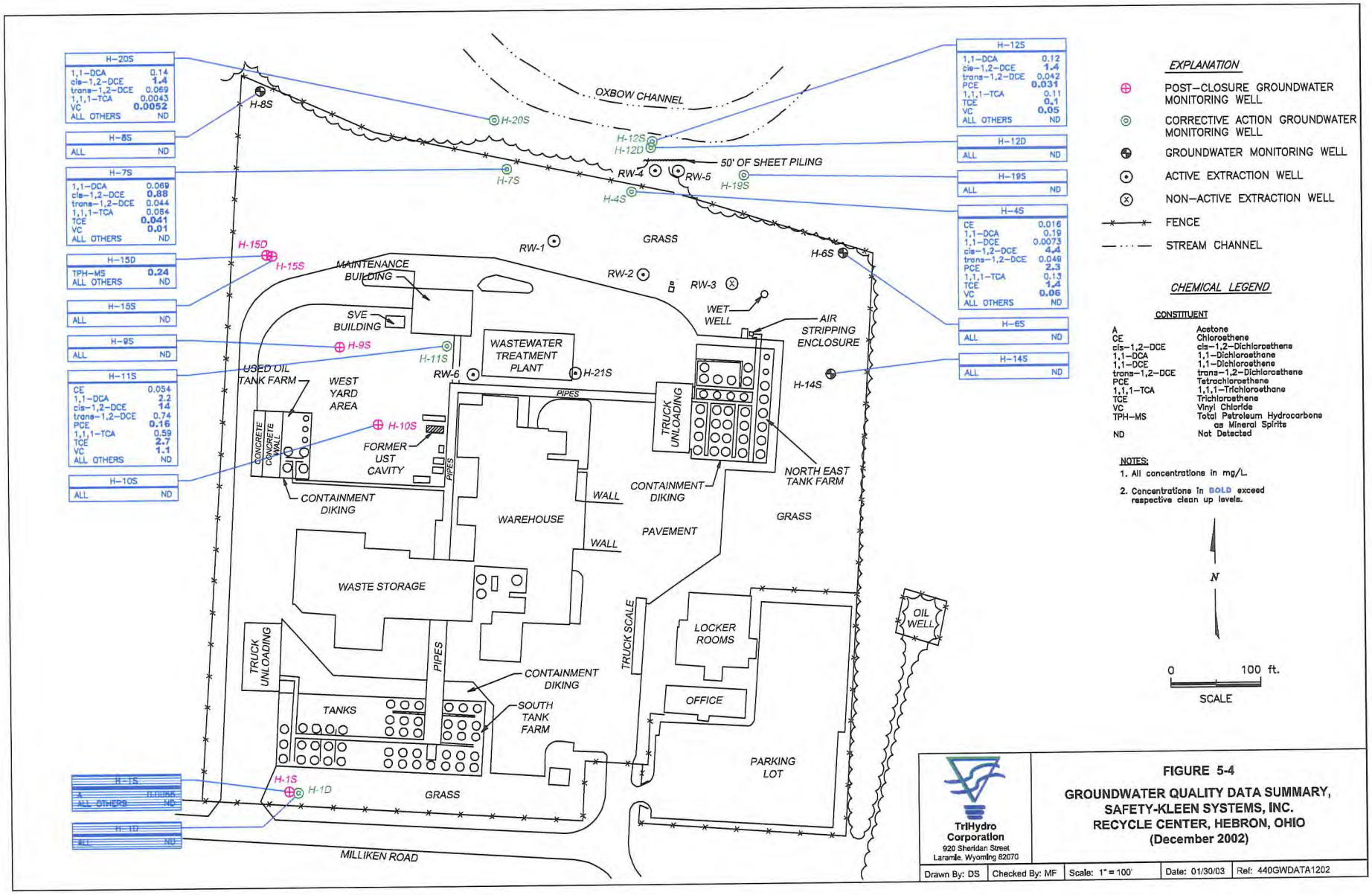
H-20S
1,1-DCA 0.14
cis-1,2-DCE 1.4
trans-1,2-DCE 0.069
1,1,1-TCA 0.0043
VC 0.0052
ALL OTHERS ND
H-8S
ALL ND
H-7S
1,1-DCA 0.069
cis-1,2-DCE 0.88
trans-1,2-DCE 0.044
1,1,1-TCA 0.054
TCE 0.041
VC 0.01
ALL OTHERS ND
H-15D
TPH-MS 0.24
ALL OTHERS ND
H-15S
ALL ND
H-9S
ALL ND
H-11S
CE 0.054
1,1-DCA 2.2
cis-1,2-DCE 14
trans-1,2-DCE 0.74
PCE 0.16
1,1,1-TCA 0.59
TCE 2.7
VC 1.1
ALL OTHERS ND
H-10S
ALL ND
H-1S
A 0.0085
ALL OTHERS ND
H-1D
ALL ND
H-12S
1,1-DCA 0.12
cis-1,2-DCE 1.4
trans-1,2-DCE 0.042
PCE 0.031
1,1,1-TCA 0.11
TCE 0.1
VC 0.05
ALL OTHERS ND
H-12D
ALL ND
H-19S
ALL ND
H-4S
CE 0.016
1,1-DCA 0.19
1,1-DCE 0.0073
cis-1,2-DCE 4.4
trans-1,2-DCE 0.049
PCE 2.3
1,1,1-TCA 0.13
TCE 1.4
VC 0.06
ALL OTHERS ND
H-6S
ALL ND
H-14S
ALL ND
OXBOW CHANNEL
H-8S
H-20S
H-12S
H-12D
50' OF SHEET PILING
RW-4
RW-5
H-19S
H-7S
H-4S
H-15D
H-15S
MAINTENANCE BUILDING
RW-1
GRASS
RW-2
RW-3
H-6S
WET WELL
AIR STRIPPING ENCLOSURE
SVE BUILDING
H-9S
H-11S
WASTEWATER TREATMENT PLANT
H-21S
USED OIL TANK FARM
WEST YARD AREA
RW-6
PIPES
TRUCK UNLOADING
H-14S
CONCRETE
CONCRETE WALL
H-10S
FORMER UST CAVITY
PIPES
NORTH EAST TANK FARM
CONTAINMENT DIKING
WALL
CONTAINMENT DIKING
WAREHOUSE
PAVEMENT
GRASS
WALL
WASTE STORAGE
TRUCK SCALE
LOCKER ROOMS
OIL WELL
TRUCK UNLOADING
PIPES
CONTAINMENT DIKING
TANKS
SOUTH TANK FARM
OFFICE
PARKING LOT
H-1S
H-1D
GRASS
MILLIKEN ROAD
EXPLANATION
POST-CLOSURE GROUNDWATER MONITORING WELL
CORRECTIVE ACTION GROUNDWATER MONITORING WELL
GROUNDWATER MONITORING WELL
ACTIVE EXTRACTION WELL
NON-ACTIVE EXTRACTION WELL
FENCE
STREAM CHANNEL
CHEMICAL LEGEND
CONSTITUENT
A Acetone
CE Chloroethene
cis-1,2-DCE cis-1,2-Dichloroethene
1,1-DCA 1,1-Dichloroethene
1,1-DCE 1,1-Dichloroethene
trans-1,2-DCE trans-1,2-Dichloroethene
PCE Tetrachloroethene
1,1,1-TCA 1,1,1-Trichloroethane
TCE Trichloroethene
VC Vinyl Chloride
TPH-MS Total Petroleum Hydrocarbons as Mineral Spirits
ND Not Detected
NOTES:
1. All concentrations in mg/L.
2. Concentrations in BOLD exceed respective clean up levels.
N
0 100 ft.
SCALE
TriHydro Corporation
920 Sheridan Street
Laramie, Wyoming 82070
FIGURE 5-4
GROUNDWATER QUALITY DATA SUMMARY, SAFETY-KLEEN SYSTEMS, INC. RECYCLE CENTER, HEBRON, OHIO (December 2002)
Drawn By: DS
Checked By: MF
Scale: 1" = 100'
Date: 01/30/03
Ref: 440GWDATA1202

6

SECTION 6

PROCEDURES TO PREVENT HAZARDS

This section describes the measures that the Clean Harbors, Hebron Recycle Center has taken and will take to minimize the possibility of an accident or emergency at the facility. The information provided in this section is submitted in accordance with the requirements of OAC 3745-50-44, 3745-54-14, 3745-54-15, and 3745-54-17.

6.1 SECURITY [OAC 3745-54-14 and OAC 3745-50-44 (A)(4)]

6.1.1 Security Procedures and Equipment [OAC 3745-54-14 (B) and (C)]

Signs are posted at the entrance of the facility and additional locations so that they are visible from any approach at twenty-five feet. The signs are marked: "Danger-Unauthorized Personnel Keep Out," or similar language. Entry to the facility is controlled through gates at the entrances to the facility.

The facility is completely surrounded by a six foot high chain link fence with three strands of barbed wire which is maintained in good repair. The combination of gates, signs and fences prevents the unknowing entry of people or livestock into the facility and minimizes the potential for unauthorized entry.

Entry to the facility is monitored seven days a week, 24-hours a day. Gates are closed at all times when the facility is not in operation, and two cameras are used to detect any unauthorized visits. One camera is positioned at each of the gates to the facility. The cameras are monitored by the office personnel (two monitors in the Administrative Office) and shift supervisor (two monitors in the Shift Supervisor's Office). The Administrative Office and the Shift Supervisor's Office are the only two remote locations from which the gates can be opened. The facility can also be entered after hours through a walk-in gate, which is equipped with an electronic lock that requires an access code. The walk-in gate shuts itself and locks behind any individual passing through it.

An intercom system base station is located in the office area. An internal telephone system is provided. The same telephone system is used for communications outside the plant. To gain access to the facility, one must press an intercom button at the front gate, which will sound a chime in the Administrative Offices and the Shift Supervisor's Office. The office personel, Shift Supervisor, or the guard will view the visitor on the video monitor(s), speak with the visitor over the intercom system, and determine whether access will be allowed to the visitor. If access is allowed, the visitor will be admitted through the gate. Once the truck has passed through the gate the same person will close the gate again. To exit the facility, the same procedure is followed, only using an intercom located inside the gate. After hours and on weekends, someone in or near the Supervisor's office will respond and control entrance/exit to the facility.

6.1.2 Waiver

Clean Harbors is not requesting any waivers for security procedures and equipment.

6.2 GENERAL FACILITY INSPECTIONS

6.2.1 General Inspection Requirement [OAC 3745-50-44(A)(5), 3745-54-15, and 3745-54-33]

Clean Harbors conducts regular inspections of the facility for equipment malfunctions, structural deterioration, operator errors and discharges that could cause or lead to the release of hazardous waste constituents and adversely affect the environment or threaten human health.

Plant personnel are responsible for conducting the inspections of all hazardous waste management areas. Clean Harbors will conduct inspections to detect the following problems:

- Structural deterioration;
- Damaged or missing parts on safety, emergency and monitoring equipment;
- Defects of security devices; and
- Any release of hazardous wastes.

Table 6-2 lists the various inspections and the frequency they are conducted:

Table 6-2

Inspection	Frequency
Container Storage Areas	Daily
Tank Farms	Daily
Facility (Security, Lighting, Warnings)	Daily
Fire Extinguishers	Weekly
Emergency Generator	Weekly
Fire Equipment (Fire Pump, Hydrants/Valves, Sprinklers)	Weekly
Communications	Weekly
Monitoring Equipment (LEL Monitors)	Weekly
Emergency Eyewash/Shower	Weekly
Emergency Respiratory Equipment (Oxygen Bottles)	Weekly
Spill Boxes	Weekly
Emergency Exit Signs/Lights	Monthly
Facility Doors	Monthly
Facility Firewater Sprinkler System	Monthly
Tank High Level Alarms	Monthly
SCBA's	Monthly

All daily, weekly, and monthly results of inspections are entered on inspection forms. Any irregularities are forwarded to the Operations Manager for action on the day of the detection. Remedial actions will be taken according to the following:

- Remedy any deterioration or malfunction of equipment or structure which the inspection reveals; and
- Carry out the remedial action on schedule which insures that the problem does not lead to an environmental or human health hazard.

Inspections and any actions taken are logged on the appropriate form and are kept for at least three years.

6.2.2 Container Inspection [OAC 3745-55-74]

Inspections of the hazardous waste storage areas are conducted daily. In accordance with OAC 3745-55-74, information reported on the daily inspection report includes aisle space, condition of containment area, condition of containers, distance from the edge of the dike (not to be less than three feet), condition of the loading and unloading areas, and any leaking containers or accumulated liquids.

The inspection form is signed by the inspector, along with the date and time of inspection. If the status of the particular item is unacceptable, appropriate and complete information is recorded, including date, time, and nature of repairs and remedial action.

6.2.3 Tank Inspection and Tank Condition Assessment [OAC 3745-50-44 and 3745-55-95]

Daily inspections are conducted each operating day on the hazardous waste tank storage areas and loading and unloading areas (truck stations). Information recorded on the daily checklist includes: inspecting for leaks or spills, the condition of the spill control equipment, and the conditions of the construction materials of the tanks and dikes.

The inspection form is signed by the inspector, along with the date and time of inspection. If the status of the particular item is unacceptable, appropriate and complete information is recorded, including date, time, and nature of repairs and remedial action.

Tank construction materials such as tank shell, protective coating, pipe connections and vents are inspected each operating day. The secondary containment areas surrounding the tanks are inspected daily for cracks, deterioration, erosion, and water or solvent in sumps. Daily inspections are conducted on the waste feed cut-off system, and tank contents are inventoried each operating day.

Inspections for tanks, internally, are done by ultrasonic thickness detection devices and are conducted every three years. This is used for a random check of the construction material (roof, bottom and top), joints and any internal supports for corrosion, etc. The procedure for safely entering emptied tanks so that the interior can be inspected are described in Attachment 6-1.

Inspections of the tank overfill equipment are performed monthly. These inspections test that the proper tank light flashes red in the control room, the proper pumps are disabled, the printer is functioning properly, and the audible alarms are working properly.

6.3 DOCUMENTATION Of PREPAREDNESS & PREVENTION REQUIREMENTS

All facilities were designed, constructed and are operated to minimize the possibilities for an explosion, fire, or sudden release of solvents. Details concerning tank system design criteria are included in Section 4. The location of emergency equipment is indicated on Exhibit 5.

6.3.1 Communications [OAC 3745-54-32(A) and (B)]

Internal Communications

The internal communication system at the Clean Harbors Hebron facility consists of telephones and intercoms found in key locations throughout the plant.

The current locations of telephones are:

Location	Minimum Number Of Phones
Administrative Office	12
Laboratory	4
Maintenance Area	2
Locker Rooms	4
Truck Stations (2 Areas)	2 (1 each in Truck Station 1 & 2)
Training Room	1
Shift Supervisor's Office-Plant	2
EHS Trailer	2

There is also one portable cellular phone for emergency use kept in the administrative office area.

There is one intercom located in each of the following areas: outside the office building, outside the maintenance building, in Truck Stations No. 1 and 2, in the Northeast corner of Container Storage Area No. 1, in the Still Room, in the water treatment area, in the Electrical room, in the Laboratory, in the Boiler room, in the Cooker area, at Truck Station No. 7, in the Hydrapulper building, at Tank Farm Nos. 1, 2, and 4, and in the Maintenance Building. There are also three intercoms located in Container Storage Area No. 2, six intercoms in the locker room, and two in the administrative office building. The P.A. (Public Address) system is used for paging personnel and announcing emergencies.

All personnel are trained to contact the Emergency Coordinator in the event of an emergency. Estimated contact time for any emergency is one minute.

Two-way radios are also utilized for communication at the Hebron facility. Personnel typically equipped with radios may include the following: the shift supervisor; Cooker operator; Still Room operator; maintenance personnel; the plant engineer; warehouse personnel; lab worker; and front office personnel. The specific individuals carrying two-way radios at any given time may vary according to the personnel on-site and on the operations which are taking place at the facility.

External Communications

Outside phone lines are located near all storage and process areas. If outside assistance is required, the request could be made to the outside agency within one minute and it is estimated that fire assistance would be on site within ten minutes.

The fire alarm system at the Clean Harbors Hebron facility is connected to the fire water system. There are two local automatic fire alarms, one located outside the boiler room and the other located outside Truck Station No. 1. The fire alarms are activated whenever the fire water sprinkler system is used. The alarm system is used with the P.A. (Public Address) system in case of emergencies.

6.3.2 Water for Fire Control [OAC 3745-54-32(D)]

The facility is protected by three types of fire suppression systems: water cannons, foam water cannons, and a sprinkler system. All three systems are supported by a ten inch city water supply line. The Village of Hebron maintains a 400,000 gallon elevated storage tank. The piping connecting the elevated storage tank to the facility is approximately 8,800 feet long. The Village of Hebron has a refill capability of approximately 2,500 gpm. The Clean Harbors facility has a 1,000 gpm Peerless booster pump. The booster pump has the capacity to increase the water pressure to 125 psi above the input pressure from the city line. See Attachment 6-2 for further details on the facility's fire protection system.

The fire water sprinkler system is activated in the buildings by heat melting the fusible link in the sprinkler head, releasing the water or foam solution from that particular head. This is true throughout the facility, except for Truck Station No. 1, which operates on a dry system. Heat melts the fusible links which release air pressure in the system, causing the main sprinkler valve to open and release the water or foam solution to the sprinkler heads. Upon loss of electrical power to the facility, a natural gas powered emergency generator will automatically start and the power for the AFFF foam pump will automatically be switched to the emergency generator. See Exhibit 4.

6.3.3 Aisle Space Requirement [OAC 3745-54-35]

Adequate aisle space will be maintained to allow unobstructed movement of personnel, fire protection equipment and decontamination equipment to any area of the facility operation in an emergency. No hazardous waste storage tank or container storage area may be within fifty feet of the facility property line. The minimum aisle space between rows of drums in the Container Storage Areas is two feet. Containers are stored at least three feet from the edge of any dike not protected by a side wall. Additionally, clearance of at least three feet is maintained around all columns in the Container Storage Areas. Pallets placed next to a wall will be situated so that the drums on the pallet can be easily inspected. This arrangement allows unobstructed movement of personnel to ensure that all drums are visually inspected. The aisle space maintained ensures unobstructed movement of personnel for fire fighting and spill response purposes. In the event that a leaking drum or other problem drum is identified during an inspection, Clean Harbors personnel will relocate drums and pallets from the drum row until the problem drum is exposed and can be worked on or removed. The maximum number of pallets in a row of drums will be twelve. Therefore, the time required to relocate drums that might obstruct access to a problem drum would be approximately 15 to 30 minutes.

6.3.4 Arrangements/Agreements with Local Authorities [OAC 3745-54-37]

Copies of the Contingency Plan, Section 7 of this application, have been furnished to the Hebron Police Department, Hebron Fire Department, and the Licking Memorial Hospital. The Contingency Plan includes a facility layout, properties of the hazardous waste handled and associated hazards, entrances to and roads inside the facility, and evacuation routes. All updates of the plan will be submitted to these entities and Ohio EPA. The Hebron Fire Department has been familiarized with the facility. In addition, Clean Harbors maintains a 24-hour emergency hotline to the 3E Company, which has all the Material Safety Data Sheets for hazardous raw products stored at the facility and will assit the facility if outside remediation response is needed.

The Emergency Coordinators have agreed, verbally, to provide emergency assistance as needed.

Clean Harbors has the equipment, personnel, and training on site to handle most incidents.

6.4 PREVENTIVE PROCEDURES, STRUCTURES, AND EQUIPMENT

6.4.1 Loading and Unloading Operations [OAC 3745-50-44(A)(8)(a)]

Bulk loading and unloading operations take place in Truck Station Nos. 1, 2, and 4. Tank Farm Nos. 1, 2, 4, and 6 are used to store hazardous wastes.

The greatest potential for accidents or spills to occur at the site would be at solvent transfer points within the facility where trucks are unloaded. Within these areas, problems could potentially occur with equipment such as pumps, valves, piping, and fill controls. The following table lists the equipment available for spills and decontamination, as found in the facility's spill boxes.

TABLE 6-1
SPILL CONTROL AND DECONTAMINATION EQUIPMENT INVENTORY

EQUIPMENT	MINIMUM QUANTITY
HELMET W/FACE SHIELD	1
RESPIRATOR CARTRIDGES	5 PAIR
GOGGLES	3 BOXES
SAFETY GLASSES	3 BOXES
SAFETY GLOVES	2 BOXES
NYLON ROPE	2 PIECES
SAFETY MANUAL	1
MUSLIN SHEET	1
DUCT TAPE	1 ROLL
CAUTION/DANGER TAPE	1
SQUEEGEES	5
BROOM	3
LONG SHOVEL	1
SHORT SHOVEL	1
RAKE	1
LONG HANDLE SCRAPER	1
ABSORBING PAD BUNDLE	1
MASK CARTRIDGE FILTER	1 BOX/5 PAIR
CARTRIDGE SAFETY MASK	1 FULL FACE
RUBBER BOOTS	1 PAIR
TYVEK SUITS	25
DRUM LIFTER	1

Transfer to or from tanker trucks will only take place in a truck station with secondary containment. Tankers will be electrically grounded during transfer operations which will be observed at all times by a properly trained Clean Harbors employee. This observation ensures that any overfills are prevented, and that any spills or leaks from tanks or lines will be noted and responded to immediately. Tanks are equipped with level gauges and high level alarms. Sufficient freeboard is maintained to prevent overfilling of the tanks. Section 4.3.3 describes the high level alarm system.

Maintaining tank inventory records and proper operator training also insures that tanks are not overfilled upon unloading from the trailer trucks. Hoses and unloading pipes are drained and stored so that all of the solvent is caught and returned to storage. Lock handles and gaskets are inspected to insure they are in good repair. Operators are instructed in the proper use and operation of the above devices. No spark or heat producing equipment is permitted in the vicinity of the tanks being loaded and unloaded. The entire facility, inside the fence, is considered a "No Smoking" area and is so posted. Smoking is permitted in the lunch room.

All transfers of fluid occur through enclosed lines with shutoff valves. Fluids are directed to enclosed tanks. Pumps are equipped with mechanical seals and placed on pads with adequate drainage.

Container (drum) loading and unloading takes place in Truck Station Nos. 3, 5, and 6 (see Exhibit 2). Containers are taken off the trucks by a forklift and separated by lot numbers (i.e., customers). These containers are sampled to determine if they are acceptable for recycling. After sampling, these containers are taken on pallets to a designated drum storage area, Container Storage Area Nos. 1 or 2. The drum storage areas have forklift ramps to facilitate movement of the forklift. If drum storage areas are full, containers may be stored in truck stations Nos. 1 and 2. If the containers that have been sampled are rejected, these containers will be placed in a permitted storage area and segregated until shipment back to the customer or an alternate TSDF.

6.4.2 Runoff [OAC 3745-50-44(A)(8)(b)]

Container Storage Area 1 is covered by a canopy, and there is a variable height berm (six to twelve inches) surrounding the container storage shelter to prevent any runoff.

As discussed in Section 4.2.3, Container Storage Areas 2B, 2D and 2E are independent storage areas with distinct secondary containment systems to prevent runoff from these areas. Exhibit 24A shows that the floors in Areas 2B, 2D, and 2E are sloped to their respective sumps. Exhibit 24D shows the relative floor elevations in these areas. Runoff from Area 2E (which includes Truck Station No. 6) will be prevented by the six inch curb surrounding this storage area on the east, north, and west sides, and by the one and one half inch access ramp (curb) on the south side, as shown on Exhibit 24A.

Runoff from the tank farms (see Exhibit 9) is contained by concrete dikes. For further details see the discussion of secondary containment in Section 4.2.3. In the unlikely event that a spill or leak is detected in the secondary containment system, the material would be collected in the dike area and depending on the volume, either pumped to drum containers for storage or hauled by tanker truck to a permitted hazardous waste disposal facility.

Runoff is controlled for each of the Truck Stations. Truck Station Nos. 1 and 2 are enclosed as indicated in Exhibits 40A and 40B and 41A and 41B, respectively. Truck Station Nos. 3 and 6 are sloped to the dock areas, which have canopies that extend over the end of the trailers so that the doors are covered during unloading. While Truck Station No. 4 is not covered, runoff is contained by concrete curbing as indicated by Exhibit 42. Truck Station No. 5 is covered with a canopy, is enclosed by walls on three sides, and is sloped down toward the unloading area for containment as shown in Exhibit 43.

A storm sewer cut-off sump located at the north end of the facility is closed at all times and therefore contains all sumps, except when manually opened to release accumulated rainwater. Exhibit 9, Sewer Map, depicts the layout of the sewer system at this facility.

6.4.3 Water Supplies [OAC 3745-50-44 (A)(8)(c)]

Ground water contamination is prevented by eliminating discharge of hazardous materials onto unprotected ground. The container storage area is constructed of a concrete base and includes sumps to contain leaks, spills and precipitation. If there should be a release outside the containment areas, the release will be contained by drumming, diking, or blocking the flow of material with absorbent socks or similar temporary barriers. Any contaminated soils will be excavated and any contaminated surface water will be pumped for temporary storage in containers or tanks prior to off-site disposal as hazardous waste or on-site

processing if possible. More specific spill response details are a function of the specific incident.

6.4.4 Equipment and Power Failure [OAC 3745-50-44 (A)(8)(d)]

In the event of a major equipment failure at the facility, the company will not receive more feed stock (spent solvents) from the generators, thus stopping production. A major power failure would halt production, regardless of the area being run or the waste being processed. Warehouse personnel will have verbal contact with anyone around the tank farms in case of power failure. The office area has verbal contact with the tanker station, lab, shop and pump room. Emergency telephone numbers are posted near each telephone. If necessary, outside help (fire department, police department or State or local emergency response teams) will be contacted.

In the event of a power outage or interruption, the boiler is shut down along with other operating equipment. These shutdowns do not have any adverse effects on the plant nor do they create a dangerous condition for the waste management in the facility since all the wastes are stored in tanks or containers. In case of power failure while pumping the waste from the tanks, the flow can be stopped by manual shut off valves. In the case of shutdown, if storage area is at capacity, the containers would be taken to another Clean Harbors facility. Should there be a loss of electricity, a natural gas-powered emergency generator will automatically start and the power for the AFFF foam pump will automatically be switched to the emergency generator. This generator runs only the water and foam pumps, and does not provide any emergency lighting. Each individual emergency light is run off of it's own self contained battery. A power failure automatically trips the battery to supply emergency lighting.

6.4.5 Personal Protection Equipment [OAC 3745-50-44 (A)(8)(e)]

General information on the major chemical components of the material in the container and tank storage areas is provided in the Contingency Plan (see Section 7). The Material Safety Data Sheets present information on various chemicals regarding toxicity, fire and explosion hazards, protective equipment recommendations and first aid. Available protective equipment routinely used by facility personnel is listed below. Use of protective equipment is covered in initial and annual Personnel Training Programs (see Section 8) which satisfies the Occupational Safety and Health Standards of 24 CFR part 1910 Subpart I - Personal Protective Equipment.

Available, routinely used personal protective equipment includes:

- Helmet with face shield;
- Half-face respirator and cartridges;
- Safety glasses and gloves;
- Hard hat;
- Safety shoes;
- Plastic apron;
- Goggles;
- Rubber boots; and
- Tyvek suits.

All process areas occupied by facility personnel are ventilated to ensure that harmful levels of vapors do not accumulate. The ventilation system has been designed by qualified engineers to ensure that an adequate amount of building ventilation is provided.

Furthermore, personnel monitoring is routinely conducted to ensure that engineering controls are in place and appropriate personal protective equipment is being utilized.

6.5 PRECAUTIONS TO PREVENT IGNITION OR REACTION OF IGNITABLE OR REACTIVE WASTE [OAC 3745-50-44 (A)(9) AND 3745-54-17 (A)]

Reactive material is not, nor is proposed to be handled at this facility.

All ignitable materials are kept away from ignition sources. Smoking is not permitted within the fence, except for the lunch room; open flames are confined to designated safe areas. "No Smoking" signs are conspicuously placed at all entrances to the facility.

Materials are handled so that they do not:

- Generate extreme heat or pressure, fire or explosion;
- Produce uncontrolled toxic mists, fumes, dusts or gases;
- Produce uncontrolled fires or gases in sufficient quantities; or
- Damage the structural integrity of the control or containment device.

No RCRA reactive hazardous (D003) waste is stored in containers or tanks at this facility. The storage areas for containers of ignitable waste are located more than 50 feet from the property line. All storage tanks are in compliance with National Fire Protection Agency requirements.

Hot Work procedures are followed whenever cutting or welding work is performed in areas where ignitable wastes are handled.

6.5.1 General Precautions for Handling Ignitable or Reactive Waste and Mixing of Incompatible Waste [OAC 3745-50-44 (A)(9) and 3745-54-17(B)]

Spark-proof tools are used around the flammable storage areas. All tanks and containers are grounded, stored upright, and stored away from all sources of ignition. There are designated storage areas for flammable materials. The Hebron Recycle Center does not accept any reactive wastes. Refer to Section 6.5.4 for a discussion of how incompatible waste will be handled.

6.5.2 Documenting Compliance with General Requirements for Ignitable, Reactive or Incompatible Waste [OAC 3745-50-44 (A)(9), 3745-54-17 (C)]

All storage tanks are in compliance with National Fire Protection Agency requirements.

6.5.3 Management of Ignitable or Reactive Wastes in Containers

Precautions taken in the Container Storage Areas to prevent accidental fire and explosion include: the proper storage of containers (e.g., stacking, aisle space), the labeling and sealing of containers, containment trenches and appropriate warning signs.

Prior to storage, each container is sealed to prevent precipitation from entering. Labels on the drum identify the contents of the container, the accumulation date, the contained wastes, and the associated hazard. Containers are generally stored on pallets, but

may be stored directly on the concrete pad, in such a manner as to minimize contact with precipitation, leaks or spills.

As shown on the facility map (Exhibit 2), hazardous wastes are not stored within 50 feet of the property lines.

6.5.4 Management of Incompatible Wastes in Containers [OAC 3745-50-44(C)(1)(d) and 3745-55-77)

Previous knowledge of the waste streams indicates that the core waste streams are compatible. However, certain proposed industrial waste streams waste codes may be deemed incompatible according to USEPA guidance (A Method for Determining the Compatibility of Hazardous Wastes, EPA-600 2-80-076, April 1980). Therefore, based on discussions with Ohio EPA, Clean Harbors will assume that the following waste codes are incompatible with other waste streams unless there is knowledge which demonstrates otherwise. Demonstrated knowledge will include: determination by the above mentioned guidance document, or receipt of the waste which is already commingled, or testing the waste stream. Testing of the waste stream will be conducted and will be documented in the material profile evaluation report (refer to example in Attachment 3 of Appendix 3-1).

Waste codes which are deemed to be incompatible include:

D002	D005	D007	D010	D037	D038	D041	D042	D043
F005	F006	K022	K060	K086	K087	U008	U110	U112
U113	U118	U162	U188	U196				

Segregation of these waste streams will include, but is not limited to:

Separation, dike, berm,
Isolation of the waste with portable dike, plastic spill control pallet, or berm.

6.5.5 Management of Ignitable or Reactive Wastes in Tank Systems

Precautions taken in the Tank Storage Areas to prevent accidental fire and explosion include: the following of National Fire Protection Agency requirements for flammable and combustible liquids and appropriate warning signs.

6.5.6 Management of Incompatible Wastes in Tank Systems [OAC 3745-50-44(C)(2)(j) and 3745-55-99)

Previous knowledge of the waste streams indicates that the core waste streams are compatible. However, certain proposed industrial waste streams waste codes may be deemed incompatible according to USEPA guidance (A Method for Determining the Compatibility of Hazardous Wastes, EPA-600 2-80-076, April 1980). Therefore, based on discussions with Ohio EPA, Clean Harbors will assume that the following waste codes are incompatible with other waste streams unless there is knowledge which demonstrates otherwise. Demonstrated knowledge will include: determination by the above mentioned guidance document, or receipt of the waste which is already commingled, or testing the waste stream. Testing of the waste stream will be conducted and will be documented in the material profile evaluation report (refer to example in Attachment 3 of Appendix 3-1).

Waste codes which are deemed to be incompatible include:

D002	D005	D007	D010	D037	D038	D041	D042	D043
F005	F006	K022	K060	K086	K087	U008	U110	U112
U113	U118	U162	U188	U196				

Segregation of these waste streams will include, but is not limited to:

1. They will not be placed in the same tank with an incompatable waste,
2. They will not be placed in an unwashed tank that previously held an incompatible waste

7

SECTION 7

CONTINGENCY PLAN

The information contained herein is prepared in accordance with the requirements for a Contingency Plan as specified in OAC 3745-54-50 through 56.

The intent of OAC 3745-54-50 through 56 (Contingency Plan and Emergency Procedures) is to ensure that facilities that treat, store, or dispose of hazardous wastes have established the necessary planned procedures to follow in the event an emergency situation should arise.

The purpose of this Contingency Plan is to prepare a specific course of organized and coordinated action to be followed in case of an emergency, and to minimize hazards to human health or the environment.

The Contingency Plan is implemented by the General Manager or Emergency Coordinator(s) in the event of a fire, explosion, or release of hazardous waste which could threaten human health or the environment.

This plan is prepared in a format so that the information may be easily updated and photocopied for educational purposes. This Plan and all revisions to the Plan are to be kept at the facility and regularly updated throughout the operating life of the facility. Copies are also provided to local authorities and emergency teams as listed in Attachment 7-1 which may be called upon to provide emergency service. The most current Contingency Plan is always available at the recycle center.

Any questions concerning this Plan should be directed to the General Manager or the Compliance Manager, at the Hebron Recycle Center.

7.1 GENERAL INFORMATION [OAC 3745-54-52]

This Contingency Plan is for Clean Harbors Recycling Services of Ohio, LLC, Hebron Recycle Center located at 581 Milliken Drive, S.E., Hebron, OH 43025. Clean Harbors is a recycler of industrial solvents. Clean Harbors Recycling Services of Ohio, LLC is the owner of the facility. The main telephone number for the facility is (740) 929-3532.

The facility is a solvent recycle plant. It receives various wastes such as; dry cleaning wastes (consisting of perchloroethylene and/or mineral spirits) and industrial solvents for toll recycling.

The Dry Cleaning wastes are received in box trailers from other Clean Harbors facilities, brokers, or directly from generators. The Dry Cleaning Process Wastes consist primarily of residues of perchloroethylene and/or mineral spirits, and are collected in sealed containers. The dry cleaning filter cartridge wastes are reduced to a processable form by a shredder and, with other forms of dry cleaning wastes, are reclaimed at this facility. Solvents for toll recycling are generally received in bulk tankers.

Other waste streams are handled by the Hebron Recycle Center for fuel blending and then sent offsite for energy recovery. These materials contain a combination of industrial solvents and organic compounds and are received in batch (e.g., 55-gallon drums) and bulk tankers.

Spent solvents consisting of primarily chlorinated solvents are received in 55-gallon containers from industrial users for storage and recycling at this facility. Spent solvent wastes from industries such as the chemical or pharmaceutical process industries received at the facility are classified as characteristic wastes (D-waste codes), non-specific source wastes (F-waste codes), listed wastes from specific sources (K-waste codes), and commercial chemical products, manufacturing intermediates, or off-specification commercial chemical products (U-waste codes). Most of the time, a waste stream will be some combination of specific components, and be categorized as a D- or F- waste.

The Hebron Recycle Center uses gravity separation, distillation, fractionation, and blending to recover or recycle organic solvents and similar materials. Solids, such as still bottoms and sludges received from customers or other Clean Harbors facilities will be blended for use in the industrial fuel program. Certain components separated by processing, residuals from recycling, and some wastes received at the facility for storage that are not amenable to processing at the facility are sent off-site for additional processing, reuse, burning for energy recovery, incineration, or disposal.

Clean Harbors stores hazardous waste prior to processing in the following areas: tank farm and container storage areas. The wastes received from the customers are stored in the facility with a total capacity as follows:

- Clean Harbors is permitted to store 1,237,500 gallons of hazardous wastes in 74 tanks and Solids Bin #2.
- The facility's maximum existing container storage capacity for hazardous wastes is 217,140 gallons.

The facility's public address system can be heard at any location throughout the plant, including process areas, container storage areas, truck stations, the locker room, and the lunch room. Therefore, all plant employees would be notified in the event of an emergency.

A site plan layout, Exhibit 5, is provided as Attachment 7-5.

7.2 EMERGENCY COORDINATORS [OAC 3745-54-52(D) and 3745-54-55]

If an emergency situation develops at the facility, the discoverer will contact an Emergency Coordinator as listed in Attachment 7-1, OAC 3745-54-52(D) and 3745-54-55. The emergency coordinators should be called in the order they are listed. The site Compliance Manager will be contacted regardless of whether or not he or she needs to act as an emergency coordinator, to offer and address specific potential environmental concerns resulting from the incident. All persons listed as Emergency Coordinators have authority to commit resources of the company to deal with emergencies for the hazardous waste management activities of the facility.

In the event that none of the listed emergency coordinators can be reached, the most senior employee of the facility should be contacted. Although he or she does not have authority to commit company resources, he or she will serve as interim Emergency Coordinator until such time as he or she can locate the proper listed coordinator and be relieved.

The job descriptions for the primary Emergency Coordinator, the General Manager, as well as the Alternate Emergency Coordinator, the *Facility Operations Supervisor and Plant Engineer and Facility Maintenance Supervisor*, are provided in Section 8, Attachment 8-1.

7.3 IMPLEMENTATION OF THE CONTINGENCY PLAN [OAC 3745-54-56 and 3745-54-51(B)]

The decision to implement the Contingency Plan will be made by the Emergency Coordinator. The following information is to provide guidance to the Emergency Coordinator in making this decision by outlining decision making criteria.

Implementation of the Contingency Plan must be carried out immediately whenever there is a fire, explosion, or release of hazardous waste or hazardous waste constituents that could threaten human health or the environment (this includes, but is not limited to, any sudden or non-sudden release of hazardous waste or hazardous waste constituents to air, soil, or surface water).

When the Emergency Coordinator makes the decision to implement the Contingency Plan, he or she will follow the Contingency Plan procedures.

7.4 EMERGENCY RESPONSE PROCEDURES

7.4.1 Notification [OAC 3745-54-56(A) and (D)]

In the event of an emergency situation the Emergency Coordinator will be immediately notified. In the event that a primary Emergency Coordinator is not available, the alternate Emergency Coordinator must be notified. Facility personnel will be notified about the emergency via the facility alarm system. The Emergency Coordinator will determine if the Contingency Plan is to be implemented and if it is, will subsequently make or direct immediate notification of the appropriate off-site authorities. Refer to Attachment 7-1 for names and telephone numbers of the Emergency Coordinators and Emergency Telephone Numbers.

The Emergency Coordinator will notify the Ohio EPA Emergency Response Office and the National Response Center. The notification will include, at a minimum, the following information:

- Name and telephone number of reporter;
- Name, address and telephone number of the owner (Clean Harbors Environmental Services, 42 Longwater Drive, Norwell, MA 02061, Ph - 800-282-0058);
- Name, address and telephone number of the facility;
- Date, time and type of incident;
- Name and quantity of material(s) involved;
- The extent of any injuries; and
- An assessment of actual or potential hazards to human health or the environment.

7.4.2 Identification of Hazardous Materials [OAC 3745-54-56(B)]

The Emergency Coordinator will identify the character, exact source, amount and extent of release. Since the locations where hazardous wastes are present are separated by reasonable distances, the wastes should be identified merely by their location. If the waste cannot be positively identified, a sample will be taken for chemical analysis. A site plan with evacuation routes is included in the Contingency Plan as Attachment 7-5.

7.4.3 Assessment [OAC 3745-54-56(C) and (D)]

The Emergency Coordinator will assess possible hazards using judgment gained from experience and training and aided by field measurements using appropriate detection equipment. The detection equipment available at the Hebron facility includes explosivity and hazardous component meters and Drager tubes and pump. The purpose of the Emergency Coordinator's assessment is to answer the following two questions:

- Is there a potential for escape of hazardous waste to the environment?
- Is there a threat to human health and safety?

If either question can be answered in the affirmative, the Emergency Coordinator will initiate the following control procedures:

1. If the Emergency Coordinator's assessment indicates that evacuation of local areas may be advisable, local authorities will be notified (using list provided in Attachment 7-1) and consulted for their agreement. The Ohio EPA must be notified as indicated in Section 7.4.1 above.

2. During an emergency, the Emergency Coordinator shall undertake all reasonable measures necessary to ensure that fires, explosions, and releases do not occur, recur, or spread to other hazardous materials at the facility. These measures must include, where applicable, stopping processes and operations, collecting and containing released waste, and removing or isolating containers.

3. If the facility ceases operations in response to a fire, explosion and release, the Emergency Coordinator will monitor for leaks, pressure buildup, gas generation, or ruptures in valves, pipes, or other equipment, wherever this is appropriate.

4. Immediately after an emergency, the Emergency Coordinator provides for treating, storing, and disposing of recovered materials, contaminated soil or surface water, or any other material that results from a release, fire, or explosion at the facility. If the collected material is recyclable (e.g., solvents or fuel feed stock), the material will be reclaimed through on-site processing units. If the material is a hazardous waste and cannot be recycled (e.g., waste solvent contaminated soil), it will be sent to an off-site hazardous waste treatment, storage, or disposal facility.

5. All emergency equipment, Attachment 7-2, listed in the Contingency Plan will be inspected following an emergency. Contaminated equipment will be cleaned of residues and decontaminated, or will be disposed and replaced. Damaged equipment will be repaired or replaced. Supplies will be replenished as necessary. Refer to Exhibit 5 for the location of emergency equipment.

The General Manager will notify the Director of the Ohio EPA and local authorities that the cleanup has been completed and that all emergency equipment is fit for its intended use before operations are resumed in the affected area(s) of the facility. The Central District office of the Ohio EPA will also be notified.

The Facility Management will note in the operating record the time, date and details of the incident that requires implementing the Contingency Plan. Within 15 days after the

incident, a written report will be submitted to the Director of the Ohio EPA on the incident, and the Central District office of the Ohio EPA will be copied on the report. The report must include:

- Name and phone number of reporters;
- Name, address and telephone number of the owner or operator;
- Name, address and telephone number of the facility;
- Date, time and type of incident;
- Name and quantity of material(s) involved;
- The extent of any injuries or possible hazards to human health or environment outside the facility;
- Estimated quantity and disposition of recovered hazardous material that resulted from the incident; and
- Assessment of actual and potential hazards.

7.4.4 Emergency Control Procedures [OAC 3745-54-52(A)]

The procedures described in the following pages will be implemented in the event of a fire, explosion, or release. Refer to Sections 4.2.3 and 6.4.3 for the proper handling of incompatible waste. Incompatible wastes will not be placed in affected areas until the spill situation is remediated.

7.4.4.1 Emergency Spill Control

Emergency Spill Control Procedures

1. Activate the alarm system to notify facility personnel about the emergency and evacuate the area, affected building or, if necessary, the entire facility.
2. If process equipment/systems are involved, shut them down if such action can be done without putting personnel at risk. Also ensure that the storm sewer cut-off sump has remained closed. The only time the storm sewer is open is during rainfall, after it has been manually opened for a storm. Stop flow of hazardous waste into a tank system or secondary containment system from which there has been a leak or spill to allow inspection of the system.
3. Report the spill to the Fire Department (Dial 911) and to the Clean Harbors designated Spill Response hot line at 1-800-645-8265.
4. Treat the injured, and summon emergency medical services (ambulance), if necessary, by dialing 911.
5. Notify the Emergency Coordinator (refer to Attachment 7-1) and, with the direction and assistance from the Compliance Manager, notify:

    A. National Response Center at (800) 424-8802;

B. Disaster Services at 800-645-8265;

C. Ohio Environmental Protection Agency Division of Emergency Response at (800) 282-9378 when EPA designated reportable quantities of extremely hazardous substances is released (SARA, Title III requirement).

6. Small spills and leaks from a container will be contained by either over packing with a larger container, or by emptying the offending container into another container. When a tank system is leaking, the damaged section of the tank system will be isolated. In the case of a leak in the pipe system, the line will be cleared of wastes. In the case of a tank leak, the contents of the tank will be pumped into another tank. In any case, the leak will be repaired, if possible (e.g., repairing valve, sealing a leak, etc.), or the leaking equipment will be replaced. If possible, leaks in tanks and containers will be temporarily stopped by plugging until the contents can be removed and a permanent repair can be made. These actions shall only be attempted by trained personnel wearing appropriate chemical protective gear. The definition of a small spill is less than 500 gallons to secondary containment and less than 100 gallons if actually released to the environment (air, soil, surface water).

7. Provide information to the Fire Department, upon their arrival, concerning the spilled material(s).

8. Trained personnel wearing appropriate protective gear shall conduct air monitoring to identify hazardous vapor concentrations in the area. Off-site evacuation of the public shall be considered by the Emergency Coordinator and local government officials.

9. If the spilled liquid is flammable, take appropriate precautions to prevent ignition of vapors. (Follow hot work permit guidelines in attachment 6-3.)

10. Efforts to contain the spill shall be initiated or continued, if applicable. For spills occurring at the truck stations, tank farms, or container storage areas, spilled waste material will normally be contained within the secondary containment system. In the event that hazardous waste is released outside the containment areas or, if the waste overflows from a containment area, contain the spill by damming, diking or blocking the flow of material with absorbent socks or similar temporary barriers. Leaking tanks, pipes or other equipment shall be plugged, patched, off-loaded, or over packed (the latter applies to small containers and drums), as appropriate, to stop the release of liquid into the area. Only trained and properly clothed personnel shall attempt these actions.

11. Pump large amounts of contained chemicals to drums or tanks for disposal or, if applicable, on-site-processing. Small quantities of chemicals spilled from a container or tank, can be absorbed using substances such as "Speedy-Dry" and placed in drums for appropriate off-site disposal as hazardous waste. Spilled or leaked material within secondary containment areas will be removed within 24 hours or in as timely a manner as possible. This action shall only be attempted, using substances such as "Speedy-Dry," by trained personnel wearing appropriate protective gear.

12. Clean all contaminated surfaces, including tanks, containment structures, containers, and ancillary equipment. Excavate any contaminated soil and pump up any contaminated surface water for temporary storage in containers prior to off-site disposal as hazardous waste or on-site processing if possible. Cleanup personnel shall wear appropriate protective gear.

13. Decontaminate all response personnel, protective gear, equipment and apparatus. Wearing of appropriate protective gear is required during decontamination operations.

14. If a release has not damaged the integrity of a tank system, the released waste will be removed and repairs, if necessary, will be made prior to returning the system to service. Attachment 6-1 of Section 6 contains a copy of the Confined Space Entry Procedures. If the release occurred from an aboveground component of a tank system that can be visually inspected, the system will be returned to service after an independent, qualified, registered, professional engineer certifies that the repaired system is capable of handling hazardous wastes without release for the intended life of the system. If a component is to be replaced, the component will be designed and installed according to the requirements for new tank systems or components in OAC 3745-55-92 and 3745-55-93. If the leak occurred in any portion of a tank system component that is not readily accessible for visual inspection (e.g., the bottom of an on-ground tank), the entire component will be provided with secondary containment in accordance with OAC 3745-55-93 prior to being returned to use.

Post Incident Procedures

Every spill shall be recorded on the Incident Report Form, Attachment 7-3, by the Emergency Coordinator or designee. A copy will then be sent to the Corporate Environmental, Health & Safety Department and the assigned Compliance Manager, who, along with Facility Management, reviews the report to determine what action should be taken to prevent similar occurrences in the future. Any release to the environment from hazardous waste storage tanks (except a leak or spill amounting to less than one pound and immediately contained and cleaned up) of reportable quantity will be reported to the Division of Environmental Response and Revitalization of Ohio EPA within 24 hours of detection. Other reports are required by law and are discussed in Section 7.7.

7.4.4.2 Fire Control Procedures

Small Fire (approximately the size of a wastepaper basket in a controlled environment):

1. Act quickly with an appropriately rated fire extinguisher to limit the spread of fire, in accordance with fire suppression training; while

2. A second person activates the fire alarm to notify facility personnel of the emergency and also reports the fire to the Fire Department (Dial 911). If only one person is present, activate the alarm first and then attempt to put out the fire, if safe.

3. If processing equipment/systems are involved, shut them down if such action can be done without putting personnel at risk.

4. Fire Department ensures that the fire has been extinguished.

Large Fire:

1. Activate the facility alarm system to notify facility personnel of the emergency, and evacuate the entire facility.

2. Report the fire to the Fire Department (Dial 911).

3. Treat the injured, and call emergency medical services (ambulance), if necessary, by dialing 911.

4. Report the fire to the Emergency Coordinator (refer to Attachment 7-1).

5. Emergency Coordinator is to notify the Ohio Environmental Protection Agency Division of Emergency Response at (800) 282-9378 and officials of the nearby community.

6. The Emergency Coordinator or designee shall provide information to the Fire Department, upon their arrival, concerning the materials involved in the fire and those nearby the fire area. The Emergency Coordinator assures the discontinuation of all flows and processes contributing to the fire, if possible.

7. Fire Department will perform any rescues and control the fire. In the event of a fire in a container storage building, access aisles are present to permit passage of firefighters and their equipment.

8. During fire suppression operations, efforts shall be taken to contain the fire suppressant and runoff from entering storm drains, drainage ditches, and waterways. These efforts will include ensuring that the stormwater cutoff gate is closed, utilizing the facility vacuum truck to remove liquids, and diking with absorbent booms or other material.

9. During, and after the fire, trained personnel shall conduct air monitoring (from a safe distance and while wearing proper protective clothing) to identify hazardous vapor concentrations in the area. Off-site evacuation of the public should be considered by the Emergency Coordinator and local government officials (please refer to Section 7.4.3 Item 1).

10. After the fire is controlled and it is deemed safe to attempt, enter the affected building or area to assess damage and to determine the condition of hazardous waste containers, tanks, and other affected equipment. This action shall only be undertaken by trained personnel wearing proper protective gear and while under the protection of a charged hoseline.

11. Any leaking tanks, pipes, containers, or other equipment shall be plugged, patched off, off-loaded, or over packed (the latter applies to small containers and drums), as appropriate, to stop the release of liquid into the area. Contain any spilled wastes and segregate them from fire suppression runoff, if possible. Only trained and properly clothed personnel shall attempt these actions.

12. Pump large amounts of contained chemicals and runoff to drums or to tanks for disposal or, if applicable, on-site processing. Small quantities of chemicals and runoff can be absorbed and placed in drums for disposal. This action shall only be attempted by trained personnel wearing proper protective gear.

13. Clean all contaminated surfaces including tanks, containment structures, containers, and ancillary equipment. Cleanup personnel shall wear appropriate protective gear. See Attachment 6-1 for a copy of the Confined Space Entry Procedures.

14. Decontaminate all response personnel, equipment, protective gear, and apparatus. Wearing of appropriate protective gear is required during decontamination operations.

15. Prepare records and documentation regarding the incident for internal purposes.

7.4.4.3 Floods

None of the hazardous waste management activities are located within the 100-year floodplain. Therefore, floods exceeding this level will be dealt with on a case by case basis.

7.4.4.4 Explosions

1. Activate the alarm system to notify facility personnel about the emergency and evacuate the area, affected building or, if necessary, the entire facility.

2. If process equipment/systems are involved, shut them down if such action can be done without putting personnel at risk. Also ensure that the storm sewer cut-off sump has remained closed. The only time the storm sewer is open is during rainfall, after it has been manually opened for a storm.

3. Treat the injured, and summon emergency medical services (ambulance), if necessary, by dialing 911. If a spill or fire is associated with the explosion, please review Sections 7.4.4.1 (Spill Control) or 7.4.4.2 (Fire Control) above.

7.5 COORDINATION AGREEMENTS [OAC 3745-54-52(C) and OAC 3745-54-37]

Copies of the Contingency Plan have been furnished to the Hebron Police Department, Hebron Fire Department, and the Licking Memorial Hospital. All updates of the plan will be submitted to these entities and Ohio EPA. The Hebron Fire Department has been familiarized with the facility. In addition, Clean Harbors maintains a 24-hour emergency hotline, which will assist the facility if outside remediation response is needed.

The Emergency Coordinators have agreed, verbally, to provide emergency assistance as needed.

Clean Harbors has the equipment, personnel, and training on site to handle most spill events.

7.6 EVACUATION PLAN [OAC 3745-54-52(F)]

In an uncontrolled emergency (such as a large fire, an uncontrollable release, immanent danger to the personnel in the plant, etc.), all persons are to be evacuated from the area. The Clean Harbors facility is equipped with a plant-wide public address system with intercoms positioned throughout the facility. In addition, telephones are located throughout the plant, to be used not only for inner plant communications, but also for public address system access. The intercom in the office area is used to call the warehouse, still room, boiler room, cooker room, maintenance building, Truck Station No. 1, south tank farm and Truck Station No. 2. Personnel throughout the plant, including Container Storage areas No. 1 and 2 and Truck Stations 1 and 2,

will be able to hear the intercom announcements from the Truck Station No. 1 intercom, warehouse area intercom, and other intercoms. Each supervisor will count their people in the assembly area to be sure that all personnel are accounted for and out of the area.

Twenty-five exits are in the main building (includes office, boiler room, still room, cooker room and warehouse). Five exits are also in the maintenance building and six exits in each of the tanker loading facilities. Persons should exit at the most readily accessible door. Two roads, east and west of the main building, lead the evacuation to an assembly area.

The facility Evacuation Plan and location of intercoms are shown on Attachment 7-5 (Exhibit 5).

7.7 REQUIRED REPORTS [OAC 3745-54-56(J)]

Emergencies are recorded and maintained as part of the operating record. Spills or other incidents are recorded on an Incident Report Form shown in Attachment 7-3. Attachment 7-4 shows the DOT Hazardous Materials Incident Report. A spill, if of a minor controllable nature, will not necessarily require implementation of the Contingency Plan. The Emergency Coordinator will determine if the incident warrants implementation of the Contingency Plan (i.e., large spill or fire, uncontrolled emergency, etc., as specified throughout this document). Reports will be submitted as discussed in Section 7.4.3 and below.

Within 15 days a written report of the event shall be submitted to the Ohio EPA Director and copied to the Ohio EPA Central District Office, including:

- Name and phone number of reporters;
- Name, address and telephone number of owner or operator;
- Name, address and telephone number of facility;
- Date, time and type of incident;
- Name and quantity of materials involved;
- The extent of injuries or possible hazards to human health or environment outside of the facility;
- The estimated quantity and disposition of recovered hazardous material that resulted from incident; and
- Assessment of actual and potential hazards.

7.8 AMENDMENTS TO THE CONTINGENCY PLAN

The contingency plan will be reviewed (and promptly amended, if necessary) whenever:

- The applicable regulations are revised or required by the Director;
- The Plan fails in an emergency;
- The facility design, construction or operation changes significantly;
- The list of emergency personnel changes; or
- The inventory or location of emergency equipment changes.

Please Note: Pages of this application which contain facility staff personal/home phone number information has been removed from this web-available version of the document.

To review redacted copies of these removed pages, please contact DMWM's record management staff at (614) 644-2621. Thank you.

B. Emergency Notification Telephone Numbers

1. Clean Harbors Emergency Response (24 hour number) – Tel. (800) 645-8265
2. National Response Center - Tel. (800) 424-8802
3. Ohio EPA Emergency Response Office Tel. (800) 282-9378

C. Emergency Teams to be Notified for Assistance

1. Hebron Police Department
   116 W. Main
   Hebron, Ohio 43025
   Emergency 911
   Non-Emergency (740) 928-4326
2. Hebron Fire Department
   111 Basin Street
   Hebron, Ohio 43025
   Emergency 911
   Non-Emergency (740) 928-4721
3. Licking Memorial Hospital
   1320 West Main
   Newark, Ohio 43055
   Tel. (740) 344-0331

ATTACHMENT 7-2 EMERGENCY EQUIPMENT FOR THE EXISTING FACILITY			
Items	**Specifications**	**Capabilities**	**Location**
Fire Extinguishers	10 Lbs. CO2 15 Lbs. CO2 10 Lbs. Dry Chem. ABC 20 Lbs. Dry Chem. ABC 50 Lbs. Dry Chem. ABC 125 Lbs. Dry Chem. ABC 5 Lbs. Halon 9 Lbs. Halon 13 Lbs. Halon 17 Lbs. Halon	Universal System effective on paper, wood, electrical, tires, as well as solvent fires	Throughout the facility, see Exhibit 5.
Fire Extinguishers in Mobile Equipment	5 Lbs. Dry Chem. ABC 10 Lbs. Dry Chem. ABC 20 Lbs. Dry Chem. ABC	Universal System effective on paper, wood, electrical, tires, as well as solvent fires	Lift Trucks, Spill Truck, Vac Truck, Yard Truck, and Portable Welding Cart
Absorbent	3 inch Sorbent Pads and Booms; (2) skids of oil dry absorbent	Spill Control	Pads and Booms in Spill Boxes; Oil Dry : 1 Skid on east side of facility and 1 Skid on west side of facility
Miscellaneous Spill Control Equipment	Helmet w/Face Shield, Respirator Cartridges, Nylon Rope, Safety Manual, Muslin Sheet, Duct Tape, Red Strapping, Rakes, Long Handled Scraper, Mask Cartridge Filter, Cartridge Safety Mask, Tyvek Suits, Drum Lifter	Spill Control	Spill Boxes
Telephone System	Cell Phone Telephone with Intercom	External Communication	Throughout the facility, see Exhibit 5.
Intercom System	Telephone with Intercom Intercom/Alert Horn	P.A. system for emergency communication in the facility	Throughout the facility, see Exhibit 5.
Shovels, Brooms and Squeegees	Non-sparking shovels; standard commercial brooms and squeegees	Spreading and removal of absorbent (Spill) and decontamination	Spill Boxes and Warehouse

ATTACHMENT 7-2			
EMERGENCY EQUIPMENT FOR THE EXISTING FACILITY			
Items	**Specifications**	**Capabilities**	**Location**
Fire Alarm System (Sounded with Telephone/Intercom/Alert Systems)	Same as Intercom System	Alerts employees of fire	Throughout the facility, see Attachment 7-5 (Exhibit 5).
Sprinkler System	Water/Form System	Fire Control	Pump House; lab, still, cooker, foam, lab sample storage, and boiler rooms; loft (2E Mezzanine); Maintenance Building; Tanker Tunnel #1; Warehouse (Container Storage No. 2); and Container Storage Area No. 1.
Foam Water Cannons	(6) Hydrant Foam Monitors	Fire Control	Tank Farm No. 1, Tank Farm No. 2, Flammable inhibitor shed, Container Storage area No. 1
Water Cannons	(2) Hydrant - Water	Fire Control	South side of facility
Safety Equipment	Gloves, Goggles, Safety Glasses, Respirators (Full and Half-Face), Plastic Aprons and Boots	Personal Protection	Spill Boxes and Warehouse
Oxygen Unit	(2) S.O.S. Oxygen Bottles (103 Liters) (2) Zee Medical Bottles (1000 psi)	Emergency Respiration	(2) Supervisors Office (2) Maintenance Building
Locker	2 per employee	1 – Uniform 1 - Personal	Locker Room
Eye Wash Stands, Safety Showers, and Handsprays	(22) Safety Showers with Eye Wash (3) Handspray (3) Eye Wash Only (1) Eye Wash/Handspray	Showers – 30 gpm with minimum 30 psi meets all ANSI/OSHA standards. Eye Wash – Meets all ANSI/OSHA standards	Throughout the facility, see Exhibit 5.
First Aid Kit	(6) Industrial First Aid Kits	For treatment of Minor injuries	Office Building, Lunchroom, Supervisor's Office, Container Storage No. 2, Lab, and Maintenance
Self-Contained Breathing Apparatus (SCBA)	(6) MSA H-45	Personal Protection	(1) Supervisor's Office (2) Locker Room (3) In Process Area

ATTACHMENT 7-3

CLEAN HARBORS INCIDENT REPORT FORM

Incident : Incident

Form Code: 7

Incident Header	
Incident Number	
Incident Date	
Date Submitted	
Reported By Employee ID	
Signature	
Incident Location	
Incident State/Province	
Incident Severity	
Incident Owner Employee ID	
Short Description	
Compliance Incident	
Description	
Category Severity	
Release	
Description	
Description of material released	
Material reference documents (profile/shipping document)	
Volume of material released (specify units)	
Physical State	
Duration of Release (specify units)	
Did release escape containment	
Contingency Plan Activated	

Time of Release	
Release exceeded a reportable quantity?	
Explain immediate actions taken to control the release	
Immediate actions taken to address the release	
Weather conditions at time of release	
Reported to an Agency	
Agency Contact Infomration	
Additional comments/concerns	
Type Severity	
If outside containment, what was impacted?	
Internal/External Notifications	
Direct Manager notified	
If yes, to whom	
Transportation Compliance notified	
Trans Compliance Specialist notified	
24 hour Emergency Response Operator notified	
Response Team Activated	
if yes, identify response team	
If Internal Response Team, Identify Primary Contact	
If 3rd Party or Local Response Team, Identify	
Law Enforcement Notified	
If Yes, Identify Agency Notified	
If Yes, Enter Report Number Provided	
Fire/EMS Notified	
If Yes, Identify Agency Contacted	

If Yes, Enter Report Number Issued	
State Environmental Agency Notified	
If Yes, Identify Agency & Contact	
If Yes, Provide Report Number Assigned	
National Response Center/Transport Canada Contacted	
If Yes, Provide Report Number	
Customer material being transported	
If yes, identify customer	
If yes, customer notified	
Name and Contact Information of Customer	
Identify who contacted customer	
Time and date of notification	
Media Coverage	
If yes, identify media outlets	
Estimate Material Loss if Applicable	
Estimate Carrier Damage	
Estimate Property Damage	
Estimate Response Cost	
Estimate Remediation/Cleanup Cost	
Description of Event & Package Failure	
Corrective Action Plan	
Describe Recommendatins/Actions Taken to Prevent a Recurrence	
MTI Scheduled	
If yes, MTI team lead	
Date MTI Completed	
Recommended program changes and/or	

enhancements	
Employee Warning Notice Issued	
If Yes, Identify Action Taken	
Incident Footer	
Document Upload	
Images	

ATTACHMENT 7-4

DEPARTMENT OF TRANSPORTATION HAZARDOUS MATERIALS INCIDENT REPORT FORM

U.S. Department of Transportation
Pipeline and Hazardous Materials
Safety Administration

Hazardous Materials Incident Report

Form Approval OMB No. 2137-0039

According to the Paperwork Reduction Act of 1995, no persons are required to respond to a collection of information unless it displays a valid OMB control number. The valid OMB control number for this information collection is 2137-0039. The filling out of this information is mandatory and will take 96 minutes to complete.

INSTRUCTIONS: Submit this report to the Information Systems Manager, U.S. Department of Transportation, Pipeline and Hazardous Materials Safety Administration, Office of Hazardous Materials Safety, DHM-63, Washington, D.C. 20590-0001. If space provided for any item is inadequate, use a seperate sheet of paper, identifying the entry number being completed. Copies of this form and instructions can be obtained from the Office of Hazardous Materials Website at http://hazmat.dot.gov. If you have any questions, you can contact the Hazardous Materials Information Center at 1-800-HMR-4922 (1-800-467-4922) or online at http://hazmat.dot.gov.

PART I - REPORT TYPE

1. This is to report: ☐ **A)** A hazardous material incident ☐ **B)** An undeclared shipment with no release

☐ **C)** A specification cargo tank 1,000 gallons or greater containing any hazardous materials that (1) received structural damage to the lading retention system or damage that requires repair to a system intended to protect the lading retention system and (2) did not have a release.

2. Indicate whether this is: ☐ An initial report ☐ A supplemental (follow-up) report ☐ Additional Pages

PART II - GENERAL INCIDENT INFORMATION

3. Date of Incident: _____ **4.** Time of Incident (use 24-hour time): _____

5. Enter National Response Center Report Number (if applicable): _____

6. If you submitted a report to another Federal DOT agency, enter the agency and report number: _____

7. Location of Incident: City: _____ County: _____ State: _____ ZIP Code (if known): _____

Street Address/Mile Marker/Yardname/Airport/Body of Water/River Mile _____

8. Mode of Transportation ☐ Air ☐ Highway ☐ Rail ☐ Water

9. Transportation Phase ☐ In Transit ☐ Loading ☐ Unloading ☐ In Transit Storage

10. Carrier/Reporter
Name _____
Street _____
City _____ State _____ ZIP Code _____
Federal DOT ID Number _____ Hazmat Registration Number _____

11. Shipper/Offeror
Name _____
Street _____
City _____ State _____ ZIP Code _____
Waybill/Shipping Paper _____ Hazmat Registration Number _____

12. Origin (if different from shipper address)
Street _____
City _____ State _____ ZIP Code _____

13. Destination
Street _____
City _____ State _____ ZIP Code _____

14. Proper Shipping Name of Hazardous Material: _____

15. Technical/Trade Name: _____

16. Hazardous Class/ Division: _____

17. Identification Number: _____ (E.g. UN2764, NA 2020)

18. Packing Group: _____ (if applicable)

19. Quantity Released: _____ (Include Measurement Units)

20. Was the material shipped as a hazardous waste? ☐ Yes ☐ No If yes, provide the EPA Manifest Number: _____

21. Is this a Toxic by Inhalation (TIH) material? ☐ Yes ☐ No If yes, provide the Hazard Zone: _____

22. Was the material shipped under an Exemption, Approval, or Competent Authority Certificate? ☐ Yes ☐ No

If yes, provide the Exemption, Approval, or CA number: _____

23. Was this an undeclared hazardous materials shipment? ☐ Yes ☐ No

 Reproduction of this form is permitted

PART III - PACKAGING INFORMATION

24. Check Packaging Type (check only one - if more than one, list type of packaging, copy Part III, and complete for each type:

☐ Non-bulk ☐ IBC ☐ Cargo tank Motor Vehicle (CTMV) ☐ Tank Car

☐ Cylinder ☐ RAM ☐ Portable Tank ☐ Other _____

25. See instructions and enter the appropriate failure codes found at the end of the instructions. Be sure to enter the codes from the list that corresponds to the particular packaging type checked above. Enter the number of codes as appropriate to describe the incident. Enter the most important failure point in line 1. If there are more than two failure points, provide in this format in part VI.

1. What Failed: ____ ____ ____ How Failed: ____ ____ ____ Causes of Failure: ____ ____ ____

2. What Failed: ____ ____ ____ How Failed: ____ ____ ____ Causes of Failure: ____ ____ ____

26a. Provide the packaging identification markings, if available.

Identification Markings: _____

(Examples: 1A1/Y1.4/150/92/USA/RB/93/RL, UN31H1/Y0493/USA/M9339/10800/1200, DOT - 105A - 100W (RAIL), DOT 406 (HIGHWAY), DOT 51, DOT 3-A)

26b. For Non-bulk, IBC, or non-specification packaging, if identification markings are incomplete or unavailable, see instructions and complete the following:

Single Package or Outer Packaging:

Packaging Type: _____

Material of Construction: _____

Head Type (Drums only): ☐ Removable ☐ Non - Removable

Single Package or Inner Packaging (if any):

Packaging Type: _____

Material of Construction: _____

27. Describe the package capacity and the quantity:

Single Package or Outer Packaging:

Package Capacity: _____

Amount in Package: _____

Number in Shipment: _____

Number Failed: _____

Single Package or Inner Packaging (if any):

Package Capacity: _____

Amount in Package: _____

Number in Shipment: _____

Number Failed: _____

28. Provide packaging construction and test information, as appropriate:

Manufacturer: _____ Manufacture Date: _____

Serial Number: _____ Last Test Date: _____

Material of Construction: _____ (if Tank Car, CTMV, Portable Tank, or Cylinder)

Design Pressure: _____ (if Tank Car, CTMV, Portable Tank)

Shell Thickness: _____ (if Tank Car, CTMV, Portable Tank)

Head Thickness: _____ (if Tank Car, CTMV)

Service Pressure: _____ (if Cylinder)

If valve or device failed:

Type: _____ Manufacturer: _____ (if present and legible) Model: _____ (if present and legible)

29. If the packaging is for Radioactive Materials, complete the following:

Packaging Category: ☐ Type A ☐ Type B ☐ Type C ☐ Excepted ☐ Industrial

Packaging Certification: ☐ Self Certified ☐ U.S. Certification Certification Number _____

Nuclide(s) Present: _____ Transport Index: _____

Activity: _____ Critical Safety Index: _____

PART IV - CONSEQUENCES

30. Result of Incident (check all that apply): ☐ Spillage ☐ Fire ☐ Explosion ☐ Material Entered Waterway/Storm Sewer ☐ Vapor (Gas) Dispersion ☐ Environmental Damage ☐ No Release

31. Emergency Response : The following entities responded to the incident: (Check all that apply)

☐ Fire/EMS Report # _____ ☐ Police Report # _____ ☐ In-house cleanup ☐ Other Cleanup

32. Damages: Was the total damage cost more than $500? ☐ Yes ☐ No

If yes, enter the following information: If no, go to question 33.

Material Loss: $ _____ Carrier Damage: $ _____ Property Damage: $ _____ Response Cost: $ _____ Remediation/Cleanup Cost: $ _____

(See damage definitions in the instructions)

33a. Did the hazardous material cause or contribute to a human fatality? ☐ Yes ☐ No

If yes, enter the number of fatalities resulting from the hazardous material:

Fatalities: Employees _____ Responders _____ General Public _____

33b. Were there human fatalities that did not result from the hazardous material? ☐ Yes ☐ No If yes, how many? _____

34. Did the hazardous material cause or contribute to personal injury? ☐ Yes ☐ No

If yes, enter the number of injuries resulting from the hazardous material:

Hospitalized (Admitted Only): Employees _____ Responders _____ General Public _____

Non-Hospitalized: Employees _____ Responders _____ General Public _____

(e.g.: On site first aid or Emergency Room observation and release)

35. Did the hazardous material cause or contribute to an evacuation? ☐ Yes ☐ No

If yes, provide the following information:

Total number of general public evacuated _____ Total number of employees evacuated _____ Total Evacuated _____

Duration of the evacuation _____ (hours)

36. Was a major transportation artery or facility closed? ☐ Yes ☐ No If yes, how many? _____ (hours)

37. Was the material involved in a crash or derailment? ☐ Yes ☐ No

If yes, provide the following information: Estimated speed (mph): _____ Weather conditions: _____

Vehicle overturn? ☐ Yes ☐ No

Vehicle left roadway/track? ☐ Yes ☐ No

PART V - AIR INCIDENT INFORMATION (please refer to § 175.31 to report a discrepancy for air shipments)

38. Was the shipment on a passenger aircraft? ☐ Yes ☐ No

If yes, was it tendered as cargo, or as passenger baggage?

☐ Cargo ☐ Passenger baggage

39. Where did the incident occur (if unknown, check the appropriate box for the location where the incident was discovered)?

☐ Air carrier cargo facility ☐ Sort center ☐ Baggage area

☐ By surface to/from airport ☐ During flight ☐ During loading/unloading of aircraft

40. What phase(s) had the shipment already undergone prior to the incident? (Check all that apply)

☐ Shipment had not been transported ☐ Transported by air (first flight) ☐ Transport by air (subsequent flights)

☐ Initial transport by highway to cargo facility ☐ Transfer at sort center/cargo facility

PART VI - DESCRIPTION OF EVENTS & PACKAGE FAILURE

Describe the sequence of events that led to the incident and the actions taken at the time it was discovered. Describe the package failure, including the size and location of holes, cracks, etc. Photographs and diagrams should be submitted if needed for clarification. Estimate the duration of the release, if possible. Describe what was done to mitigate the effects of the release. Continue on additional sheets if necessary.

PART VII - RECOMMENDATIONS/ACTIONS TAKEN TO PREVENT RECURRENCE

Where you are able to do so, suggest or describe changes (such as additional training, use of better packaging, or improved operating procedures) to help prevent recurrence. Provide recommendations for improvement to hazardous materials transportation beyond the control of your individual company. Continue on additional sheets if necessary.

PART VIII- CONTACT INFORMATION

Contact's Name (Type or Print): _____ Telephone Number: ( ) _____

Contact's Title: _____ Fax Number: ( ) _____

Business Name and Address: _____ Hazmat Registration Number (if not already provided): _____

E-mail Address: _____ Date: _____

Preparer is: ☐ Carrier ☐ Shipper ☐ Facility ☐ Other _____

SUBMIT

ATTACHMENT 7-5

EXHIBIT 5 – SITE LAYOUT PLAN

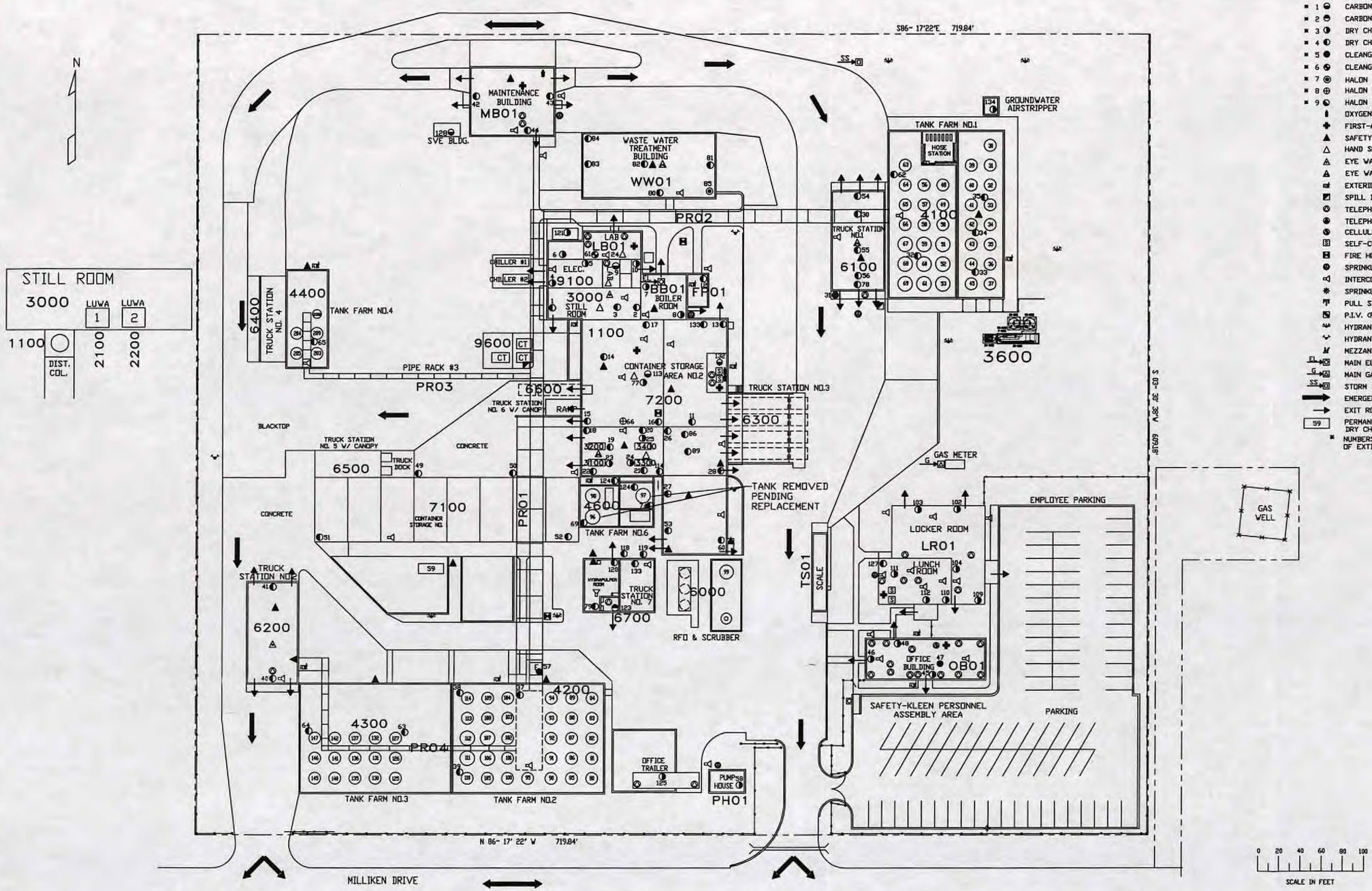

LEGEND

- * 1 CARBON DIOXIDE FIRE EXTINGUISHER - HAND HELD TYPE (10 # BC)
- * 2 CARBON DIOXIDE FIRE EXTINGUISHER - HAND HELD TYPE (15 # BC)
- * 3 DRY CHEMICAL FIRE EXTINGUISHER - HAND HELD TYPE (10 # ABC)
- * 4 DRY CHEMICAL FIRE EXTINGUISHER - HAND HELD TYPE (20 # ABC)
- * 5 CLEANGUARD FIRE EXTINGUISHER - HAND HELD (9.5 #)
- * 6 CLEANGUARD FIRE EXTINGUISHER - HAND HELD (4.75 #)
- * 7 HALON FIRE EXTINGUISHER (5 #)
- * 8 HALON FIRE EXTINGUISHER (9 #)
- * 9 HALON FIRE EXTINGUISHER (13 #)
- OXYGEN BOTTLE
- FIRST-AID KIT
- SAFETY SHOWER WITH EYE WASH FOUNTAIN
- HAND SPRAY ONLY
- EYE WASH WITH HAND SPRAY
- EYE WASH ONLY
- EXTERIOR HOSE BIBB
- SPILL BOX
- TELEPHONE
- TELEPHONE W/INTERCOM
- CELLULAR PHONE
- SELF-CONTAINED BREATHING APPARATUS (S.C.B.A.)
- FIRE HOSE
- SPRINKLER ALARM
- INTERCOM/ALERT (HORN)
- SPRINKLER RISER FOR A.F.F.F. (AQUEOUS FILM FORMING FOAM)
- PULL STATION
- P.I.V. (POST INDICATOR VALVE)
- HYDRANT - FOAM MONITOR
- HYDRANT - WATER
- MEZZANINE
- EL MAIN ELECTRIC SWITCH
- G MAIN GAS VALVE
- SS STORM SEWER CUTOFF
- EMERGENCY EVACUATION ROUTES
- EXIT ROUTES FOR BUILDINGS
- 59 PERMANENTLY INSTALLED 50# FIXED DRY CHEMICAL SYSTEM

* NUMBERS GIVEN NEXT TO EXTINGUISHERS ARE FOR MAINTENANCE REMOVAL AND RETURN OF EXTINGUISHERS LOCATED THROUGH-OUT SITE.

NOTES

PROCESS NUMBERING SYSTEM

1100	DISTILL. COLUMN NO.1
2100	LUWA NO. 1
2200	LUWA NO. 2
3000	STILL ROOM
3100	SAFETY-THERM NO. 1
3200	SAFETY-THERM NO. 2
3300	SAFETY-THERM NO. 3
3400	SAFETY-THERM NO. 4
3600	DEHYDRATION UNIT
4100	TANK FARM NO. 1
4200	TANK FARM NO. 2
4300	TANK FARM NO. 3
4400	TANK FARM NO. 4
4600	TANK FARM NO. 6
6100	TRUCK STATION NO. 1
6200	TRUCK STATION NO. 2
6300	TRUCK STATION NO. 3
6400	TRUCK STATION NO. 4
6500	TRUCK STATION NO. 5
6600	TRUCK STATION NO. 6
6700	TRUCK STATION NO. 7
7100	CONTAINER STORAGE AREA NO. 1
7200	CONTAINER STORAGE AREA NO. 2
9100	ELECTRICAL ROOM
9600	COOLING WATER

FACILITY SUPPORT UNIT/AREA LETTERING SYSTEM

BB01	BOILER BUILDING
FP01	FIRE PROTECTION BUILDING
LB01	LABORATORY BUILDING
LR01	LOCKER ROOM
MB01	MAINTENANCE BUILDING
OB01	OFFICE BUILDING
PH01	PUMP HOUSE
PR01	PIPERACK
PR02	PIPERACK
PR03	PIPERACK
PR04	PIPERACK
TS01	TRUCK SCALE
WW01	WASTE WATER TREATMENT BUILDING

ATTACHMENT 7-10

EXHIBIT NO. 5

NO.	DESCRIPTION	BY	CK	APPR	DATE
18	RCRA PERMIT RENEWAL UPDATES	KMC			04/09/15
17	RCRA PERMIT RENEWAL UPDATE	KMC			12/12/14
16	UPDATED FIRE EXTINGUISHERS	GK			03/31/06
15	ADDED EXT. No. 134	GK			11/30/05
14	ADDED S/S & EYEWASH T/T #2	GK			9/15/00
13	RFO, HYDRAP. & TRAILER MOD'S	GK			3/28/00
12	ADDED EXT. No. 133	GK			5/24/99
11	ADDED EXT. No. 132	GK			5/7/99
10	ADD EXT.#128	GK			2/11/99
9	ADD EXT.#127	GK			12/1/98
8	ADD PAGING SPKRS & EXT.#126	GK			5/12/98
7	OFFICE TRLR & PHONE MOD'S	GK			11/7/97
6	ADDED 5 EXTINGUISHERS	GK			8/3/96

REVISIONS

EXISTING FACILITY TRAFFIC FLOW, EMERGENCY EQUIPMENT LOCATIONS AND EVACUATION ROUTES

CleanHarbors

581 MILLIKEN DRIVE, HEBRON, OHIO 43025 PHONE (740) 929-3532

SCALE	DRAWN	CHECKED	PROJ. ENG. APPR.	OPERATION APPR.	DATE
1"=40'	RDK	KJM			10/18/94

HEBRON, OH RECYCLE CENTER

DRAWING NO. 90-64200-004 REV 18

THIS DRAWING CONTAINS INFORMATION PROPRIETARY TO CLEAN HARBORS ANY REPRODUCTIONS, DISCLOSURE OR USE OF THIS DRAWING IS EXPRESSLY PROHIBITED EXCEPT BY CLEAN HARBORS OR AS CLEAN HARBORS MAY AGREE IN WRITTING.

8

SECTION 8

TRAINING PROGRAMS

The information contained in this section outlines the personnel training program for Clean Harbors's hazardous waste facility as required by OAC 3745-54-16 and 3745-50-44(A)(12). This plan describes the training program as it applies to the existing facility. As the facility updates and expands, the program will be expanded, if necessary, to encompass these changes.

8.1 OUTLINE OF THE TRAINING PROGRAM [OAC 3745-54-16(A)(1) and 3745-50-44(A)(12)]

Employees are trained in general safe work practices and given specific instructions with respect to hazards unique to the employee's job assignment. Employees receive both on-the-job and classroom training. Job descriptions are contained in Attachment 8-1.

8.1.1 Introductory Training Program

New employees will receive training within six months. The program developed at Clean Harbors for the training of their employees in the safe handling of hazardous wastes is administered by Clean Harbors Health and Safety Manager and/or Environmental Compliance Manager. The instruction is combined classroom and on-the-job training.

The training program includes instruction that teaches facility personnel hazardous waste management procedures. Personnel are instructed on general first aid and procedures for handling products and waste. Personnel receive on-the-job training concerning the process equipment.

The Facility Manager is kept informed of current regulations by the Clean Harbors Environmental, Health and Safety Department and/or Environmental Compliance Manager. Applicable regulatory information on hazardous waste handling, processing and storage is explained to personnel. Personnel are to be informed of safe operating and correct procedures before handling hazardous materials and wastes.

Personnel are to be made aware of the hazards associated with each waste (i.e., ignitable, toxicity, etc.) and taught proper responses to spills, fires, or accidents. All personnel are instructed on inspection procedures, required record keeping (waste tracking, manifests, inspections) required reports (annual, discharges, fires and explosions) and manifesting, prepackaging and labeling, to the extent that it is applicable to their position.

The initial 24-hour classroom training requires demonstrated understanding of the Contingency Plan, the Clean Harbors Recycle Operations Procedures, inspection procedures, waste analysis, and key sections of federal and state regulations that discuss treatment, storage, and disposal facility requirements (40 CFR 264). The areas addressed in the review of state and federal regulations include the RCRA requirements for a waste analysis plan, inspection plan, security, personnel training, ignitable waste, preparedness and prevention, contingency plans, manifesting, facility operating record, container management, tank management and closure and financial requirements. A list of the classroom topics can be found in Attachment 8-2.

All readings are reviewed with the instructor to ensure understanding. The instructor questions trainees for satisfactory comprehension. The trainees are also given a test at the end of each section which is reviewed to show competency with the material.

Some of the topics in which personnel are instructed in the classroom and on-the-job training include:

- Right to Know;
- Use of Safety Data Sheet;
- First Aid;
- Safe Operating Procedures;
- Read and review Federal/State Regulations;
- Emergency procedures and reporting requirements;
- Using, inspecting, repairing, and maintaining emergency and monitoring equipment;
- Key parameters for feed shut-off, facility valving, and segregation of tanks;
- Communication and alarm systems;
- Response to groundwater contamination incidents;
- Response to fires, spills, or explosions;
- Shutdown of operations;
- Normal operating responsibilities;
- Accident prevention; and
- Respiratory protection.

All employees working with hazardous waste, at the Hebron facility receive this 24 hours of classroom training addressing the Hazard Communication Program, general safety, respiratory protection, personal protective equipment (PPE), the Contingency Plan, and emergency procedures.

All employees also receive on-the-job training by the Shift Supervisor and/or a lead person. The training includes; normal operating responsibilities (e.g., start-up and shut-down), safe operation of equipment, , emergency shut-down of equipment, fork lift operation, correct procedures for handling hazardous materials (e.g., PPE). A new employee or any employee who is transferred or promoted to a new position will work with a lead person for two to four weeks for training on the process equipment, record keeping, housekeeping standards, and to meet all specification and all regulatory compliances. The employee will not work in an unsupervised position until he has completed the training requirements of OAC Rule 3745-54-16(A).

All employees attend right-to-know training sessions and personnel with emergency response responsibilities receive training in confined space entry.

Employees have available a chemical description and a Safety Data Sheet for the products they are handling. The information on these sheets is also necessary in the case of a spill or an emergency.

The solvent groups in the Clean Harbors Hebron system are Dry Cleaning Wastes and industrial solvents that include the material listed by US EPA as F001, F002, F003, F004, and F005 as well as other waste codes. Also included will be various off-spec chemicals and

chemical intermediates defined by EPA codes K and U and wastes exhibiting a D-characteristic.. For a complete description of the wastes managed at the facility refer to Section 3.1 of this permit application.

8.1.2 Continuing Training Program

All facility personnel take part in annual refresher training, in accordance with OAC Rule 3745-54-16(C). This annual review is a minimum of 8 hours of training and covers contingency plan implementation training which includes procedures for using, inspecting, repairing and replacing facility emergency and monitoring equipment; communications and alarm systems; responses to fire or explosions; response to groundwater contamination incidents (spill control); and shutdown of facility operations. In addition, all employees also receive classroom instruction on employee hazard communication, Safety Data Sheet review, new or revised Health and Safety Procedures, use of personal protective equipment, respirator use and fit testing, material handling and processing procedures, and proper container management practices.

It is an established company practice that at every Clean Harbors facility, training sessions are organized throughout the year, separate from the training required by the RCRA permit. During these special training sessions a variety of topics, related to environmental and health and safety issues, are discussed, including the proper use of a SCBA, spill management and response, proper use of fire extinguishers, how to use an eyewash, and First Aid training.

All employees receive training in topics from the Standard Operating Procedures that are specific to the employee's job. These training topics are developed by the Hebron operations group with assistance from the Clean Harbors Compliance and Health, & Safety Departments if needed, and are conducted separately for Operations, Maintenance, and Laboratory personnel by the supervisors or representative of each group.

Mock drills may be utilized for demonstration purposes. Hands on experience with these types of situations are always utilized.

Continuing training will also be provided for employees who are transferred or promoted to a new position in the facility. Any employee who is transferred or promoted to a new position in the facility will work with a lead person for two to four weeks for training. Such employees will not work in unsupervised positions until they have completed the training requirements of OAC Rule 3745-54-16(B). All training will be completed within six months of initial hire date or, if a person is transferred to a new position, within six months of that transfer.

In addition to the initial training and continuing training that all personnel at the Hebron facility receive, some personnel, on a voluntary basis, may elect to receive additional training. This training is not required in order for a person to complete their routine duties, but is offered instead to any employee desiring to further enhance their required training. Currently, any employee may elect to receive confined space training and/or additional emergency response training beyond the required 24 hour program. Typically, advanced training includes the pursuit of vocational or other college degrees.

Records documenting the type and amount of training received for each employee are kept until closure, or three years after employee termination.

8.2 HEALTH AND SAFETY/ENVIRONMENTAL MANAGERS [OAC 3745-54-16(A)(2)]

The Environmental Compliance Manager and/or the Health and Safety Manager as well as the General Manager are responsible for overseeing the training program at the Hebron facility. These individuals have received training in a wide variety of subject matters, and in all cases have received a level of training as advanced as or more advanced than the level of training they provide to others. The qualifications for these managers are included in Attachment 8-1.

8.3 RELEVANCE OF TRAINING TO JOB POSITION [OAC 3745-54-16(A)(2)]

As outlined in section 8.1.1 and 8.1.2, all personnel receive the same training covering hazardous waste management procedures. This training includes contingency plan implementation, inspection procedures, manifesting, record keeping, packaging and labeling requirements. Additional training that all employees receive during the introductory training program and then during the continuing training program is detailed in sections 8.1.1 and 8.1.2 respectively.

Certain personnel receive additional training relative to their job function. For example, a warehouse person will receive training on the safe operation of a forklift and a distillation column operator will receive training on the proper operation of a distillation column. This type of training is typically done on-the-job under supervision. No description of college degree requirements indicates a high school diploma or equivalent. Also, specification of degree requirements are only a recommendation and not a condition of employment or permit requirement. Work or training experience may be substituted for a degree.

8.4 TRAINING OF EMERGENCY RESPONSE (OAC 3745-54-16(A)(3)]

The training program is designed to ensure that facility personnel are able to handle hazardous waste in a safe manner and are also properly trained to respond effectively to emergency situations. The program trains all personnel to maintain compliance under both normal operating and emergency conditions. The program emphasizes the equipment, systems, and procedures to be utilized on-site prior to the arrival of outside emergency response agencies.

This training includes non-routine and emergency situations such as:

- Emergency procedures;
- Using, inspecting, repairing, and maintaining emergency and monitoring equipment;
- Key parameters for feed shut-off, facility valving and segregation of tanks;
- Communication and alarm systems;
- Response to groundwater contamination incidents;
- Response to fires, spills or explosions;
- Shutdown of operations;
- Normal operating responsibilities;
- Accident prevention; and
- Respiratory protection.

This training is conducted as a combination of classroom and hands-on training. The initial training is conducted prior to the employee being permitted to work unsupervised. Refresher training is conducted throughout the year with an 8 hour HAZWOPER refresher.

Should the employee demonstrate a lack of understanding during the classroom training, to the on-the-job trainer or after initial training, through questionable actions or reactions to a situation, the employee will be trained further until a competent level of understanding is demonstrated.

8.5 IMPLEMENTATION OF TRAINING PROGRAM (OAC 3745-54-16(B), (D)(4), and (E)]

All facility personnel have been fully trained at the time of this submittal. All new personnel will complete this training program within six months of their date of employment. No employee hired to work at this facility will work unsupervised prior to completion of the training program.

The Health and Safety/Environmental Compliance Managers as well as the General Manager conduct reviews of all training and any instructions given in any new procedure. This review is used as a planning mechanism for future training.

Records documenting the job title for each position, job descriptions, names of employees and completed training programs (both introductory and review) are kept for each employee at the facility. The facility uses an electronic system to track employee training and a copy of the sign-in sheets for the training are put in the employee training file as a backup. These records will be kept until closure of the facility for current employees and for three years from the date of the individual employee's termination for former employees. A training matrix for the facility has been included as Attachment 8-3.

Attachment 8-1

Job Descriptions

Date: December 19, 2014
Revision No.: 0

FACILITY GENERAL MANAGER

SCOPE:

Directs the facility to achieve established goals; participates in establishing goals; responsible for facility performance.

SKILLS:

Experienced manager who can establish through leadership the standards for the facility. Should have BS in Chemical Engineering or Mechanical Engineering or equivalent experience.

RESPONSIBILITIES:

Establish safety attitudes throughout the facility by inspections, reviews, audits and investigations.

Ensure that the facility complies with all regulatory rules and that a commitment of timely training is maintained.

Build a team of people to achieve results showing trends of improvement.

To ensure that processes handle company products in a safe, timely and efficient manner.

Trouble shoot all problem areas.

Make appropriate and timely decisions.

Planning activities to overcome potential problems.

Assign priorities to develop and improve operational processes.

Build good team spirit and a system for discipline.

Communicate plans and needs so as to avoid union-type activities.

Establish budgets, cost controls and appropriate reviews and action plans.

Communicate with EPA and regulatory bodies, as well as local fire and police departments.

Select, hire, and develop employees.

Control plant image, i.e.; communication with outside bodies.

Develop team to improve productivity with short and long term goals.

Establish preventive maintenance and excellent housekeeping programs.

Appoint a deputy in any time of absence so that the experience is shared by immediate developing staff.

Date: December 19, 2014
Revision No.: 0

OPERATIONS MANAGER

SCOPE:

Efficiently coordinate all day-to-day production activities to meet plant and corporate goals while ensuring safe and environmentally sound procedures are strictly adhered to. Is regarded as number two position on site and acts in absence of Facility General Manager.

SKILLS:

Strong, people oriented manager with ability to plan, decide and act to overcome potential problems in a prudent manner. A B.S. in Chemical Engineering and other technical background is preferred or equivalent experience.

RESPONSIBILITIES:

In charge of day to day facility operations. Develop people/equipment to increase productivity, fostering a sense of urgency in getting things done.

Coordinate shift schedule planning including time off for vacations or sickness in a financially sound and fair manner.

Manage lost time/recordable accidents by directing with safety high in priority.

Ensure EPA/OSHA permit standards are upheld.

Ensure all workers are properly trained on RCRA and their job responsibilities.

Plan production schedule.

Ensures Facility complies with all Regulations and Rules.

Ensure process equipment is kept running and products are within specifications.

Calculate production through-put on a daily basis and copy the Facility Manager.

Monitor and record the facility equipment usage and copy the Facility Manager.

Maintain an updated inventory system daily.

Date: December 19, 2014
Revision No.: 0

HEALTH AND SAFETY MANAGER

SCOPE:

Coordinates Health & Safety (HS) programs with R/C Operations, recommending policy and procedures to assist line managers to achieve HS objectives and goals, corporate division or site specific, provide advice, consultation, guide emergency response and training, audit compliance with policies, special and non-engineering assignments, reviews or investigates recommendations, etc., controls utility systems within R/C Operations, recommends action plans.

SKILLS:

Experienced Chemical Engineer or equivalent experience with extensive exposure to operational safety, organization and management. Liaison ability with other groups.

RESPONSIBILITIES:

Special assignments from Director Environmental, Health, & Safety Recycle Centers such as organizational training, development, presentations, etc., both inside and outside R/C Operations.

HS role in R/C Operations - responsible for day to day administration of R/C program, issue of approved program and maintenance of program activity.

Acts as advisor/consultant to line management on HS matters.

Act as a leader, where appropriate, to ensure that utility affairs within R/C operational areas are controlled and approved.

Coordinate Recycle Laboratory activities with the Corporate laboratory, ensuring appropriate action plans are approved to resolve issues or conflicts.

Date: December 19, 2014
Revision No.: 0

LABORATORY MANAGER

SCOPE:

Responsible for ensuring incoming, in process and final quality control of all samples and processes; improve and update all technical and laboratory activities.

SKILLS:

Experienced, capable person with B.S. in Chemistry or equivalent experience and significant exposure to laboratory procedures.

RESPONSIBILITIES:

Train and implement laboratory safety standards.

Train and supervise laboratory and production personnel in laboratory procedures.

Test, approve and complete inbound, in process and outbound sample analyses.

Develop standard operating procedures for all laboratory equipment.

Develop QA/QC programs and procedures using corporate guidelines.

Develop laboratory procedures and scheduling to maintain optimum work flow.

Maintain analysis records.

Oversee boiler, cooling tower and all process equipment testing procedures and results.

Recommend new equipment and technical improvements.

Interact with off-plant CH personnel to insure correct interpretation of lab analyses.

Oversee initiation of purchase orders for laboratory equipment and supplies in accordance with the facility budget.

Establish pre-shipment testing procedures.

Maintain sample request records.

Process sample requests in an efficient, safe manner.

Initiate purchase orders for laboratory equipment and supplies through the purchase order program and in accordance with the facility budget.

Maintain laboratory housekeeping standards.

Date: December 19, 2014
Revision No.: 0

LABORATORY CHEMIST

SCOPE:

Responsible for supervision of and participation in all laboratory functions.

SKILLS:

B.S. Chemistry or other science field/equivalent experience. Experience in an industrial type laboratory is preferred.

RESPONSIBILITIES:

Assure safe lab practices in accordance with all established Clean Harbors safety procedures. Conduct weekly safety meetings in the lab as assigned.

Assure all lab analyses are in accordance with Clean Harbors Standard Operating Procedures and good lab practice so that all generated lab data is "defensible data".

Promote positive attitude, team spirit, and the "Do It Right" commitment at all times in completing work assignments and towards co-employees.

Perform testing and approve inbound, in-process, and outbound sample analysis. Be capable of also performing assigned analysis on prequalification samples as required.

Assist production personnel with in-process work and analysis as required.

Perform non-routine lab analysis as required.

Test and complete pre-shipment qualification analysis of finished product.

Review and verify completed lab analyses including proper disposition of waste streams. Communicate proper processing instructions to production personnel based upon lab results.

Responsible for supervision of laboratory technicians and productive output of the shift. Complete performance appraisals for subordinates as assigned.

Maintain laboratory housekeeping per the Clean Harbors standard.

Set high standards of laboratory knowledge and performance. Must be available as a resource to train and guide other laboratory and facility staff.

Assume backup responsibility for the Laboratory Manager during vacations, regulatory visits, etc. Capable of well representing the laboratory, facility, and the company in written and verbal communication internally and with external contacts.

Other duties as assigned by the Lab Manager or Facility Manager.

Date: December 19, 2014
Revision No.: 0

PLANT ENGINEER

SCOPE:

Coordinates all engineering activities on site, supervises maintenance so that plant and corporate goals can be achieved in a safe and timely manner.

SKILLS:

Experienced Engineer with B.S. in Engineering or Chemical Engineering. Is accountable and responsible for the facility engineering and maintenance functions.

RESPONSIBILITIES:

Ensures engineering work on time, within budget, by establishing critical path and timely audits.

Reviews facility engineering designs and approves construction in professional manner.

Supervises (leads and manages) maintenance operations.

Supervises utility operations and budget needs, establishing controls at branches, efficient operations.

Responsible for the boiler operation and all utility supplies, such as compressors and electrical switch rooms.

Responsible for fire systems hydrants sprinklers.

Winterization of facility in a timely manner.

Selection and supervision of contractors for plant engineering projects.

Preparation of plant AFE's and controlling the projects' progress and completion.

Assist production, help to overcome engineering type problems on site, recommend improvements on machines or processes.

Maintaining safety and good housekeeping within the area of responsibility.

Work with Corporate Engineering to develop scopes on corporate projects to meet plant needs.

Other work as assigned.

Date: December 19, 2014
Revision No.: 0

MAINTENANCE SUPERVISOR

SCOPE:

Complete facility maintenance activities and housekeeping in a safe and timely manner.

SKILLS:

Experienced, prudent person; usually will have served apprenticeship to develop special mechanical skills. Normally with more than ten years experience.

RESPONSIBILITIES:

Directs and monitors maintenance operations and personnel.

Maintain, clean and repair boilers and process equipment.

Install and repair process piping.

Advise plant personnel on maintenance/equipment related concerns.

Perform miscellaneous maintenance on instrumentation.

Initiate purchase orders for maintenance equipment and supplies through the purchase order program with the facility budget in mind.

Maintains proper spare parts inventory.

Monitor maintenance activities.

Operate all maintenance equipment.

Develop preventive maintenance programs throughout the facility.

Maintain housekeeping standard at all times during maintenance repairs and in maintenance work areas.

Date: December 19, 2014
Revision No.: 0

FACILITY OPERATIONS SUPERVIOR/SHIFT SUPERVISOR

SCOPE:

Responsible for the efficient operation of the shift resources available to this position.

SKILLS:

Strong, people oriented manager with ability to plan, decide and act to overcome potential problems in a prudent manner. A B.S. in a technical background is preferred, equivalent experience is required.

RESPONSIBILITIES:

Direct and monitor the total production activities and correct the operation or process equipment as appropriate.

Direct loading, unloading, inspection, weighting, spotting and sampling inbound and outbound trucks.

Check, approve and complete inbound and outbound paperwork.

Direct transferring of solvents throughout the plant.

Maintain production records.

Direct operation of forklifts and ensure appropriate maintenance in completed.

Supervise daily tank inventory recordings and calculations.

Direct activities for the preparation and drumming of specialty blends.

Maintain housekeeping standards.

Training new and present employees, keeping accurate absenteeism records and discipline records.

Develop new programs.

Approve/schedule in-bound and out-bound loads.

Supervise and organize a shift team to achieve agreed objectives.

Ensure safety procedures and rules are strictly adhered to.

Date: December 19, 2014
Revision No.: 0

MECHANIC

SCOPE:

Complete facility maintenance activities and housekeeping in a safe and timely manner.

SKILLS:

Experienced, prudent person; usually will have served apprenticeship to develop special mechanical skills. Normally with more than seven years experience.

RESPONSIBILITIES:

Maintain, clean, and repair boilers and process equipment.

Install and repair process piping.

Advise plant personnel on maintenance/equipment related concerns.

Perform miscellaneous maintenance on instrumentation.

Initiate purchase orders for maintenance equipment and supplies through the purchase order program with the facility budget in mind.

Maintains proper spare parts inventory.

Monitor maintenance activities.

Operate all maintenance programs throughout the facility.

Repair and install process pumps.

Repair and install process equipment.

Install and repair tank level system.

Install and repair pneumatic instrumentation.

Operate and service forklifts.

Receive, inspect, store and document all inbound materials.

Monitor oil levels on pumps and service equipment on a timely basis.

Change oil on process equipment on a routine basis.

Maintain housekeeping standards.

Date: December 19, 2014
Revision No.: 0

CHEMICAL OPERATOR

SCOPE:

Responsible for performing duties as an operator, in addition, accepting further responsibility for overall plant operations and programs, including acting as alternate to supervisor.

SKILLS:

Trained, experienced person with ability to represent correct point of view, self-starter with good work habits and good communication skills, in addition to operations exposure.

RESPONSIBILITIES:

Operate and monitor process equipment such as thin film evaporator pot still, molecular sieve, resin bed dryer, fractionating column, rotary vacuum dryer, etc., with minimal supervision.

Assist shift supervisor in directing workflow for the shift.

Develop understanding of equipment required to trouble-shoot operations problems, determine limitations of equipment and spot maintenance concerns.

Employ good work habits including communication with shift supervisor and peers, and attendance.

Operate equipment at maximum through-put with relative ease.

Participate in training new employees during on-the-job section of training.

Develop new programs to increase effectiveness of shift housekeeping and safety.

Develop plant operations knowledge in order to act as alternate to supervisor in cases of emergency.

Maintain housekeeping standards, operate plant in a safe manner, observe all safety rules and regulations.

Monitor boiler and air compressor units.

Transfer solvents throughout the plant.

Operate forklift safely.

Maintain production records including tank inventory recordings and calculations.

Check, approve and complete inbound and outbound paperwork. Handle loading, unloading, inspection, weighing, spotting and sampling inbound and outbound trucks.

Assist in the preparation and drumming of specialty blends.

Date: December 19, 2014
Revision No.: 0

LAB TECHNICIAN

SCOPE:

Responsible for performing laboratory analyses and accurate completion of paperwork. Must be capable of working independently with minimal supervision.

SKILLS:

Trained, experienced person with considerable technical knowledge and aptitude. Previous lab experience preferred.

RESPONSIBILITIES:

Perform job duties using safe lab practices in accordance with all established Clean Harbors safety procedures and rules including the Chemical Hygiene Plan.

Perform all lab analyses in accordance with Clean Harbors Laboratory Standard Operating Procedures and good lab practice so that all generated lab data is "defensible data".

Promote positive attitude, team spirit, and the "Do It Right" commitment at all times in completing work assignments and towards co-employees.

Perform testing and approve inbound, in-process, and outbound sample analysis. Be capable of also performing assigned analyses on prequalification samples as required.

Perform tank analyses and instruct production personnel on proper blending to meet appropriate specification.

Test and complete pre-shipment product qualification analysis of finished product.

Develop batch sheets using product inventory per specification.

Assemble and review paperwork on incoming lab samples and composite samples as required.

Maintain laboratory housekeeping per the Clean Harbors standard.

Have a basic knowledge and understanding of the operation and trouble shooting of CH laboratory instrumentation.

Other laboratory duties as assigned.

Date: December 19, 2014
Revision No.: 0

WAREHOUSEMAN

SCOPE:

Coordinate all inbound and outbound drum and warehouse activities.

SKILLS:

Trained person knowledgeable in regulatory procedures, preferably High School Diploma.

RESPONSIBILITIES:

Load finished product drums and complete required paperwork.

Unload waste drums and complete required paperwork.

Sample all inbound drums and complete corresponding paperwork.

Store drums in designated areas according to lab analysis.

Perform drum pumping operations.

Prepare drums for disposal.

Monitor drum activities.

Obtain drum storage inventory readings.

Maintain an organized warehouse with clearly identified rows.

Maintain a turn around system of drum processing in strict order of receipt as much as possible.

Maintain preventive maintenance checks on warehouse equipment such as the vac truck and drum room forklift.

Maintain housekeeping standards.

Pump contained areas as directed by Shift Supervisor.

Comply with safety rules and regulations.

Date: December 19, 2014
Revision No.: 0

MATERIAL HANDLER

SCOPE:

Responsible for performing in-bound and out-bound bulk and drum warehouse activities and transfer activities of material throughout the facility.

SKILLS:

Self starter and considerable aptitude, including some mechanical ability, preferably High School Diploma.

RESPONSIBILITIES:

Handle all in-bound traffic concerns including loading, unloading, inspection, weighing, spotting and sampling all trucks.

Receive all drum waste including checking labels, sampling, checking, approving and completing paperwork and updating drum receipt log book.

Pump drums to process holding tanks.

Ensure drums for clean product are inspected, labeled and filled properly.

Operate a forklift, safely.

Sample for lab approval.

Create special blends per batch instructions.

Transfer solvents throughout the plant.

Maintain housekeeping standards (including grounds maintenance and janitorial duties, if necessary.)

Maintain and update in the logbooks all transfers.

Operate in safe manner at all times.

Date: December 19, 2014
Revision No.: 0

ENVIRONMENTAL COMPLIANCE MANAGER

SCOPE:

Directs facility in achieving all environmental permitting. Aids in the facility's compliance activities.

SKILLS:

BS/BA in Environmental, Chemical or Civil Engineering or related science, or equivalent experience. Five or more years of experience including environmental regulatory compliance and permitting. Knowledge of RCRA and Clean Air Act required.

RESPONSIBILITIES:

All environmental permitting, including modification of Part B permit, air permits and wastewater permits.

Work closely with facility personnel, corporate engineering and operations to maintain compliance.

Develop a teamwork approach towards facility compliance.

Develop programs, as needed, to aid in the assurance of compliance at the assigned facility.

Troubleshoot problem areas.

Work with EHS Department, and other Departments in the company, to develop compliance programs, and/or new marketing ideas to the extent that it relates to compliance issues.

Aid in the enhanced development of customer relations in terms of compliance issues.

Conduct audits of company facilities and external facilities as used by the company.

Aid in the promotion of the company's image to the public. Includes community planning and community relations.

Continue professional growth in a manner that benefits the goals of the company.

Date: December 19, 2014
Revision No.: 0

RECEIVING COORDINATOR

SCOPE:

Responsible for inspecting and correcting incoming manifest and attached paperwork. Balancing quantities on manifest to inventory order documents, working with General Manager, Operations Manager, Operations Supervisor and Environmental Complaince Manager on inventory and production records.

SKILLS:

Strong organizational abilities, self-starter, data entry, computer knowledge, able to communicate and mesh with other personnel and company locations.

RESPONSIBILITIES:

Responsible for inspecting manifests and attached paperwork. Balancing quantities on manifests to inventory order documents.

Responsible for incoming inventory order document entries and balancing.

Responsible for balancing warehouse logs to inventory.

Data entry for production of inventory, working with General Manager, Operations Manager, and Operations Supervisor to balance Month-End inventory.

Miscellaneous data entry.

Filing all finished paperwork.

Responsible for coordinating lab analyses and manifests.

Responsible for maintaining preship and notification files.

Other duties as assigned.

Hebron Recycle Center Organization Chart

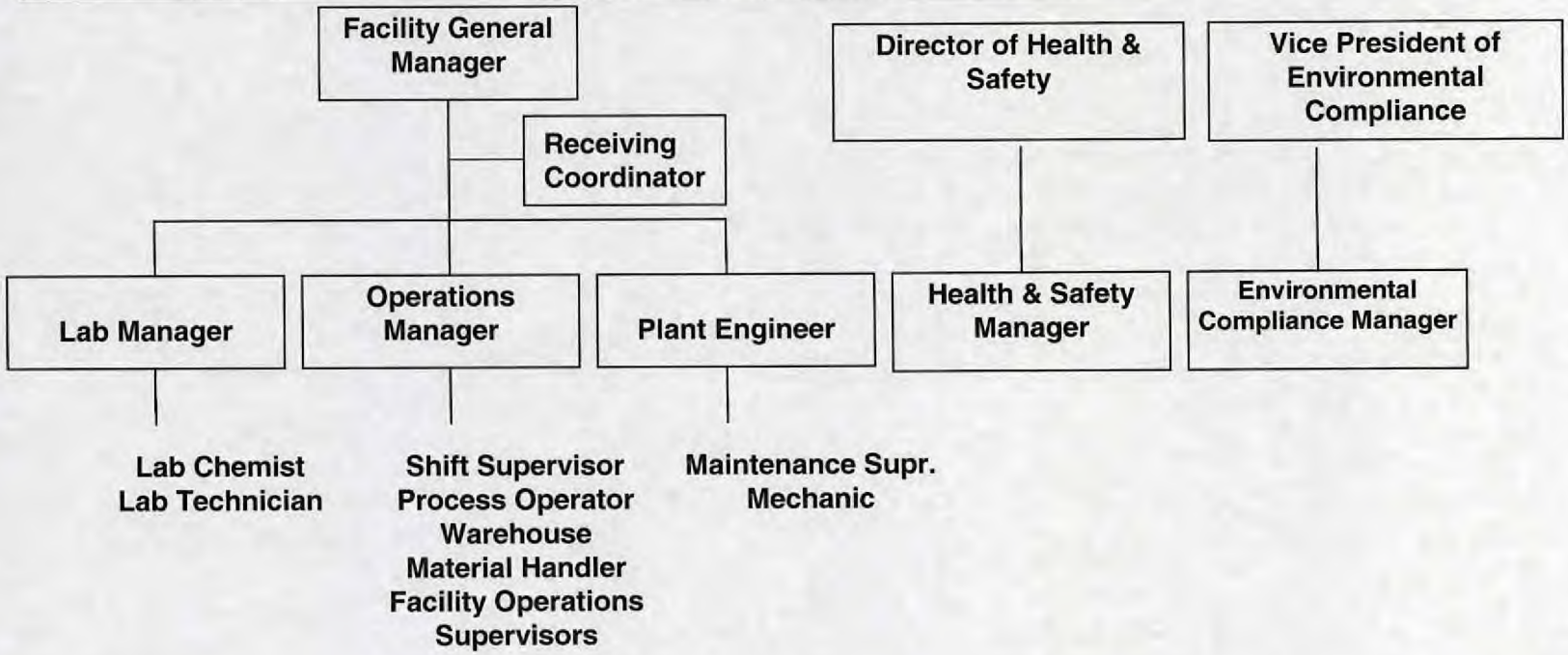

Attachment 8-2

Training Content, Frequency, and Techniques

The personnel training program is organized into specific training modules. Provisions have been made to review and update the program as necessary to maintain compliance with the terms of the RCRA permit. Each employee is provided copies of the appropriate training material. A complete copy of this training program is maintained at the facility and is available to OEPA and U.S. EPA officials for review.

The objectives of the training program are to provide general information about the company and the business and to provide specialized training relating to each specific job function. It is not the purpose of this training program in and of itself to provide employees with all of the basic knowledge to perform the duties of their position. However, as part of the evaluation process of the training program, an employee's deficiencies in basic knowledge will be detected and remedied.

Training Content

During the training program, employees are instructed in subject areas which pertain to their specific job functions. These subject areas may include: 1) the hazardous nature of chemicals and wastes; 2) the purpose of RCRA and the importance of maintaining compliance; 3) the proper handling, transport, and storage of wastes; and 4) the emergency procedures and contingency plan. The training program is intended to complement an employee's basic knowledge by providing facility specific information.

Prior to employment in an area relative to the management of hazardous waste, each potential applicant shall be screened for the ability to safely and adequately perform tasks and responsibilities associated with the specific position under consideration. Facility job descriptions shall be used to evaluate prospective employees for possession of the qualifications and skills necessary for the position.

The training program consists of several different modules. Each employee will receive training according to one or more modules as is appropriate for his or her particular position.

The following outlines the training modules and personnel receiving training in each module:

Module I. Employee Orientation (All Employees)

Employee orientation serves as an introduction to the facility. Material covered relates to company policies, organization, and operations. Specific information covered includes:

I. Orientation Packet
   - A. Welcome letter
   - B. Facility organizational chart
   - C. Insurance information
   - D. Company policies
   - E. Personal job description
   - F. Function of each job title
   - G. Training Matrix

II. Overview of Operations

A. Welcome

B. Company history/philosophy

C. Purpose of Clean Harbors

D. Departments and their functions

E. Personnel policies

Module II. Basic Emergency Procedures (Administrative Processing Personnel)

I. Emergency Response and Contingency Plan

A. Overview of Contingency Plan

B. Evacuation procedures

C. Emergency Alarms and Notification

D. Duties as directed by the Emergency Coordinator (i.e., traffic control)

II. General Safety

Module III. Job Specific Training (Chemical Material Handlers, Operations Supervisors, Management and Staff Specialist)

I. Basic Chemical Safety - Training in various chemical hazards presented by the material handled by Clean Harbors.

II. Contingency Plan Implementation/Emergency Response

A. Alarm systems

B. Evacuation

C. Notification

D. Spill control

E. Overpacks - Leakers, etc.

F. Use and maintenance of emergency equipment (eye/body wash, vermiculite, Hazorbs, etc.)

III. Remedial First Aid (where applicable)

IV. Personal Protection Equipment - Use, Maintenance and Limitations

A. Air Packs

B. Respirators

C. Gloves

D. Steel Toe

E. Eye Protection

F. Protective Clothing

V. General Fire Safety - Including extinguisher use/location, safe evacuation methods

VI. Materials (Drum) Handling (per OSHA Guidelines)

VII. "Health Monitoring Program"

VIII. RCRA Training

A. Regulatory Overview

B. Hazardous Waste Identification

C. Universal Waste

D. Generator Status

E. Accumulation and Storage

F. Manifest and Land Disposal Restrictions

G. TSD Requirements

IX. Transportation - Regulations and Procedures (as applicable)

A. Truck Transportation - General Requirements

1. Driver Requirements
   a. Physical Exam
   b. License
   c. Ryder Certification (If Applicable)
2. Drivers Daily Log
   a. Purpose
   b. Format
   c. Preparation
3. Trip Sheets
4. Vehicle Inspection
5. Weight Limits
6. Accidents (No Hazardous Materials Involvement) Procedures

B. Hazardous Materials Transportation

1. Placarding
   a. DOT Requirements
   b. PCB Placarding
2. Special Requirements
   a. Shipping Manifest - Placement
   b. Hazardous Materials Permits
3. Accidents with Hazardous Materials Involvements - Procedures

Date: December 19, 2014
Revision: 0

Module IV. Supplemental training for Emergency Response Team Members

I. Basic Chemical Safety - Training in various chemical hazards presented by the material handled by Clean Harbors.

II. Contingency Plan Implementation/Emergency Response
   A. Alarm systems
   B. Evacuation
   C. Notification
   D. Spill Control
   E. Overpacks - Leakers, etc.
   F. Use and Maintenance of Emergency Equipment (eye/body wash, vermiculite, Hazorbs, etc.)

III. Remedial First Aid (where applicable)

IV. Personal Protection Equipment - Use, Maintenance and Limitations
   A. Air Packs
   B. Respirators
   C. Gloves
   D. Steel Toe
   E. Eye Protection
   F. Protective Clothing

V. General Fire Safety
   A. Extinguisher and hose use and location
   B. Operation of hoses and extinguishers

C. Hazards associated with chemical fires (explosions, fumes, etc.)

VI. Post Emergency Procedures

A. Clean-up of affected areas

B. Restoring or replacing equipment used during an emergency

It is expected that certain positions at the facility will require that employees possess an extensive knowledge of certain subjects covered in the training program upon hiring (e.g., Health and Safety Manager). Therefore, these persons will receive training as necessary in those areas specific to the facility or areas in which they have not received previous training.

Frequency of Training

All Clean Harbors employees will complete the appropriate training program within six months of their assignment or procurement of any position as listed herein pertaining to the management of hazardous waste. During this initial training period, trainees receive instruction at least bi-weekly through meetings and self study, and often daily through on-the-job training.

Upon completion of the initial training, each employee may be required to demonstrate satisfactory comprehension via a verbal or written test or by practical exam. After the completion of the initial training, employees receive continuing training on a regular basis to review introductory information and to increase the employee's knowledge of hazardous waste and materials handling through new information.

Refresher training will be provided to employees on an annual basis. This refresher training may be provided as an annual course or as modules that are conducted throughout the year. During this annual refresher, basic policy information, facility operations, and regulatory requirements are reviewed. Additional employee training will be conducted whenever there is a change in facility activities or operations

In accordance with 29 CFR 1910.120, waste handling employees will be scheduled for a twenty-four hour training course upon starting work at the facility. An eight hour annual refresher update will also be required for these employees at the facility.

Training Techniques

The training program utilizes three main techniques to convey the information listed in the training modules. These techniques are on-the-job training, classroom instruction and programmed instruction. During the training process, an employee may receive training via any or all of these techniques. Each training module as listed will consist of a combination of these techniques. A description of each technique follows.

(a) On-the-job Training (OJT)

For personnel not in supervisory positions, a structured OJT program is the most effective method for providing employees with the fundamentals of the position. The program utilizes a combination of standardized procedures / practices, hands-on instruction and specific performance criteria to train new employees. Hand-on instruction is conducted under the guidance/supervision of an experienced

employee/mentor. The OJT program also includes periodic safety meetings, review of the day's or week's activities, and meetings to address special problems, new processes, or new procedures.

Written documentation, testing, or other designated instructional evaluation methods may be utilized to determine when a new employee is considered competent in the essential aspects of their job function(s) or task(s). Implementation of the OJT program is the responsibility of an employee's supervisor.

(b) Classroom Instruction

Classroom instruction is the most formal component of the training program and is the easiest form of instruction to document. A formal lesson plan will be developed for each topic to be presented in classroom instruction. The training director will decide what topics are best suited for formal instruction and then develop a program for the topic presentation. Topics typically suited for classroom instruction are first aid, use of personnel safety equipment, regulations, and discussion of facility operating procedures or emergency plans.

Learning aids and demonstrations are very useful tools for instruction. Through the showing of a movie or an actual demonstration, personnel are exposed to conditions that might only be faced in an emergency situation. Classroom instruction sessions will utilize information as available through regulatory and safety officials, consultants, and local educational institutions.

(c) Programmed Instruction

Programmed instruction may cover many of the same topics covered in classroom instruction but without an instructor present. The instruction consists of computer based training (CBT), required readings or film viewing, and the employee is either formally or informally evaluated for comprehension. Programmed instruction enables a person to become familiar with the facility's operation, equipment, and regulatory requirements.

Training Director

It is required in 40 CFR 264.16(a)(2) that permitted facilities have a training program under the direction of a qualified person trained in hazardous waste management. The personnel training program for this facility is directed by the Corporate Training Manager (hereafter Training Manager).

The Training Manager may also designate various personnel to assist in the development and instruction of specific training programs (e.g., Operational Supervisors conducting on-the-job training). Instructors may include personnel from both Clean Harbors and outside organizations. In most instances Clean Harbors management and supervisory personnel qualify as instructors by way of experience, education, and training. These individuals are given the assignment of instructing their subordinates in the procedures required by RCRA and are responsible for scheduling and documenting training sessions.

Clean Harbors Recycli Services of Ohio, LLC

	HEALTH AND SAFETY TRAINING - GENERAL REQUIREMENTS					CONTROLLED SUBTANCES		FIRST AID & CPR (recommended for personnel performing buddy care)		SAFE PROCEDURES for MATERIAL HANDLING
COURSE	24 HR HAZWOPER (Initial)	40 HR HAZWOPER (Initial)	HAZWOPER SUPERVISOR (Initial)	8 HR HAZWOPER REFRESHER (Annual)	HEALTH & SAFETY for ADMIN. (Annual)	EMPLOYEE (Initial)	SUPERVISOR (Initial)	FIRST AID (Annual/ Triennial)	ADULT CPR (Annual/ Biennial)	SAFE PROCEDURES for MATERIAL HANDLING (Initial)
COURSE CODE	HS 101	HS 102	HS 103	HS 104	HS 106	HS 107a	HS 107b	HS 108a, HSC 051, HSC 053-057	HS 108,HS 108b, HSC 050-057	HS 110
INSTRUCTOR CERTIFICATION	CHES CERTIFIED	CHES CERTIFIED	CHES CERTIFIED	CHES CERTIFIED	QUALIFIED PERSON	TRAINED PERSON	CHES CERTIFIED	FIRST AID CERTIFIED	CPR CERTIFIED	CHES CERTIFIED
JOB TITLE/POSITION										
PLANT ENGINEER	M			M		M				
PROCESS OPERATOR	M			M		M		M(a)	M(a)	
SHIFT SUPERVISOR/LEADMAN	M		M	M		M	M(c)	M(a)	M(a)	
LAB PERSONNEL	M			M		M				
MAINTENANCE	M			M		M				
FACILITY GENERAL MANAGER	M		M	M		M	M			
WAREHOUSE/MATERIAL HANDLER	M			M		M		M(a)	M(a)	
OPERATIONS MANAGER	M	M(b)	M	M		M	M	M(a)	M(a)	
H&S/COMPLIANCE PERSONNEL	M	M(b)	M		M	M	M	M(b)		M

Attachment 8-3

Training Matrix

	ACCIDENT INVESTIGATION	DEFENSIVE DRIVING	FORKLIFT OPERATION	LAB SAFETY	INFECTION CONTROL	LOCKOUT/ TAGOUT	EMERGENCY RESPONSE			CONFINED SPACE ENTRY
COURSE	ACCIDENT INVESTIGATION (Initial)	DEFENSIVE DRIVING (Remedial Training)	FORKLIFT OPERATION (Initial)	CHEMICAL HYGIENE PLAN (Inital)	BLOOD-BORNE PATHOGEN (Annual)	LOCKOUT/ TAGOUT (Initial)	HAZMAT TECHNICIAN (Initial)	HAZMAT SPECIALIST (Initial)	EMR REFRESHER (Annual)	AUTHORIZED ENTRANT (Initial)
COURSE CODE	HS 151	HS 155	HS 201	HS 202	HS 203	HS 205	HS 206	HS 306	HS 406	HS 207
INSTRUCTOR CERTIFICATION	CHES CERTIFIED	QUALIFIED PERSON	QUALIFIED PERSON	QUALIFIED PERSON	QUALIFIED PERSON	QUALIFIED PERSON	CHES CERTIFIED	CHES CERTIFIED	CHES CERTIFIED	CHES CERTIFIED
JOB TITLE/POSITION										
PLANT ENGINEER						M(b)				
PROCESS OPERATOR			M(b)		M(a)	M(b)				
SHIFT SUPERVISOR/LEADMAN	M		M(b)		M(a)					M(e)
LAB PERSONNEL				M						M(e)
MAINTENANCE						M(b)				M(e)
FACILITY GENERAL MANAGER	M		M(c)			M(b)				
WAREHOUSE/MATERIAL HANDLER			M(b)		M(a)					M(e)
OPERATIONS MANAGER	M		M(c)		M(a)	M(b)				
H&S/COMPLIANCE PERSONNEL			M(b)	M(b)						M(b)

Attachment 8-3

Training Matrix

	CONFINED SPACE ENTRY		TRANSPORTATION	ENVIRONMENTAL	TRNSP and H&S	ENVIRONMENTAL		ENVIRONMENTAL	
COURSE	ENTRY SUPERVISOR (Initial)	RESCUE AND RETRIEVAL REFRESHER (Annual)	HAZARD MATERIALS TRANSPORTATION SKILLS (HMTS) (Triennial)	FIELD CHEMIST SKILLS TRAINING (FCST) (Initial)	WAREHOUSE OPERATIONS (Inital)	RCRA UPDATE (Annual)	HAZARDOUS MATERIALS SAMPLING (Initial)	COMPLETING the WASTE PROFILE (Initial)	HANDLING PCB WASTE (Initial)
COURSE CODE	HS 307	HS 208	HMTS Program	FCST Programs	ET 120	ET 140	ET 143	ET 144	ET 150
INSTRUCTOR CERTIFICATION	CHES CERTIFIED	CHES CERTIFIED	CHES CERTIFIED	CHES CERTIFIED	QUALIFIED PERSON	QUALIFIED PERSON	QUALIFIED PERSON	QUALIFIED PERSON	QUALIFIED PERSON
JOB TITLE/POSITION									
PLANT ENGINEER						M(i)			
PROCESS OPERATOR			M		M(b)	M(i)			
SHIFT SUPERVISOR/LEADMAN	M(d)	M(a)	M		M(b)	M(i)	M(b)		M(b)
LAB PERSONNEL			M			M(i)	M(b)	M(b)	M(b)
MAINTENANCE		M(a)	M			M(i)			
FACILITY GENERAL MANAGER	M(d)	M(a)	M		M(b)	M(i)	M(b)		M(b)
WAREHOUSE/MATERIAL HANDLER		M(a)			M(b)	M(i)	M(b)		M(b)
OPERATIONS MANAGER	M(c)	M(a)	M		M(b)	M(i)	M(b)		M(b)
H&S/COMPLIANCE PERSONNEL	M(a)	M(a)	M(b)		M(i)	M(b)	M(b)	M(b)	

Attachment 8-3

Training Matrix

	TRANSPORTATION		ENVIRONMENTAL	TRANSPORTATION	
COURSE	DRUM CLOSURE (Initial)	SHIPPING HAZMAT SAMPLES (Biennial)	LDR RESTRICTION/ CERTFICATION GUIDE (Initial)	IMPORT & EXPORT OF HAZ WASTE REGULATIONS (Initial)	TDGA (Triennial)
COURSE CODE	ET 237	ET 330	ET 350	ETC 070	ETC 071
INSTRUCTOR CERTIFICATION	QUALIFIED PERSON	QUALIFIED PERSON	QUALIFIED PERSON	CHES CERTIFIED	CHES CERTIFIED
JOB TITLE/POSITION					
PLANT ENGINEER					
PROCESS OPERATOR	M(b)				
SHIFT SUPERVISOR/LEADMAN	M(b)	M(b)			M
LAB PERSONNEL	M(b)	M(b)	M		M
MAINTENANCE					M(b)
FACILITY GENERAL MANAGER	M(b)	M(b)			M
WAREHOUSE/MATERIAL HANDLER	M(b)				M
OPERATIONS MANAGER	M(b)	M(b)			M
H&S/COMPLIANCE PERSONNEL		M(b)	M(b)	M(b)	

Additional Course Information can be found on the Training Departments database "Training Courses" and "Training Resources"

TRAINING MATRIX KEY

1. Employee training requirements are to be satisfied prior to job/task (OSHA), within 90 days of performing job/task (DOT), within 180 days of performing job/task (EPA) according to the following code:

   M: Mandatory - Required by company policy, regulatory agencies or both;

   BLANK: Not Applicable.

2. Some training may be necessary for a particular task or assignment that is not evident from this matrix. Facility management should contact their Regional/Divisional Health & Safety/Compliance Manager or Corporate Health & Safety/Compliance departments.

   a. This training is mandatory for personnel that are part of a confined space entry rescue team.

   b. This training is not mandatory unless active participation is required which involves potential exposure(s) to hazardous substances or forces.

   c. This training is mandatory for those positions with employee supervisory responsibility in this area.

   d. This training is mandatory if supervision of entry into confined spaces is required.

   e. This training is mandatory for those positions with job functions associated with confined space entry.

   f. 40-Hour training may be required by permit conditions or contract requirements at specific locations.

   g. DOT driver is required to have additional specific substance abuse training.

   h. Controlled substance training in Canada is only required for designated "safety sensitive positions".

   i. Training required in accordance with regulatory permit.

9

SECTION 9

CLOSURE PLAN

This Closure Plan contains a discussion of the steps that would be necessary should Clean Harbors decide to partially or completely close the Hebron Recycle Center during or at the end of its intended operational life. Procedures outlined for an unplanned partial closure are identical to the procedures that would be used for final planned closure.

The Closure Plan has been prepared to meet the requirements of OAC 3745-55-12. Modifications to this Closure Plan will be made in accordance with the requirements of OAC 3745-50-51. Copies of the approved Closure Plan for the facility will be maintained at the facility office and Clean Harbors's corporate office until certification of closure completeness has been accepted by the U.S. EPA and/or the Ohio EPA.

The Closure Cost Estimate for this Clean Harbors facility is provided as Attachment 9-1A. The unit costs used to calculate the Closure estimates are incorporated in Attachment 9-1A. Documentation of the financial assurance mechanism used to guarantee funding for Closure is provided in Attachment 9-2, and a copy of the Certificate of Liability insurance is provided in Attachment 9-3. The RCRA facility investigation, corrective measures study work plan, and corrective measure plans are provided by reference. The facility layout, Exhibit 2, is included as Attachment 9-4 and the waste code list, from the Hazardous Waste Permit Information Form, is included as Attachment 9-5.

9.1 FACILITY DESCRIPTION

The Clean Harbors Hebron Recycle Center is located in Hebron, Ohio. The street and mailing address is:

Clean Harbors Recycling Services of Ohio, LLC
581 Milliken Drive, SE
Hebron, Ohio 43025

The facility is a solvent recycle plant. It receives various wastes such as; spent Mineral Spirits, dry cleaning wastes (consisting of perchloroethylene and/or mineral spirits), industrial solvents, and from company operated service centers.

The Dry Cleaning wastes are received in bulk and box trailers from Clean Harbors Service Centers and other generators. The Dry Cleaning Process Wastes consist primarily of residues of perchloroethylene and/or mineral spirits, and are collected in sealed containers. The dry cleaning filter cartridge wastes are reduced to a processable form by a shredder and, with other forms of dry cleaning wastes, are reclaimed at this facility.

Spent solvents consisting of chlorinated and non-chlorinated solvents are received in bulk and batch containers (e.g., 55-gallon drums) from industrial users for storage and recycling at this facility. Spent solvent wastes from industries such as the chemical or pharmaceutical process industries received at the facility are classified as characteristic wastes (D-waste codes), non-specific source wastes (F-waste codes), listed wastes from specific sources (K-waste codes), and commercial chemical products, manufacturing intermediates, or off-specification

commercial chemical products (U-waste codes). Most of the time, a waste stream will be some combination of specific components, and be categorized as a D- or F- waste.

The Hebron Recycle Center uses gravity separation, distillation, fractionation, and blending to recover or recycle organic solvents and similar materials. Solids, such as still bottoms and sludges received from customers or other recycle centers will be blended for use in the industrial fuel program. Certain components separated by processing, residuals from recycling, and some wastes received at the facility for storage that are not amenable to processing at the facility are sent off-site for additional processing, reuse, burning for energy recovery, incineration, or disposal.

The facility is not expected to close in the near future. The estimated permitted facility plant life is forty years (2025). The schedule for closure for each hazardous waste handling unit is identical and corresponds to the expected life of the facility. Therefore, closure is expected on each hazardous waste unit and the facility as a whole in 2025.

All closures will be complete and final, with the removal of all wastes and the decontamination of all waste management units, associated equipment, containment systems, and any other contaminated areas (i.e., clean closure). The closure procedures are designed to eliminate the need for contingent closure and contingent post-closure maintenance. Procedures described in this Closure Plan are also applicable to cleaning up of spills and repairing/ decontaminating parts of the facility or equipment.

9.2 MAXIMUM INVENTORY

The maximum inventory, for purposes of calculating the Closure Cost Estimate is determined from the Part A Permit found in Section 1. The Closure Cost Estimate is based on the maximum hazardous waste inventory at the facility.

9.3 CLOSURE ADMINISTRATION

This Closure Plan identifies the steps necessary to completely close the facility. Clean Harbors may amend the Closure Plan, in accordance with the permit change procedures in OAC Rule 3745-50-51, at any time during the active life of the facility. (The active life of the facility is that period during which wastes are periodically received.)

Clean Harbors shall amend the plan:

- Any time changes in operating plans or facility design effects the Closure Plan;
- Whenever there is a change in the expected year of closure of the facility; or
- In the request for permit modification.

The plan will be amended within sixty days of the changes.

Clean Harbors shall notify the U.S. EPA Region V and the Director of the Ohio EPA at least 60 days prior to partial closure and at final closure, except in cases where the facility's permit is terminated or the facility is otherwise ordered by judicial decree or compliance order to cease receiving wastes or to close. The date when Clean Harbors begins closure will be within 90 days after the date on which Clean Harbors expects to receive final volume of wastes. Clean Harbors will notify the Ohio EPA district inspector at least 60 days prior to all partial closures and at final closure in order for a determination to be made as to whether soil borings will need to be collected from the closing unit(s). These borings would be required based on the condition

of the concrete (cracks or gaps) or evidence of excessive spills to verify that soils underneath the tank farms and container storage areas are uncontaminated.

Within one-hundred and eighty days after receiving the final volume of hazardous wastes Clean Harbors shall process and remove from the site, all hazardous wastes in accordance with the approved Closure Plan. The Ohio EPA or U.S. EPA may approve a longer period if Clean Harbors demonstrates that the activities required to comply with this paragraph will, if necessary, take longer than one-hundred and eighty days to complete, or the following requirements are met:

- The facility has the capacity to receive additional wastes.
- There is a reasonable likelihood that Clean Harbors or another party will operate the waste management unit or the facility within a year.
- Closure of the waste management unit or the facility would be incompatible with continued operation of the site.

Clean Harbors has taken and will continue to take all steps necessary to prevent threats to human health and the environment.

Clean Harbors shall complete closure activities in accordance with the approved Closure Plan and within 180 days after receiving the final volume of wastes.

Closure activities will be conducted according to the following schedule after the final volume of waste is received:

1. Container and tank inventory treatment and removal (weeks 1 through 13);
2. Decontamination of tanks and ancillary equipment (weeks 5 through 15);
3. Secondary containment system decontamination (weeks 8 through 20);
4. Closure of general facility areas (weeks 1 though 26); and
5. Closure administration and certification (weeks 1 through 26).

In accordance with OAC 3745-55-13(B), Clean Harbors may request a longer closure period if it becomes apparent that unit or final closure will, of necessity, take longer than 180 days to complete, or the following requirements are met:

- The hazardous waste management unit or facility has the capacity to receive additional wastes;
- There is a reasonable likelihood that Clean Harbors or another party will recommence operation of the unit or facility within one year; or
- Closure of the waste management unit or facility would be incompatible with continued operation of the site.

When closure is completed, all permitted equipment and structures shall have been properly disposed of, or decontaminated by removing all hazardous waste and residues. Within sixty days of the date when closure is completed, Clean Harbors shall submit to the U.S. EPA Region V and Ohio EPA certification both by the owner or operator, and by an independent registered professional engineer, that the facility has been closed in accordance with the

specifications in the approved Closure Plan. The wording of the certification statement will be identical to that required by OAC 3745-50-42 (D) and can be seen in Section 12. The certification document will include, at a minimum, the following information:

1. The certification statement;
2. The approved closure plan or reference to the approved plan;
3. The volume of waste removed or closed in place;
4. All correspondence regarding closure activity after Ohio EPA approval;
5. Details of sampling and analysis methods;
6. Laboratory records (including bench sheets if requested by the DHWM);
7. A narrative describing all activities during closure;
8. Details, including as-built drawings, for landfill closures;
9. Post-closure clean-up documentation; and
10. Signature of owner/operator and of a qualified, independent, registered, professional engineer.

The procedures outlined in this Closure Plan have been designed to meet the requirements of the closure performance standard, as established in OAC 3745-55-11.

9.4 CLOSURE PROCEDURES

Clean Harbors will close the Hebron facility or individual units at the facility by following a sequence that allows maximum flexibility, while meeting all the requirements of OAC 3745-55-10 through 20. Closure operations will involve processing of inventory through the on-site processing equipment if available, or shipment and disposal of inventory off-site; decontamination of tanks and containment systems; removal of residuals generated during the closure process; closure of ancillary operations; and certification of closure. If the on-site inventory is to be processed on-site, the facility's Operating SOP's should be consulted to ensure the safety of all personnel involved in the closure. In the event of any fires, spills, or explosions, the facilty Contingency Plan should be available. The procedures to carry-out closure are presented below. The tanks and containment areas to be closed are listed in Tables 9-1 and 9-2 respectively.

The initial step of facility or unit closure will involve inventory removal. Any product material stored on-site will be transported off-site for sale or reuse. Wastes suited to on-site processing will be reclaimed through the facility's processing equipment, if available, or transported off-site for disposal. Wastes stored in tanks will be pumped directly to the processing equipment, while wastes stored in containers will be emptied to storage tanks and subsequently pumped to the processing equipment. Tanks will be emptied from the lower-most fitting. Wastes that are not suited for on-site processing will be removed to appropriate off-site facilities including incinerators, cement kilns, landfills, or recycling facilities. Waste materials, held in storage tanks, suited for use as fuels will be pumped out to trucks for transportation. Containers of wastes suited for use as fuels will be pumped to storage tanks or directly to tanker trucks for transport to an appropriate facility. Containers of lab packs and other wastes not amenable to processing or use as fuel will be transported to off-site disposal at an approved hazardous waste facility including incinerators and landfills, as appropriate. Although Clean Harbors plans to process its inventory on-site at the time of closure, the Closure Cost Estimate reflects the worst-case assumption that the inventory will be shipped to an off-site facility.

Following the removal of waste inventory, decontamination of tanks, piping, equipment, and containment surfaces (e.g., concrete pads, steel pumps, and floor drains) will commence. During final facility closure, areas will be decontaminated sequentially, starting with the container storage warehouses and then the individual tank farms. Tank entry and decontamination procedures are discussed in Section 9.5. If necessary, secondary containment structures (including sumps) and floor drains will be torn out for further decontamination and subsequently sold as scrap (in the case of the sumps which are all stainless steel). If the structures cannot be adequately decontaminated, they will be disposed at an appropriate off-site facility. Decontamination wash waters and rinseate will be collected in tanker trucks and transported off-site for treatment and disposal at wastewater treatment facilities, cement-kilns, etc., as appropriate. The estimated volumes of rinseate in this Closure Plan and Cost Estimate include all detergent and water rinses. Any residuals generated during decontamination will be collected in DOT approved containers and disposed off-site at an approved facility.

Initial decontamination rinse waters from tanks and secondary containment systems will be handled as hazardous wastes, unless analyzed and determined to be Non-Hazardous. Samples of the final rinseate will be collected using Coliwasa Samplers as described throughout the Waste Analysis Plan (Appendix 3-1 of Section 3). One sample of the rinseate in each tank and for each 2,500 square feet of secondary containment area (pumped from the rinsed secondary containment systems) will be collected and analyzed in accordance with the procedures specified in Section 9.5.1 for decontamination verification. Rinse waters will be tested for all hazardous waste constituents that have been stored in a given tank or containment area. Each tank or containment area will be evaluated separately, based on the wastes and constituents that have been stored within. All waste codes specified on the Part A Permit, Section 1, may potentially be stored at any given permitted locale, storage area or tank, throughout the facility.

During closure activities, stormwaters collected in the permitted secondary containment areas will be managed as hazardous wastes if the stormwater contains levels of hazardous constituents from wastes stored at the facility. For the closure cost estimate it is assumed that all contaminated stormwater will be at or above facility stormwater permit discharge limits and will be treated on-site in the wastewater treatment plant, or other processing equipment, as deemed necessary.

TABLE 9-1
TANKS TO BE CLOSED

Tank Farm	Tank Number	Capacity	Usage
No. 1	32	15,000	Hazardous Waste
	33	15,000	Hazardous Waste
	34	15,000	Hazardous Waste
	35	15,000	Hazardous Waste
	36	15,000	Hazardous Waste
	37	15,000	Hazardous Waste
	39	15,000	Hazardous Waste
	40	15,000	Hazardous Waste
	41	15,000	Hazardous Waste
	42	15,000	Hazardous Waste
	43	15,000	Hazardous Waste
	44	15,000	Hazardous Waste
	45	15,000	Hazardous Waste
	49	20,000	Hazardous Waste
	50	20,000	Hazardous Waste
	51	30,000	Hazardous Waste / Product Storage
	52	30,000	Hazardous Waste / Product Storage
	53	30,000	Hazardous Waste / Product Storage
	56	15,000	Hazardous Waste / Product Storage
	57	15,000	Hazardous Waste / Product Storage
	58	15,000	Hazardous Waste / Product Storage
	59	30,000	Hazardous Waste / Product Storage
	60	30,000	Hazardous Waste / Product Storage
	61	30,000	Hazardous Waste / Product Storage
	63	15,000	Hazardous Waste
	65	15,000	Hazardous Waste / Product Storage
	66	15,000	Hazardous Waste / Product Storage
	67	30,000	Hazardous Waste
	68	30,000	Hazardous Waste / Product Storage
	69	30,000	Hazardous Waste / Product Storage
No. 2	80	15,000	Hazardous Waste / In-Process
	81	15,000	Hazardous Waste / In-Process
	82	15,000	Hazardous Waste / In-Process
	83a	7,500	Hazardous Waste / In-Process
	83b	7,500	Hazardous Waste / In-Process
	84a	7,500	Hazardous Waste / In-Process
	84b	7,500	Hazardous Waste / In-Process
	85	15,000	Hazardous Waste / In-Process
	86	15,000	Hazardous Waste / In-Process
	87	15,000	Hazardous Waste / In-Process
	88	15,000	Hazardous Waste / In-Process
	89a	7,500	Hazardous Waste / In-Process
	89b	7,500	Hazardous Waste / In-Process
	90	15,000	Hazardous Waste / In-Process

TABLE 9-1
TANKS TO BE CLOSED

Tank Farm	Tank Number	Capacity	Usage
	91	15,000	Hazardous Waste / In-Process
No. 2	92a	7,500	Hazardous Waste / In-Process
	92b	7,500	Hazardous Waste / In-Process
	93	15,000	Hazardous Waste / In-Process
	94a	7,500	Hazardous Waste / In-Process
	94b	7,500	Hazardous Waste / In-Process
	95	15,000	Hazardous Waste / In-Process
	100	15,000	Hazardous Waste / In-Process
	101	15,000	Hazardous Waste / In-Process
	102a	7,500	Hazardous Waste / Wastewater
	102b	7,500	Hazardous Waste / Wastewater
	103	15,000	Hazardous Waste / In-Process
	104	15,000	Hazardous Waste / In-Process
	105	15,000	Hazardous Waste / In-Process
	106	30,000	Hazardous Waste / Wastewater
	107	30,000	Hazardous Waste / Wastewater
	108	15,000	Hazardous Waste / Product Storage
	109	15,000	Hazardous Waste / In-Process
	110	15,000	Hazardous Waste / In-Process
	111	30,000	Hazardous Waste / In-Process
	112	30,000	Hazardous Waste / In-Process
	113	15,000	Hazardous Waste / In-Process
	114	15,000	Hazardous Waste / In-Process
No. 4	203	15,000	Hazardous Waste
	204	15,000	Hazardous Waste
	205	15,000	Hazardous Waste
	209	15,000	Hazardous Waste
No. 6	96	12,000	Hazardous Waste
	97	20,000	Hazardous Waste
	98	20,000	Hazardous Waste / In-Process
	Bin #2	5,500	Hazardous Waste Solids

NOTE: Design information for the tank systems can be found in Section 4

TABLE 9-2
CONTAINER STORAGE AREAS TO BE CLOSED

STORAGE AREA	MAXIMUM STORAGE CAPACITY	
	GALLONS	INDIVIDUAL UNIT CAPACITY (EQUIVALENT 55-GALLON DRUMS)
No. 1	**158,400**	**2,880**
No. 2 Total	**14,220**	**257**
B	6,150	111
E	8,070	146
Truck Station No. 1	**13,200**	**240**
Truck Station No. 2	**13,200**	**240**
TOTAL	**199,020**	**3,617**

NOTE: All container storage areas are concrete, design information can be found in Section 4

Closure operations will be observed by an independent, registered professional engineer. The engineer will supply Clean Harbors with a certification that facility closure has been completed in accordance with the approved Closure Plan. Clean Harbors will forward that certification to the U.S. EPA and the Ohio EPA. The independent engineer will observe those closure operations that he or she deems necessary to assure compliance and Clean Harbors will notify the Ohio EPA at least 5 working days notice before starting such operations. These critical activities include, but are not necessarily limited to, soil sampling, soil removal, backfilling, final cover placement, structure decontamination, etc. The engineer will review all documents which support the certification. A Clean Harbors employee will supervise the closure operations, and Clean Harbors will provide a separate certification of closure.

Establishing Background Contaminant Levels in Soils

To establish background levels for naturally occurring RCRA constituents without influence from facility operations, soil data will be collected. For each soil type present in the vicinity of the permitted hazardous waste units, soil samples will be collected from twelve locations. The number of sampling locations may be reduced if chemical similarity between soil types or horizons can be demonstrated using standard statistical techniques. Sampling locations will be selected based upon the likelihood of facility related impacts being detected (i.e., sampling will occur in areas least likely to be impacted). All sampling and analysis will be conducted in accordance with methods in U.S. EPA Publication SW-846.

The following statistical procedure is used to calculate an action level, or upper confidence limit, to determine a clean standard for each hazardous constituent present in background soils:

action level (upper confidence limit) = mean of the background population + two times the standard deviation of the background population.

If it is discovered that the populations are not normally distributed, Clean Harbors shall search for a transformation that makes the populations approximately normal. The same transformation must be applied both to the background data as well as the data collected from the closure area(s). If the data cannot be transformed to normality, Clean Harbors must develop an alternative statistical procedure(s) to calculate an action level, and submit it to the Ohio EPA for review and approval.

9.5 TANK CLOSURE PROCEDURES

All tanks will be closed using the following procedures, during both partial and final closures. Similar procedures will be followed if tanks are reassigned from waste storage, or when tanks are replaced.

9.5.1 Tank Decontamination

Prior to decontamination, the contents of each tank will be pumped out to processing units or to tanker trucks. To the extent possible, tank contents will be pumped out using equipment and following procedures normally used during operations. Operating records will be used to determine the identity of the tank contents and to assess the appropriate disposition of the stored materials.

Access to the tanks is obtained by removing manways. Once the tanks have been opened, they will be provided with positive ventilation. The tanks will then be inspected to determine the approximate quantity and physical properties of any residual material.

Following characterization of the residuals (using operating records and visual inspection), a determination will be made as to effective removal and disposition. Residuals removed from hazardous waste storage tanks will be managed as a hazardous waste unless they were received as "characteristic" wastes only and can be shown analytically to no longer exhibit any hazardous characteristics.

Prior to any person entering a tank, waste and residual materials will be removed to the fullest extent possible using a vacuum truck, pumps, scrapers, and/or shovels. Waste tanks and piping will then be decontaminated using a high pressure wash system or steam cleaning.

Decontamination of piping, pumps, etc. will be accomplished as rinseates are flushed to and from hazardous waste storage tanks. To the extent that separate decontamination is required (e.g., for equipment not flushed during tank decontamination), the decontamination procedure will be carried out in a prepared decontamination area specifically set up within the most convenient secondary containment system. The prepared decontamination area will include a polyethylene liner sloped to collect rinseates, which will be removed and properly handled.

The amount of decontamination fluids used will be kept to a minimum in order to limit the amount of impacted material that must be disposed. Approximately 27,000 gallons of rinseate will result from the decontamination of tanks, with one sample of rinseate being collected from each tank. Rinseates will be transported off-site for treatment and/or disposal. A sample of the final rinseate will be collected and analyzed for contaminants using methods in U.S. EPA Publication SW-846. A unit will be considered decontaminated if the rinseate meets the decontamination verification standard described at the end of Section 9.5.1.

Any residues and waste materials generated during closure (e.g., contaminated protective clothing, rags, contaminated scrapers) will be placed in containers and properly managed.

Following decontamination, all manways and access points will be exposed, allowing the oxygen levels to remain adequate. All appurtenant piping, fittings, and pumping equipment will be disconnected and removed. Cleaning and flushing of this piping may be done prior to, during, or after the tank cleaning, whichever proves most efficient to the cleaning contractor. Tanks will be left in place after decontamination, or will be sold for reuse or scrap.

After the tanks and equipment have been decontaminated, the secondary containment structure will be examined for evidence of spills or residuals such as staining. The containment structure will be decontaminated by brushing down all surfaces and subsequently pressure washing the surface with a detergent solution. Approximately 52,000 gallons of rinseate will result from the decontamination of secondary containment systems of the hazardous waste storage tank farms, container storage areas, and the truck stations used for loading and unloading of hazardous waste. The rinseate will be transported off-site to an approved waste management facility. Following washing, the containment structure will be rinsed with water. Samples of the final rinseate from decontamination of tanks and secondary containment systems will be collected using Coliwasa Samplers as prescribed in the Waste Analysis Plan (Appendix 3-1 of Section 3). One sample of the rinseate in each tank and for each 2,500 square feet of secondary containment area (pumped from the rinsed secondary containment systems) will be collected and analyzed for decontamination verification. Decontamination of the tanks and containment structures will be considered complete when the following standards for the rinseate from these operations are met:

Decontamination Verification

The final rinseate from decontamination will be tested and equipment considered to be clean when constituents in the rinseate fall below the following standards:

- Fifteen times the public drinking water maximum contaminant level (MCL) for hazardous constituents as promulgated in OAC 3745-81-11 for inorganics and OAC 3745-81-12 for organics;

- If an MCL is not available for a particular contaminant, then fifteen (15) times the maximum contaminant level goal (MCLG) as promulgated in 40 CFR 141.50 shall be used as the clean standard. If the MCLG is zero (0), fifteen (15) times the contaminant's practical quantitation limit(PQL) in groundwater shall be used as the clean level; or

- If the product of fifteen times the MCL or MCLG exceeds 1 mg/L or if neither an MCL nor an MCLG is available for a particular contaminant, 1 mg/L shall be used as the clean standard.

Rinseates will be treated on-site, as appropriate, in equipment that has not yet been decontaminated, or they will be transported to a facility for final disposition. Any rinseate generated in a tank or secondary containment system, which handled listed hazardous waste, will be handled as a hazardous waste if testing using SW-846 methods determines that there are detectable levels of hazardous constituents.

If the rinseate does not meet the clean standard after the initial decontamination, Clean Harbors will perform the decontamination procedure again. Any impacted items (e.g., concrete, tanks, etc.), which stored or served as secondary containment for listed hazardous waste, will be handled as a listed hazardous waste if the rinseate clean standards established in the Closure Plan cannot be met.

If decontamination cannot be achieved by the normal closure procedures the impacted concrete will be removed and then the underlying soil will be analyzed for contamination. Soils will be considered impacted but not hazardous if soil analysis reveals that the concentration of any naturally occurring metal contaminant in the soil is above background concentration for total metals or in the event that the concentration of non-naturally occurring hazardous constituents is above analytical detection limits using methods in U.S. EPA Publication SW-846, an additional work plan will be developed. This work plan will be submitted to Ohio EPA for approval as a modification to the approved closure plan.

When all components of the secondary containment system have been decontaminated, the closure of the unit will be completed. All waste generated during closure will be treated and disposed in appropriate permitted or approved facilities as outlined in Section 9.4.

9.5.2 Tank Entry Procedures

Because the storage tanks are considered "confined spaces" (i.e., spaces open or closed having a limited means of egress in which toxic gases or flammable vapors might accumulate or an oxygen deficient environment may occur), confined space entry procedures are followed whenever entering a tank.

9.6 CONTAINER STORAGE AREA CLOSURE PROCEDURES

The initial step of closure of a container storage area is the removal of the containers from the storage areas, and sorting them by ability to process on-site or not. Whenever possible, containerized wastes will be processed on-site. Inventory will be removed by opening containers and pumping the liquids to storage or processing units. Residual materials will be removed from containers to the extent possible by inverting the containers and dumping loose materials. The containers will be drained and inspected to verify that they are "RCRA empty." RCRA-empty containers will be transported off-site to be either reconditioned and reused, or scrapped.

Containers of wastes not suited for on-site processing will be checked for package integrity and proper labeling. Manifests will be prepared for shipment of these containers. The containers will then be loaded onto a truck and transported to an appropriate off-site treatment or disposal facility.

After all wastes have been removed from the storage area, the secondary containment surfaces, sumps, and floor drains will be examined for evidence of spills or impact. The containment structure will be decontaminated by brushing down all surfaces and subsequently pressure washing the surfaces with a detergent solution. Approximately 52,000 gallons of rinseate will result from the decontamination of secondary containment systems of the hazardous waste storage tank farms, container storage areas, and the truck stations used for loading and unloading of hazardous waste. Following sampling and analysis, the rinseate will be transported off-site for final disposition. Following washing, the containment structure will be rinsed with water. Decontamination will be verified by sampling and analyzing the final rinseates following the same procedures described in Section 9.5.1.

Rinseates will be treated on-site, as appropriate, in equipment that has not yet been decontaminated, or they will be transported to a treatment facility for treatment and disposal. Any rinseate generated in a tank or secondary containment system, which handled listed hazardous waste, will be handled as a hazardous waste if testing using SW-846 methods determines that there are detectable levels of hazardous constituents in the rinseate. Furthermore, any rinseates meeting the definition of a hazardous waste will be managed as hazardous; rinseates not exhibiting the characteristics of a hazardous waste (determined by testing) will be handled as non-hazardous.

When all components of the secondary containment system have been decontaminated, the closure of the unit will be completed. All waste generated during closure will be treated and disposed in appropriate permitted or approved facilities as outlined in Section 9.4.

9.7 UST POST-CLOSURE PLAN

On 9/30/1992 Ohio EPA approved an amended closure/post-closure plan for the removal of four (4) UST's. This plan is included in this application by reference. This area was closed as a landfill without a cap as clean closure could not be achieved. The area is currently in the post-closure care period which includes groundwater monitoring and corrective action (see Sections 5 and 10 for more information). The approved closure/post-closure plan requires post-closure care of the unit until the soil and groundwater meet specified decontamination levels. This submittal does not include a post-closure cost estimate because the facility is currently working with Ohio EPA to incorporate the corrective action associated with this area with the site wide corrective action associated with the 1985 fire (see Sections 5 and 10). A post-closure cost estimate will be submitted to Ohio EPA within 60 days of the agency's approval of the results from the current investigation being conducted by Clean Harbors.

Attachment 9-1A

Closure Cost Estimate

CLOSURE COST ESTIMATE

This attachment contains the Closure Cost Estimate for closure of the existing Clean Harbors Hebron Recycle Center as required by OAC 3745-50-44(A)(15). All estimates are based upon the cost to a third party to perform the closure activities described in the associated Closure Plan presented in Section 9 of this permit application. The unit costs used to derive cost estimates are presented as a side note to each individual calculation.

OAC 3745-55-42(A)(12) requires the owner or operator of hazardous waste management units to base closure and post-closure cost estimates on "third party" costs. Third party has been defined in the regulations as a party other than the parent or the subsidiary of the owner or operator. In this Closure Cost Estimate, Clean Harbors has used third party costs in determining the total closure costs, assuming that a third-party will process or dispose of all inventory and residuals off-site and decontaminate all permitted units at the time of closure.

Third party costs are used in this Closure Cost Estimate for the purpose of generating a worst-case estimate for Financial Assurance. Actual closure activities will probably involve use of Clean Harbor's personnel, on-site recycling and reclamation as well as fuel blending, and subsequent sale of the products generated. However, this Closure Cost Estimate does not incorporate salvage values or any other credit that will exist if closure activities are performed by Clean Harbors.

The estimated closure cost corresponds to the complete final closure of the facility as it currently exists, accounting for all existing regulated units and the existing maximum hazardous waste inventory. As indicated in the associated Closure Plan, closure of the facility will involve off-site processing of the waste. All other on-site processed materials will be shipped off-site for use as fuels. The closure cost estimate assumes that normal decontamination procedures will yield clean closure.

Clean Harbors currently utilizes closure insurance as the financial assurance mechanism which includes the costs for performing closure of all hazardous waste management units.

This Closure Cost Estimate incorporates administrative costs, which accurately represent administrative expenses, including supervision, project management, and other direct costs, that will be required during the closure period.[1]

The Closure Cost Estimate shall be adjusted annually for inflation and revised whenever a change in the Closure Plan increases or decreases the cost of closure. The Closure Cost Estimate will be revised as new units are brought into operation, and will be submitted no later than 30 days after the Ohio EPA has approved the revised Closure Plan. Financial assurance will also be revised at least 60 days prior to starting hazardous waste operations in the new units. Copies of the original Closure Cost Estimate, proposed Cost Estimate, any revisions, and the latest adjusted estimate shall be kept at the facility during the facility's operating life.

Facility Closure Cost

As summarized in Table 6, the estimated cost for closing the facility is $1,691,207. The calculations performed to arrive at this total are found in Tables 1 through 5 of this Closure Cost Estimate (the unit costs and assumptions have been included).

Please note that insurance is carried for contingent post-closure of Tank Farms 1 and 2 even though that requirement (OAC RULE 3745-55-97(C)) no longer applied to this facility once the secondary containment was upgraded in 2001.

---

1 Final Report/Guidance Manual: Cost Estimates for Closure and Post-Closure Plans; prepared by Pope-Reid Associates, Inc. for U.S. EPA; November 1986.

TABLE 1

INVENTORY REMOVAL AND OFF-SITE PROCESSING

	Item and Assumption	Cost
1	Removal and Processing of Container Inventory	
	a. Transport of containerized wastes inventory (3,936 drums, 80 drums/truck @ $5.00/loaded mile, 150 miles)	36,750
	b. Off-site processing of containerized wastes (3,936 drums $66/drum)	260,930
2	Removal and Processing of Container Inventory	
	a. Bulk transportation of tank inventory (1,237,500 gal. @ 7,000 gal/truck, $645/truck, 120 miles)	114,165
	b. Off-site disposal tank inventory (1,237,500 gal @ $0.50/gal)	$618,750
	TOTAL INVENTORY REMOVAL AND OFF-SITE PROCESSING COST	**$1,030,595**

TABLE 2

DECONTAMINATION, DISMANTLING, AND REMOVAL OF TANKS AND ASSOCIATED EQUIPMENT

	Item and Assumption	Cost
1	Rental/Purchase of Decontamination Equipment	
	a. Vacuum truck (24 days @ $675/day) (includes use at secondary containment areas)	$16,200
	b. High pressure/low volume cleaner (75 tanks @ 4 tanks/day, $115/day)	$2,156
	c. Purchase scrapers, shovels, brooms, etc. (lump sum)	$3,975
	d. Purchase polyethylene liner for decontamination pad. (40 ft. x 100 ft.)	$332
2	Labor for Decontamination (75 tanks; 8 person-hours/tank, @ $46/hour)	$27,600
3	Handling of Decontamination Wash/Rinsewaters	
	a. Off-site processing of washwaters and rinseates (81,217 gal. @ $0.47/gal)	$38,172
	b. Bulk transportation of rinseate (81,217 gallons @ 7,000 gallons/truck, $642/truckload)	$7,704
4	Decontamination Sampling and Analysis (75 tanks @ 1 sample/tank, $359/sample)	$26,925
5	Removal, Transportation and Disposal of Hazardous Waste Storage Tanks (75 tanks @ $1005 each)	$76,875
		$199,939
	TOTAL TANK DECONTAMINATION, DISMANTLING, AND REMOVAL COST	**$199,939**

TABLE 3

DECONTAMINATION OF SECONDARY CONTAINMENT AREAS

	Item and Assumption	Cost
1	Rental/Purchase of Decontamination Equipment	
	a. Vacuum truck (Included in Table 2 cost summary)	
	b. High pressure/low volume cleaner (19 areas @ 1day/area, $120/day)	$2,280
2	Labor for Decontamination (64,849 ft^2; 2 person-hours/1,000 ft^2, @ $38/hour)	$5,048
3	Handling of Decontamination Wash/Rinsewaters	
	a. Transport of miscellaneous residues (64,849 ft^2 @ 1 drum/5,000 ft^2, 80 drums/load, $5.00/loaded mile/truck, 125 miles.)	$625
	b. Off-site treatment/disposal of miscellaneous residues (15 drums, @ $ 98/drum)	$1,470
	c. Off-site processing of rinseates from all secondary containment areas* (64,850 gal. @ $0.47/gal)	$30,479
	d. Bulk transportation of rinseate (64,850 gallons @ 7,000 gallons/truck, $640/truckload)	$6,420
4	Decontamination Sampling and Analysis (64,849 ft^2 @ 1 sample/2,500 ft^2, $359/sample)	$9,312
	TOTAL SECONDARY CONTAINMENT AREAS DECONTAMINATION	**$55,634**

* The secondary containment areas include the tank farms, container storage and handling areas, and truck stations.

Facility: Tank Farms: 13,339 ft^2; Container Storage Areas (including truck stations 1, 2, and 7) 38,337 ft^2; and Truck Stations (excluding No. 1, 2, and 7) 13,173 ft^2

TABLE 4

MISCELLANEOUS FACILITY CLOSURE COSTS

	Item and Assumption	Cost
1	Treatment of Contaminated Stormwater from Uncovered Secondary Containment Areas*	
	a. Off-site treatment of contaminated stormwater (22,057 gal. @ $.47/gal)	$10,367
	b. Bulk transportation of stormwater (22,057 gallons @ 7,000 gallons/truck, $642/truckload)	$2,022
2	Utilities (180 days @ $158/day)	$28,440
3	Personal Protective Equipment Cost	
	a. Tyvek suits, gloves, boots, etc (689 person-hours; /8 hours/day, @ $44/day)	$3,790
	b. Respiratory protective equipment (Lump sum)	$2,913
	TOTAL MISCELLANEOUS FACILITY CLOSURE COST	**$47,532**

* Assuming that rainfall over 180 day closure period will be approximately 15 inches (half of mean annual rainfall), and that 10% of this rainfall/stormwater, that is 1.5 inches, becomes contaminated.

TABLE 5

CLOSURE ADMINISTRATION AND CERTIFICATION

	Item and Assumption	Cost
1	Administration (including project management, supervision)	$55,190
2	Closure Certification	
	a. Certification by Independent Professional Engineer (2 4-hour visits/week, 26 weeks @ $168.50/hour)	$35,772
	TOTAL CLOSURE ADMINISTRATION COSTS	**$90,962**

TABLE 6

TOTAL CLOSURE COSTS

	Item and Assumption	Cost
1	Inventory Processing and Removal	1,030,595
2	Decontamination of Tanks and Associated Equipment	$199,939
3	Secondary Containment Areas Decontamination	$55,634
4	Miscellaneous Facility Closure Costs	$47,532
5	Administration and Certification	$90,962
	SUBTOTAL CLOSURE COST	$1,424,662
	15% Contingency	$213,699
	TOTAL CLOSURE COST	**$1,638,362**
	Inflation Cost 2013 1.017	**$1,666,214**
	Inflation Cost 2014 1.015	**$1,691,207.00**
	TOTAL CLOSURE COST	**$1,691,207.00**

Attachment 9-2

Financial Assurance Mechanism

John R. Kasich, Governor
Mary Taylor, Lt. Governor
Craig W. Butler, Director

November 26, 2014

David DeSha
Clean Harbors Recycling Services of Ohio, LLC
581 Milliken Drive
Hebron, OH 43025

Re: **Clean Harbors Recycling Services of Ohio, LLC**
Permit - Intermediate
Acknowledgement
RCRA C – Hazardous Waste
Licking County
OHD980587364

Subject: Hazardous Waste Permit Modification - Class 1 Acknowledgment

Dear Mr. DeSha:

On October 7, 2014, Ohio EPA received notification for a Class 1 hazardous waste permit modification from Clean Harbors Recycling Services of Ohio, LLC. The modification implemented the following change to the permit:

The Class 1 permit modification submitted to Ohio EPA updates the facility's closure and post closure cost estimates and associated financial assurance.

With this letter, Ohio EPA acknowledges the above referenced Class 1 modification[1] submitted pursuant to Ohio Administrative Code (OAC) Rule 3745-50-51, and accordingly has updated the facility's permit application and/or permit. The updated application/permit can be retrieved from the Agency's eDocument Search web site: http://edocpub.epa.ohio.gov/publicportal/edochome.aspx. Please use the "Advanced" search function and search under the document type of "Permit – Intermediate" and then refine the search using the facility's RCRA ID number (Secondary ID) which is noted in the RE: block above.

If you have any questions concerning this letter, please contact Grant Hewett of my staff at (614) 728-3878 .

Sincerely,

Melissa M. Storch

Melissa M. Storch
Manager, Central District Office
Division of Materials and Waste Management

[1] Please note: If the modification application included a claim for confidentiality, Ohio EPA will retain the confidentiality of the document(s) until the Director makes a final determination in accordance with OAC Chapters 3745-49 and 3745-50 as to whether the document(s) constitutes a trade secret and must remain confidential. Ohio EPA will notify you of any determination made as to the confidentiality of the document(s).

Clean Harbors Recycling Services Of Ohio, LLC
581 Milliken Drive SE
Hebron, OH 43025

740-929-3532
www.cleanharbors.com

October 6, 2014

Sent via Federal Express & e-Mail

Jeremy Carroll
Ohio EPA - DHWM
Regulatory and Information Services Section
Lazarus Government Center
50 West Town Street, Suite 700
Columbus, OH 43216-1049
(614) 644-3020

RE: Clean Harbors Recycling Services of Ohio, LLC
OHD 980 587 364
Part B Permit, Class 1 Modification
Updated Closure & Post-Closure Cost Estimate & Financial Assurance

Dear Mr. Carroll:

Clean Harbors Recycling Services of Ohio, LLC (hereinafter, Clean Harbors) is submitting this RCRA Class 1 permit modification for an update to its closure and post closure cost estimates and associated financial assurance. The attached update is being incorporated into Section 9 of the Clean Harbors Part B permit application – Attachments 9-1A and 9-2. Pursuant to OAC 3745-50-51, Appendix B.1, Clean Harbors has determined these changes are a Class 1 Modification.

The coverage for closure and post-closure care has been increased for inflation, effective July 31, 2014. The Implicit Price Deflator used for the increases is 1.015 and was calculated using information obtained from the U.S. Department of Commerce, Bureau of Economic Affairs, Table 1.1.9 Implicit Price Deflators for Gross Domestic Product as indicated below:

2013 Annual GDP 106.570 divided by: 2012 Annual GDP 105.002 = 1.015
Implicit Price Deflator for July 31,2014 = 1.015 or 1.5%
(HEA Table 1.1.9 attached/or reference)

Revised closure cost estimate: $1,666,213.78 x 1.015= $1,691,206.99
Revised post-closure cost estimate: $150,405.99 x 1.015 = $152,662.08

Should you have any questions or comments regarding this matter, please contact me at (423) 413-1218, or at desha.david@cleanharbors.com.

Sincerely,

David A. DeSha
Sr. Compliance Manager

Enclosure

cc: Melissa Storch, OEPA, CDO
Facility files

Enclosure

CLOSURE COST ESTIMATE

This attachment contains the Closure Cost Estimate for closure of the existing Clean Harbors Hebron Recycle Center as required by OAC 3745-50-44(A)(15). All estimates are based upon the cost to a third party to perform the closure activities described in the associated Closure Plan presented in Section 9 of this permit application. The unit costs used to derive cost estimates are presented as a side note to each individual calculation.

OAC 3745-55-42(A)(12) requires the owner or operator of hazardous waste management units to base closure and post-closure cost estimates on "third party" costs. Third party has been defined in the regulations as a party other than the parent or the subsidiary of the owner or operator. In this Closure Cost Estimate, Clean Harbors has used third party costs in determining the total closure costs, assuming that a third-party will process or dispose of all inventory and residuals off-site and decontaminate all permitted units at the time of closure.

Third party costs are used in this Closure Cost Estimate for the purpose of generating a worst-case estimate for Financial Assurance. Actual closure activities will probably involve use of Clean Harbor's personnel, on-site recycling and reclamation as well as fuel blending, and subsequent sale of the products generated. However, this Closure Cost Estimate does not incorporate salvage values or any other credit that will exist if closure activities are performed by Clean Harbors.

The estimated closure cost corresponds to the complete final closure of the facility as it currently exists, accounting for all existing regulated units and the existing maximum hazardous waste inventory. As indicated in the associated Closure Plan, closure of the facility will involve off-site processing of the waste. All other on-site processed materials will be shipped off-site for use as fuels. The closure cost estimate assumes that normal decontamination procedures will yield clean closure.

Clean Harbors currently utilizes closure insurance as the financial assurance mechanism which includes the costs for performing closure of all hazardous waste management units.

This Closure Cost Estimate incorporates administrative costs, which accurately represent administrative expenses, including supervision, project management, and other direct costs, that will be required during the closure period.[1]

The Closure Cost Estimate shall be adjusted annually for inflation and revised whenever a change in the Closure Plan increases or decreases the cost of closure. The Closure Cost Estimate will be revised as new units are brought into operation, and will be submitted no later than 30 days after the Ohio EPA has approved the revised Closure Plan. Financial assurance will also be revised at least 60 days prior to starting hazardous waste operations in the new units. Copies of the original Closure Cost Estimate, proposed Cost Estimate, any revisions, and the latest adjusted estimate shall be kept at the facility during the facility's operating life.

Facility Closure Cost

As summarized in Table 6, the estimated cost for closing the facility is $1,691,207. The calculations performed to arrive at this total are found in Tables 1 through 5 of this Closure Cost Estimate (the unit costs and assumptions have been included).

Please note that insurance is carried for contingent post-closure of Tank Farms 1 and 2 even though that requirement (OAC RULE 3745-55-97(C)) no longer applied to this facility once the secondary containment was upgraded in 2001.

---

1 Final Report/Guidance Manual: Cost Estimates for Closure and Post-Closure Plans; prepared by Pope-Reid Associates, Inc. for U.S. EPA; November 1986.

Please Note: Pages of this application which contain financial assurance mechanism details specific to policy or account numbers have been removed from this web-available version of the document.

To review redacted copies of these removed pages, please contact DMWM's record management staff at (614) 644-2621. Thank you.

10

SECTION 10

CORRECTIVE ACTION FOR SOLID WASTE MANAGEMENT UNITS

10.1 CORRECTIVE ACTION AFTER 1985 FIRE

On November 27 and 28, 1985, a spill and fire occurred at the Hebron Recycle Center which resulted in a release of contaminated materials. The fire destroyed 58 above ground storage tanks in the north tank farm. As part of the cleanup action taken by Safety-Kleen (predecessor to Clean Harbors), contaminated soil was removed from the facility and from the banks of the South Fork of the Licking River. Safety-Kleen conducted a remedial investigation and is implementing corrective measures to address impacted groundwater at the facility. A revised Part B was submitted following the fire which included replacement of the tanks.

A consent order with the U.S. EPA Region V was finalized. A RCRA Facility Investigation/Corrective Measures Study (RFI/CMS) was submitted to U.S. EPA Region V. Currently the remediation of the area is being overseen by Ohio EPA.

10.2 CORRECTIVE ACTION ASSOCIATED WITH REMOVAL OF THE UST

In June 1988 Safety-Kleen removed four underground waste storage tanks (UST's) at the Hebron facility. Although Safety-Kleen removed a significant amount of visibly stained soils for off-site disposal, the presence of groundwater made further excavation extremely difficult. The laboratory analyses indicate that Safety-Kleen was unable to demonstrate a clean closure for the underground tank excavation area.

Contamination in the tank excavation area is being addressed in the overall corrective action plan being developed for the overall facility groundwater contamination.

The groundwater monitoring plan for post closure and corrective action can be found in Section 5, Appendix 5-1.

10.3 CORRECTIVE MEASURES PLAN

Safety-Kleen developed a Corrective Measures Plan that was incorporated into the Draft Corrective Measures Study Report, September 1995. Proposed methods of implementing Corrective Measures are presented in Appendix A of the Draft Corrective Measures Study, September 1995. All RFI and CMS documents are incorporated into this permit application by reference.

A description and evaluation of treatment technologies are presented in Section 3 and 4 of the Draft Corrective Measures Study, September 1995. Hazardous liquids recovered from the proposed Corrective Measures (Groundwater Remediation and Soil Vapor Recovery) will be remediated onsite. Recovered Groundwater will be discharged from the site to the Hebron publicly owned treatment works.

Note that Safety-Kleen has replaced the air stripping tower with a low profile stripping unit. Specifications for the unit can be found in the Operations & Maintenance Manual submitted to Ohio EPA. Specifications for the water and soil vapor extraction system can be found in the Operations and Maintenance Procedures for the Soil Vapor Extraction System submitted to Ohio EPA.

Investigative work completed for the design for the Corrective Action Plan was discussed in Section 1 and 2 of Appendix A of the Draft Corrective Measures Study, September 1995.

The groundwater monitoring plan for site-wide corrective action can be found in Section 5, Appendix 5-1.

Operation and Maintenance (O&M) Procedures for specific corrective actions have been developed as part of the program of Corrective Measures Implementation. These plans were presented to the Ohio EPA, Division of Hazardous Waste Management, July 9, 2001.

The projected schedule of implementation of Corrective Measures is listed in the following table (note that the table only extends out for eight (8) years but that these activities will continue until site soils and ground water meet acceptable risk-based cleanup levels):

	Years							
Task	1	2	3	4	5	6	7	8
USEPA approval of CMP	Done							
Final design of recovery	Done							
Construction of SVE system	Done							
Construction of groundwater recovery system	Done							
Operation of SVE system								
Operation of groundwater recovery system								
Groundwater Sampling Analysis	X X	X X	X X	X X	X X	X X	X X	X X
Reporting to Ohio EPA	X X	X X	X X	X X	X X	X X	X X	X X

10.4 ADDITIONAL SITE INVESTIGATION

The purpose of the proposed additional investigation activities was to further characterize the subsurface conditions underlying the Hebron Facility, and evaluate the effectiveness of the approved final remedy. As part of the additional site investigation Safety-Kleen proposed to install three (3) additional temporary piezometers (PZ-3, PZ-4, and PZ-5), three additional shallow groundwater monitoring wells (H-4SR, H-23S, and H-24S), four (4) middle zone wells (H-8M, H-15M, H-20M, and H-22M), three (3) additional deeper monitoring wells (H-1DD, H-8D, and H-20D), and six (6) additional stream gauges (SG-1 through SG-6). The well, piezometer, and stream gauge locations are presented on Figure 10-1. Safety-Kleen completed the additional site investigation activities during the January through June 2006 reporting period and submitted the results to OEPA as part of the Semiannual Progress Report dated August 31, 2006. All other activities previously described under this section have been completed.

10.4.1 2011 STREAM GAUGE REMOVAL AND INSTALLATION

Clean Harbors proposed to cease measuring the stream stage at the location of stream gauges SG-1 through SG-6 and instead take more frequent and more coordinated measurements at the locations of new stream gauges STG-1 through STG-3 in order to provide further information regarding the elevation of surface water in the South Fork of the Licking River. The stream gauges shall consist of stilling wells mounted within concrete anchors and/or driven in to the River bottom. The gauging equipment at the new locations will consist of electronic data logging equipment (transducers) programmed to take routine elevation readings of the river that will be more diagnostic and can be better coordinated with regard to measurements at a very specific time both at other stream stations and with regard to monitoring well measurements. With the new approach, changes that occur in the stream stage will be better defined relative to time, and the interpretation of measurements will not be confused by a stream stage change during the collection of stream stage data. Clean Harbors installed the new stream gauges in November 2010, and included the results as part of routine monitoring activities starting with the first semi annual event in 2011 (June).

The locations of the three new stream gauges were selected to monitor the segments of the river that are most hydraulically connected to shallow groundwater in the contaminant source area and/or are adjacent to groundwater wells. The location of STG-1 (near SG-6) is at the downstream end of the property, and it is also downstream from the seven recovery wells and the shallow on-site monitoring wells. The location of STG-2 is in the Oxbow Channel, near the mid-point between the divergence and confluence with the river, and also close to two of the recovery wells. Since the Oxbow Channel is intermittent and is not always in direct hydraulic connection with the river, the oxbow may have a unique influence on the shallow groundwater potentiometric surface. The location of STG-3 (near SG-3) is upstream from all recovery wells and close to where the Oxbow Channel diverges from the river. The segment of the South Fork of the Licking River between STG-1 and STG-3, including the Oxbow Channel, is the segment that may have the most hydraulic influence on (or be influenced by) the recovery system. This activity was also completed.

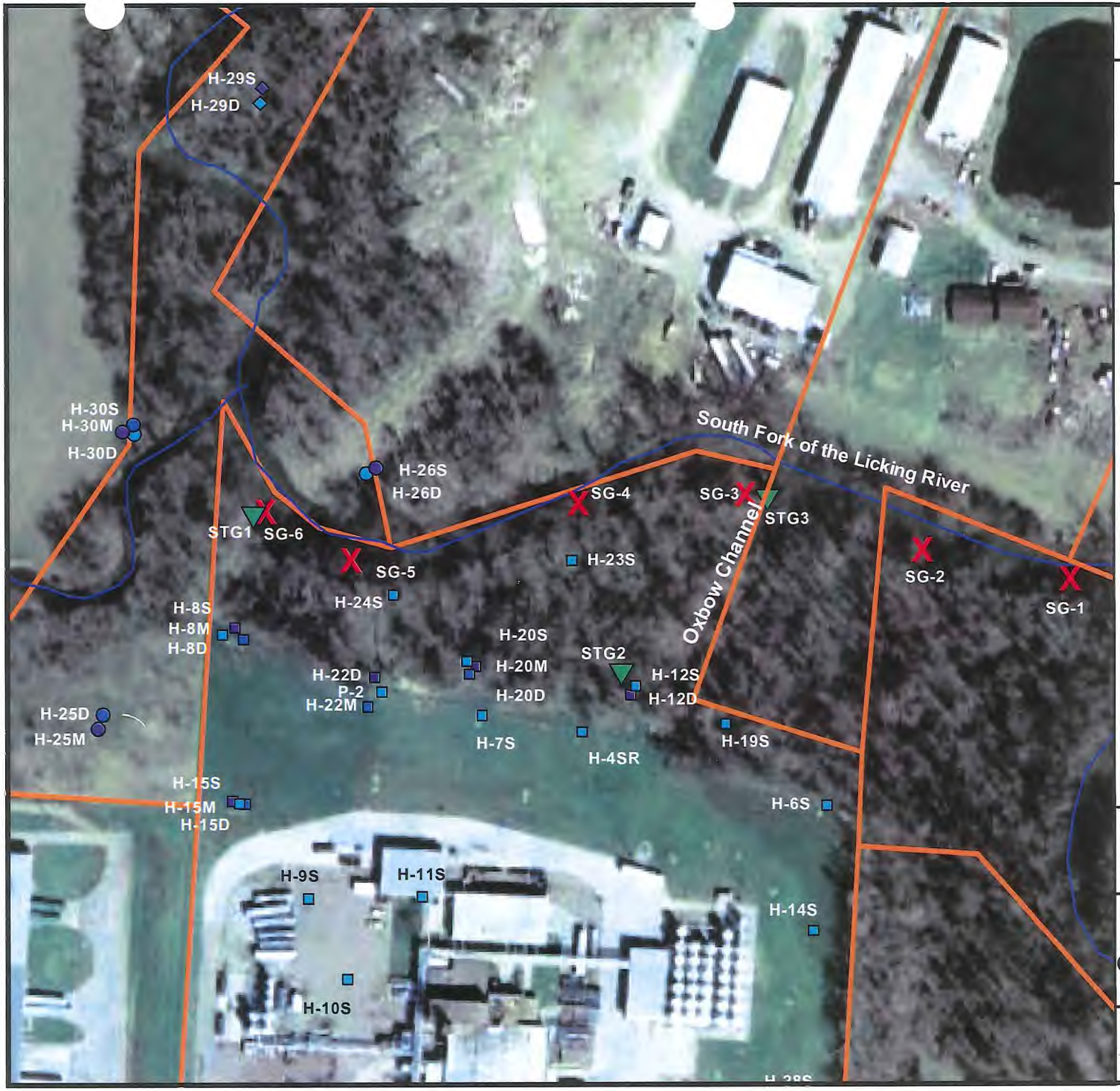

Legend

Scale:

0 feet 175

N

- Stream Gauge Installed Nov 2010
- Shallow GW Monitoring Wells Installed Oct 2010
- Intermediate GW Monitoring Wells Installed Oct 2010
- Deep GW Monitoring Wells Installed Oct 2010
- Shallow GW Piezometer Installed Oct 2010
- Deep GW Piezometer Installed Oct 2010
- Shallow GW Monitoring Wells Installed Prior to 2010
- Intermediate GW Monitoring Wells Installed Prior to 2010
- Deep GW Monitoring Wells Installed Prior to 2010
- Surface Water Body
- Propert Boundaries
- Former Stream Gauges

Clean Harbors Recycling Center Hebron, OH

Figure 10-1: Stream Gauge and Groundwater Monitoring Well Locations

Drawn by: OD
12/08/2010
WellsandGuages.lpk

Leppert Associates

SECTION 11

OTHER STATE AND FEDERAL LAWS

11.1 OTHER STATE AND FEDERAL LAWS 270.14(b)(20), 270.3, AND OAC 3745-50-44(A)(20)

Information will be provided in accordance with the requirements of OAC 3745-50-44(A)(20), 40 CFR 270.14(b)(20), and 270.3 at the request of the Ohio EPA office. Clean Harbors Recycling Services of Ohio, LLC has determined the facility is not governed by any of the following Federal laws: Wild and Scenic Rivers Act, National Historic Preservation Act of 1966, Endangered Species Act, Coastal Zone Management Act, and The Fish and Wildlife Coordination Act.

SECTION 12

CERTIFICATION

I certify under penalty of law that this document and all attachments were prepared under my direction or supervision in accordance with a system designed to assure that qualified personnel properly gather and evaluate the information submitted. Based on my inquiry of the person or persons who manage the system, or those persons directly responsible for gathering the information, the information submitted is, to the best of my knowledge and belief, true, accurate, and complete. I am aware that there are significant penalties for submitting false information, including the possibility of fine and imprisonment for knowing violations.

James Childress
Vice President Environmental Compliance – East
Clean Harbors Environmental Services, Inc.

12-12-14
Date

SECTION 13

SUBPART AA - ORGANIC AIR EMISSIONS FROM PROCESS VENTS

1. INTRODUCTION

Clean Harbors Recycling Services of Ohio, LLC (Clean Harbors or Hebron Facility/Recycle Center) is an organic chemical and solvent recycling facility located at 581 Milliken Drive, S.E., Hebron, Ohio. The Hebron Recycle Center receives, stores and recycle/recovers a wide range of organic waste materials that are listed on the Hazardous Waste Permit Information Form found in Section 1 of the Part B Permit Application.

The Hebron facility is operating as a RCRA TSD facility under a Part B Permit issued by the Ohio Environmental Protection Agency on June 15, 2005.

2. APPLICABILITY – PROCESS VENT REGULATIONS

The Hebron Recycle Center manages various organic chemicals and solvents ranging in concentration up to 100% by weight in the process units listed in Table 1. The nine (9) units listed in Table 1 are subject to the requirements of 40 CFR 264.1030 since the listed units are located at the Hebron Facility, which is subject to the TSD facility standards. The process units are used for the processing of hazardous wastes containing up to 100% by weight organic chemicals, much greater than the 10 ppmw specified in 264.1030(b)

These process vents are also subject to the requirements of 40 CFR 63.690 (Subpart DD – National Emission Standards for Hazardous Pollutants from Off-Site Waste and Recovery Operations). As per 264.1030(e),

> The requirements of this subpart do not apply to the process vents at a facility where the facility owner or operator certifies that all of the process vents that would otherwise be subject to this subpart are equipped with and operating air emission controls in accordance with the process vent requirements of an applicable Clean Air Act regulation codified under 40 CFR part 60, part 61, or part 63. The documentation of compliance under regulations at 40 CFR part 60, part 61, or part 63 shall be kept with, or made readily available with, the facility operating record.

the requirements of 40 CFR 264 Subpart AA would not apply as the facility is currently complying with the requirements of 40 CFR 63 Subpart DD.

3. STANDARDS FOR PROCESS VENTS

Pursuant to the requirements of 40 CFR 63.690 – Standards: Process Vents, Clean Harbors. has connected each process vent through a closed vent system to a control device designed and operated in accordance with 40 CFR 63.693. A Regenerative Fume Oxidizer (RFO) was installed as the control device to reduce the HAP emissions from the process vents by 95 weight percent or more.

Clean Harbors has calculated the organic air emissions from the nine (9) existing process vents at the Hebron facility. The emissions calculations are provided in Attachment 1.

4. CLOSED VENT SYSTEMS AND CONTROL DEVICES

The closed vent system in place at the Hebron Recycle Center is a combination of pressurized duct and vacuum duct. All potential leak interfaces were identified and added to the current monitoring program in place for equipment leaks.

All bypass devices have been equipped with locking devices. The locking devices are inspected monthly to ensure the bypass mechanism is maintained in the closed position.

The RFO has been designed and is operated to maintain the conditions in the combustion chamber at a residence time of 0.5 seconds or longer and at a temperature of 760 deg. C or higher. The applicability of these conditions was demonstrated in a design analysis submitted by Safety-Kleen Systems, Inc. (predecessor to Clean Harbors) in July 2000. In March 2001, the USEPA requested that the Hebron facility conduct a stack test of the RFO (which was completed in August 2001). The latest test was conducted on January 18, 2013. The RFO is equipped with a temperature sensor located in the combustion chamber downstream of the combustion zone. The temperature sensor readings are recorded on a continuous recording device and the daily average temperature calculated by the PLC controller.

Attachment 2 contains information from the design analysis, which shows the process flow and emission estimates from the control device, and the results from the August 2001 stack test.

a. Inspection and Monitoring for Closed Vent System

The closed vent system was initially inspected prior to startup of the RFO. Annually, the closed vent system will be visually inspected and all potential leak interfaces will be monitored in accordance with 40 CFR 63.695(c). Any time a component is repaired or replaced or a connection is unsealed monitoring will be conducted. All leaks or defects detected will be repaired as specified in 40 CFR 63.695(c)(3).

b. Recordkeeping for Closed Vent System

Records shall be maintained in accordance with the requirements of 40 CFR 63.10. Semiannually the following will be recorded: A description of the planned routine maintenance that is anticipated to be performed for the control device during the next 6 months that would require the control device not to meet the requirements of 40 CFR 63.693(f) and a description of the routine maintenance that was performed for the control device during the previous 6 months that required the control device not to meet the requirements of 40 CFR 63.693(f). Additionally, the following information will be recorded: The occurrence and duration of each malfunction of the control device that caused the control device not to meet the requirements of 40 CFR 63.693(f), the duration of each period during a malfunction when vapors vented through the closed-vent system to the control device while the control device is not properly functioning and the actions taken during periods of malfunction to restore a malfunctioning control device to its normal manner of operation.

c. Reporting for Closed Vent System

The following reports shall be submitted to the Administrator: Startup, Shutdown, and Malfunction Report as specified in 40 CFR 63.10(d)(5) and a semi-annual Summary Report as specified in 63.10(e)(3).

5. CONTROL EQUIPMENT SPECIFICATIONS

RFO General Information:

Manufacturer:	John Zink Co.
Type of Unit:	Regenerative Fume Oxidizer
Flowrate (scfm):	16,100
Destruction efficiency:	96%
Ceramic bed volume (cu.ft.):	216

Blower HP:	100
Operating Temperature (deg. F):	1500

TABLE 1

SUMMARY OF PROCESS VENTS SUBJECT TO SUBPART AA

Process Vent Identification	Hazardous Waste Management Unit and Location	Description of Hazardous Waste Stream	EPA Hazardous Waste Code	Estimated Emissions (lb/hr or ton/yr)	Control Device Option
P001	LUWA Thin Film Evaporator No. 1 (Process Area 2100 on Figure 1)	halogenated and non-halogenated waste solvents	see Attachment 3, list of approved hazardous waste codes	5.9 lbs/hr (uncontrolled)	Thermal oxidizer
P002	Washex Still No. 1 (Process Area 2600 on Figure 1)	halogenated and non-halogenated waste solvents	see Attachment 3, list of approved hazardous waste codes	6.4 lbs/hr (uncontrolled)	Thermal oxidizer
P003	Washex Still No. 2 (Process Area 2700 on Figure 1)	halogenated and non-halogenated waste solvents	see Attachment 3, list of approved hazardous waste codes	5.9 lbs/hr (uncontrolled)	Thermal oxidizer
P004	Distillation Column (Process Area 1100 on Figure 1)	halogenated and non-halogenated waste solvents	see Attachment 3, list of approved hazardous waste codes	7.7 lbs/hr (uncontrolled)	Thermal oxidizer
P005	Safety-Therm Drier No. 1 (Process Area 3100 on Figure 1)	halogenated and non-halogenated waste solvents	see Attachment 3, list of approved hazardous waste codes	2.2 lbs/hr (uncontrolled)	Thermal oxidizer
P006	Safety-Therm Drier No. 2 (Process Area 3200 on Figure 1)	halogenated and non-halogenated waste solvents	see Attachment 3, list of approved hazardous waste codes	2.2 lbs/hr (uncontrolled)	Thermal oxidizer
P007	Safety-Therm Drier No. 3 (Process Area 3300 on Figure 1)	halogenated and non-halogenated waste solvents	see Attachment 3, list of approved hazardous waste codes	3.3 lbs/hr (uncontrolled)	Thermal oxidizer
P008	Safety-Therm Drier No. 4 (Process Area 3400 on Figure 1)	halogenated and non-halogenated waste solvents	see Attachment 3, list of approved hazardous waste codes	3.3 lbs/hr (uncontrolled)	Thermal oxidizer
P009	LUWA Thin Film Evaporator No. 2 (Process Area 2200 on Figure 1)	halogenated and non-halogenated waste solvents	see Attachment 3, list of approved hazardous waste codes	11.6 lbs/hr (uncontrolled)	Thermal oxidizer

FIGURE 1

SITE LAYOUT
(Exhibit 2)

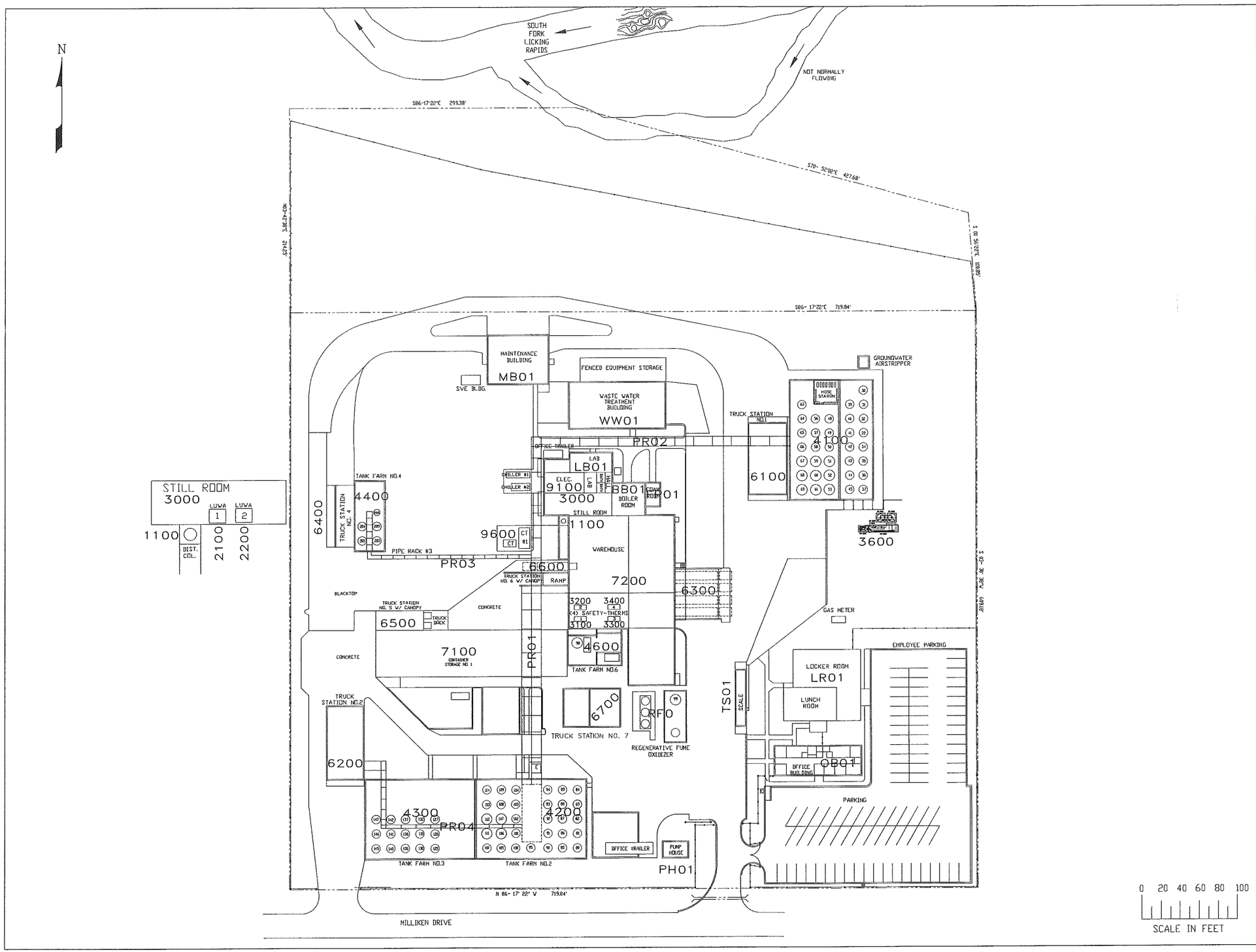

NOTES

PROCESS NUMBERING SYSTEM

1100	DISTILL. COLUMN NO.1
2100	LUWA NO. 1
2200	LUWA NO. 2
3000	STILL ROOM
3100	SAFETY-THERM NO. 1
3200	SAFETY-THERM NO. 2
3300	SAFETY-THERM NO. 3
3400	SAFETY-THERM NO. 4
3600	DEHYDRATION UNIT
4100	TANK FARM NO. 1
4200	TANK FARM NO. 2
4300	TANK FARM NO. 3
4400	TANK FARM NO. 4
4600	TANK FARM NO. 6
6100	TRUCK STATION NO. 1
6200	TRUCK STATION NO. 2
6300	TRUCK STATION NO. 3
6400	TRUCK STATION NO. 4
6500	TRUCK STATION NO. 5
6600	TRUCK STATION NO. 6
6700	TRUCK STATION NO. 7
7100	CONTAINER STORAGE AREA NO. 1
7200	CONTAINER STORAGE AREA NO. 2
9100	ELECTRICL ROOM
9600	COOLING WATER

FACILITY SUPPORT UNIT/AREA LETTERING SYSTEM

BB01	BOILER BUILDING
FP01	FIRE PROTECTION BUILDING
LB01	LABORATORY BUILDING
LR01	LOCKER ROOM
MB01	MAINTENANCE BUILDING
OB01	OFFICE BUILDING
PH01	PUMP HOUSE
PR01	PIPERACK
PR02	PIPERACK
PR03	PIPERACK
PR04	PIPERACK
RFO	REGENERATIVE FUME OXIDIZER
TS01	TRUCK SCALE
WW01	WASTE WATER TREATMENT BUILDING

CONTAINER STORAGE AREAS

STORAGE AREAS 2B, 2D, AND 2E ARE USED FOR STORAGE AND STAGING

STORAGE AREAS TS1 AND TS2 ARE USED FOR STORAGE ONLY

STORAGE AREAS 2C IS USED FOR STAGING ONLY

EXHIBIT 2

NO.	DESCRIPTION	CK.	PROJ.MGR. APPR.	PROCESS APPR.	DATE
4	RCRA PERMIT RENEWAL UPDATE	KMC			12/12/14
3	ADDED DEHYDRATION UNIT & TANK FARM 4100 HOSE STATION	KMC JVC	JVC		10/29/10
2	AS BUILT REVISION	GK			03/07/03
1	ADD RFO/ DELETE HYDRAP.	GK			06/05/00

REVISIONS

PROPRIETARY STATEMENT

THIS DRAWING IS THE EXCLUSIVE PROPERTY OF CLEAN HARBORS AND IS PROPRIETARY AND CONFIDENTIAL INFORMATION. THIS DRAWING AND THE INFORMATION CONTAINED THEREIN MUST NOT BE DUPLICATED, USED, DIVULGED, REPRODUCED, COPIED, DISCLOSED OR APPROPRIATED IN WHOLE OR IN PART FOR ANY PURPOSE OTHER THAN AS EXPRESSLY AUTHORIZED BY CLEAN HARBORS THIS DRAWING MUST BE RETURNED PROMPTLY UPON REQUEST.

FILENAME 624-SP01 EXHIBIT 2 Rev. 4

SITE PLAN

CleanHarbors
501 MILLIKEN DRIVE, HEBRON, OHIO 43025 PHONE (740) 929-3532

SCALE	DRAWN	CHECKED	APPR.	OPERATION APPR	DATE
1"=50'-0"	OARIN S.				6/21/94

RECYCLE CENTER LOCATION
HEBRON, OHIO

DRAWING NO. 624-SP01

REV 4

ATTACHMENT 1

PROCESS VENT AIR EMISSION CALCULATIONS

Process Vent Identification	Hazardous Waste Management Unit	Basis of Emission Estimate Calculation	Estimated Emission (lb/hr uncontrolled)	VOM Destruction Efficiency of Control Device (RFO)	Estimated Emission (lb/hr controlled)
P001	LUWA Thin Film Evaporator No. 1	AP-42 Condenser Emission Estimate (Table 4.7-1)	5.9	97.5%	0.15
P002	Washex Still No. 1	AP-42 Condenser Emission Estimate (Table 4.7-1)	6.4	97.5%	0.16
P003	Washex Still No. 2	AP-42 Condenser Emission Estimate (Table 4.7-1)	5.9	97.5%	0.15
P004	Distillation Column	AP-42 Condenser Emission Estimate (Table 4.7-1)	7.7	97.5%	0.19
P005	Safety-Therm Drier No. 1	AP-42 Condenser Emission Estimate (Table 4.7-1)	2.2	97.5%	0.06
P006	Safety-Therm Drier No. 2	AP-42 Condenser Emission Estimate (Table 4.7-1)	2.2	97.5%	0.06
P007	Safety-Therm Drier No. 3	AP-42 Condenser Emission Estimate (Table 4.7-1)	3.3	97.5%	0.08
P008	Safety-Therm Drier No. 4	AP-42 Condenser Emission Estimate (Table 4.7-1)	3.3	97.5%	0.08
P009	LUWA Thin Film Evaporator No. 2	AP-42 Condenser Emission Estimate (Table 4.7-1)	11.6	97.5%	0.29

ATTACHMENT 2

RFO DESIGN BASIS
&
JANUARY 2013 STACK TEST RESULTS

Clean Harbors Recycling Services of Ohio, LLC
(Previously Safety-Kleen Systems, Inc.)
581 Milliken Drive S.E.
Hebron, Ohio 43025

Emission Control Project
Design Specification

Date: February 22, 2000
Revision D

Table of Contents

1.0 Introduction

2.0 Design Basis
2.1 Dry Clean Waste Volumes
2.2 Emission and Flow Test Data
2.3 Material Balance

3.0 Project Description
3.1 Existing Process Description
3.2 New Process Description
3.3 Process Flow Diagrams
3.4 Piping and Instrumentation Diagram

4.0 Instrumentation
4.1 Control Scheme
4.2 Instrument Alarm, Shutdown, and Interlock List

Appendix I
Attachment I
Attachment II
Attachment III
Attachment IV

Introduction

The Clean Harbors Recycling Services of Ohio, LLC is located at 581 Milliken Drive S.E. in Hebron, Ohio. The process center receives bulk and containerized wastes for solvent recovery, wastewater treatment and transshipment for waste disposal or recovery at other locations. Some of the waste materials processed at Hebron include mineral spirits (ms), perchloroethylene (perc), and methylene chloride (mc). Waste streams managed at the site include dry cleaner filters and sludge, wastewater with trace concentrations of organic chemicals, and part washer solvents. Some of the waste processing equipment includes two thin film evaporators, one distillation column, four rotary vacuum dryers, two vacuum (flash) stills, ninety-four storage tanks, and a biological waste water treatment system. The dry clean waste processing equipment includes a shredder, screw conveyors, metal separators, shaker screens, two drum washing systems and an open top tank (jacuzzi) for collection of sludge.

The purpose of this project was to provide emission control equipment for some of the facilities process vents; primarily the dry clean process, cooker and still room areas. The facility has determined through testing that it exceeds the regulatory limits for hazardous air pollutants (HAPS) and volatile organic chemicals (VOC). The dry clean waste recycling process area is the major contributor of these emissions. The facility currently uses vent condensers to control emissions from its solvent recovery process equipment, however it is required to provide controls for four other major sources by February 2, 2000 in order to satisfy 40 CFR 63.9(b)(2).

Process vents from four unit operations in the dry clean waste recycling area, four from the cooker equipment room, five condenser vents from the solvent recovery equipment, the resin bed dryer, IME, and soil vapor recovery vents were all piped to a suitable exhaust fan that discharges to a control device. The dry clean equipment includes the jacuzzi tank, shredder skip hoist, pre-flush drum washer and drum washer. All four are located in the dry clean processing building and each has individual collection hoods, fans, and discharge stacks. These collection hoods were designed, installed and tested in 1993-1994.

The two thin film evaporators, a distillation column, four rotary vacuum dryers, and two vacuum (flash) stills were operated under vacuum by steam ejectors with the condenser vapors passing through a chilled vent condenser prior to discharge to the atmosphere. The steam ejectors were replaced with vacuum pumps for transfer of gases and vapor. The discharge from those vacuum pumps is directed to the suction of a blower that discharges to an emission control device.

This design specification documents the process design and the detailed engineering drawings and specifications.

2.0 Design Basis

The design basis is detailed in this section.

2.1 Dry Clean Waste Volumes

The projected annual dry clean waste volume is 212,000 containers. There are two categories of waste; sludge and filters. The filter containers are received as single, double, and triple packed filters with one, two or three filters to the container. Total annual dry clean volume is 29,942,380 pounds of waste. Facility operating hours are 24 hours per day, 320 days per year. Approximately 11 MM pounds of perchloroethylene will be reclaimed and sold, and 19 MM pounds will be disposed of in a secure landfill or by thermal destruction off site. All emptied dry clean containers and container lids are processed through drum washers at a rate of approximately 30 containers per hour. The maximum concentration of contaminates in the contaminated air removed from the dry clean waste processing equipment will set the design basis for the project.

2.2 Emission and Flow Test Data

2.2.1 Denton Emission Test Data

Dry clean waste was processed in Denton, Texas at another Safety-Kleen Recycling Facility (predecessor to Clean Harbors) in 1993-1994. The Denton Facility conducted emissions monitoring in November 1994. Attachment I in Appendix I summarizes the emission rates measured. A copy of the test report is provided in Appendix I. The lid washer is similar to the Hebron drum washer and the dump station is actually the jacuzzi tank. Attachment I shows the average gas conditions and emission rates based on three samples collected. The maximum emission rate measured for the three test runs is also given.

2.2.2 Hebron Flow Test Data

In October 1994 the Hebron Facility measured airflow rates and velocities of in its collection hoods and discharge stacks. This data is summarized on Attachment I in Appendix I. The a copy of the test report is provided in Appendix I. The flow rates for the vacuum pumps and other fans were provided from equipment specifications and flow curves.

2.2.3 Hebron Emission Test Data

In January 1998 the Hebron Facility conducted emission stack tests on its dry clean unit operations. Attachment I in Appendix I shows the average gas conditions and emission rates based on three samples collected. The maximum emission rate measured for the three test runs is also given.

2.2.4 Condenser Vent / Vacuum Pump Emission Rates

The existing steam ejectors used for pulling vacuum on the solvent recovery equipment will be replaced with vacuum pumps. The emissions from the resin bed dryer and facility vacuum pump system will also be vented to the RFO. The estimated flow rate and concentration of contaminates from the vacuum pumps are provided on Attachments II and III in Appendix I.

2.2.5 Contaminated Air Design Basis (Combined Process Vents)

The maximum concentration of contaminates was determined by converting the maximum emission rates (lb./hr) measured at the Denton facility to a normalized flow basis (lb./hr-cfm). Contaminate flow rates were then computed based on the actual volumetric flow rates measured at the Hebron Facility. Attachment IV in Appendix I shows the calculated maximum emission rates from the test data. The maximum concentration of contaminants and the maximum volumetric flow rate set the design basis for the project. This is the input for the control device. The combined process vent flow rate and contaminate concentrations at maximum conditions follow this section.

2.3 Material Balance

A destruction removal efficiency of greater than 95% is required for the control of HAPS. A regenerative fume oxidizer (RFO) was provided as the emission control device for destruction of chlorinated and non-chlorinated hydrocarbons. A wet scrubber was provided for removal of hydrogen chloride formed during combustion.

A flow and pressure drop model was developed to determine the size requirements of the RFO. A maximum and average operating condition was established for sizing. The inputs to the model are based on the maximum and average flow rates and contaminate loading discussed in section 2.25. Combustion products and material and energy balance calculations are also provided following this section. Actual stack testing is scheduled for May 2000. Material flow rates and energy consumption can be verified by recording and monitoring key operating parameters.

(Revision A)

Contaminated Air Design Basis: RFO - Maximum Flow Condition

Hebron Facility Emissions Data

Process Sources	Stack dia.(in.)	Stack Velocity (ft/min.)	Volumetric Flow (acfm)	*Mass Flow (lb/hr)	Volume %H2O	Volume % O2	Stack T (F)	
Drum Prewasher	16	1289	1800	8379	2.5	21	60	
Drum Washer	20	1467	3200	13832	3.5	21	100	
Shredder Skip Hoist	20	2659	5800	26590	2	21	68	
Jacuzzi	16	2220	3100	14212	2	21	68	
IME Vac.Pump/Packing Gland	6	193	420	1926	2	21	68	*
Still Room Vacuum Pump	3	9	20	90	2	21	75	*
Cooker & Resin Bed Vac.Pumps	3	89	195	882	3	21	75	*
Combined Flow Parameters	48	6662	**14535**	**65912**	2	21	74	

Constituent Properties @ 74F

Constituent	MW	Btu/lb	% Cl	% C	% H	% O	% N
Perchloroethylene	165.8	9538	85.5	14.5	0	0	0
Methylene chloride	84.9	13000	83.5	14.1	2.4	0	0
Mineral spirits	138	20633	0	85	15	0	0
Methane	16	23,290	0	75	25	0	0
Air	29	0	0	0	0	23.2	76.8
Water	18	0	0	0	11.11	88.89	0

* Not continuous flows.

Process Sources	**Mass Flow (lb/hr)	Water (lb/hr)	O2(lb/hr)	Perc(lb/hr)	MC(lb/hr)	MS(lb/hr)	N2(lb/hr)	THC (Methane lb/hr)	Total (lb/hr)
Drum Prewasher	8379	128	1910	13	2	1	6331	3.290	8389
Drum Washer	13832	301	3153	30	0.75	1	10452	2.630	13940
Shredder Skip Hoist	26590	326	6062	25	0.103	0.225	20092	3.929	26509
Jacuzzi	14212	174	3240	18.1	0.132	0.458	10739	2.968	14174
Vaccuum Pump/Packing Gland	1926	22	418	2	0.5	0.5	1384	2.000	1829
Still Room Vacuum Pump	90	1	19	0.53	1.2	0.03	64	0.500	87
Cooker Room Vacuum Pump	882	15	186	10	135	10	615	7.000	977
Combined Flow Parameters	**65912**	**980**	**14988**	**99**	**140**	**13**	**49676**	**16**	**65912**

	Flow (acfm)	Mass Flow lb/hr	T (F)
RFO Feed	14535	65912	74

Combined Process Vent Concentrations (Weight Percent)							
Water	O2	Perc	MC	MS	N2	Methane	Total
1.49	22.74	0.15	0.21	0.02	75.37	0.02	100

Size Duct (Combined) to RFO

Set Velocity	**1180**	fpm
Volumetric flow rate	**14535**	acfm
Velocity	242.25	fps
Length	**70**	ft
Calculated pipe diameter	48	inches
Average density	**0.075346**	lb/ft3
Temperature	**73.8570108**	F

Combined Process Vent Mass Feed Rates						
Water (lb/hr)	Chloride (lb/hr)	Oxygen (lb/hr)	Nitrogen (lb/hr)	Carbon (lb/hr)	Hydrogen (lb/hr)	Total (lb/hr)
980	200.97	14988	49676	57.23	9.33	65912

Combined Process Vent Molar Feed Rates						
Water (lbmol/hr)	Chloride (lbmol/hr)	Oxygen (lbmol/hr)	Nitrogen (lbmol/hr)	Carbon (lbmol/hr)	Hydrogen (lbmol/hr)	Total (lbmol/hr)
54.4	5.7	468.4	1773.5	4.8	9.2	2316.0

** Calculated using actual process vent temperature. * Calculated using density at average temperature.

Regenerative Fume Oxidizer – FLOW AND PRESSURE DROP MODEL (MAXIMUM CONDITIONS)

		Process Vent Gas to RFO		Tower (In)(preheat)		Tower (Out)(cooling)		ID Fan		Quench		Scrubber		Stack
	("w.c.)	1.0		0.50		-9.70		-20.4		4.6		4		0.60
barometric pressure	("w.c.)	407.8		407.3		397.1		386.4		411.4		410.4		407.4
temperature	(F)	74.0		1392.0		1625.0		280.0		280.0		115.0		115.0
gas flowrate	(acfm)	14606		55624.2		64230.8		23427.8		22695.8		18917.7		18444.7
gas density	(lb/ft3)	0.0733		0.0211		0.0183		0.0501		0.0517		0.0664		0.0680
mass flow	(lb/hr)	64241		70457		70457		70457		70457		75397		75268
equipment delta P	("w.c.)			10.2		10.2				1.000		3.0		
duct work delta P	("w.c.)		0.50	0.0	0.00		0.50		0.00			0.0		
Fan static pressure	("w.c.)							25.000						

Gas Constant - R 296.9 ("w.c.) (ft3) /(lb mole) (R)

MW of gas 27.6 at quench
MW of gas 28.5 after scrubber
MW of gas 28.5 (lb/lb mole)

barometric pressure 406.8 ("w.c.)

Mass Flow to Regenerative Fume Oxidizer

	Min.Spirits	*C2Cl4*	*CH2Cl2*	*H2O*	*THC*	*Dry AIR*	*CH4*	*Total Feed*	*Total lb mol /lb*
C	85.0	14.5	14.1	0.0	75.0	0.0	75.0	101.4	8.44
H	15.0	0.0	2.4	0.0	25.0	0.0	25.0	27.4	27.08
O2	0.0	0.0	0.0	0.0	0.0	23.2	0.0	14637.1	457.41
N	0.0	0.0	0.0	0.0	0.0	76.8	0.0	48453.9	1729.51
Cl	0.0	85.5	83.5	0.0	0.0	0.0	0.0	126.3	3.56
S	0.0	0.0	0.0	0.0	0.0	0.0	0.0	0.0	0.00
H2O	0.0	0.0	0.0	100.0	0.0	0.0	0.0	965.0	53.56
Ash	0.0	0.0	0.0	0.0	0.0	0.0	0.0	0.0	0.00
TOTAL	100.0	100.0	100.0	100.0	100.0	100.0	100.0	64311.0	2279.56
LB/HR	13.0	50.0	100.0	965.0	22.0	63091.0	**70.0**	64311.0	
BTU/LB	19838.0	2419.0	3250.0	0.0	22900.0	0.0	22900.0		2.811 (MM Btu/hr)
TEMP. F	74.0	74.0	74.0	74.0	74.0	74.0	60.0		43.7 Btu/lb. of waste
									43.7 Btu/total lbs. fed

Stoichiometric Air Required

WASTE HEAT INPUT	2.811 MM BTU/HR	Combustion Air Required			
AIR REQUIRED FOR COMBUSTION	2108 LB/HR	487 ACFM @68 F		Predicted RTO Temperature	
%XS AIR	185.0	Total Combustion Air		1619 F	
TOTAL AIR	6007.8 LB/HR	1343 ACFM @68 F			
AIR HEAT INPUT	0.0580 MM BTU/HR	Heat recovery efficiency of RTO	87.5 %		
WATER FROM COMBUSTION AIR	138 LB/HR	Thermal Recovery Efficiency	90.5 %		
HUMIDITY LBH2O/LBDG	0.0230	RTO Inlet Gas Pre-heat Temp.	1392.0 F		
Wt% O2	23.2				
TOTAL MASS INPUT	70457 LB/HR	Fractional heat loss	0.50		
TOTAL HEAT INPUT	2.869 MM BTU/HR	Net Heat Input	2.87 MMBTU/HR		

Mass & Heat Out RFO

	Lb/HR	*Lb Moles/HR*	*Volume %*	*Hc BTU/HR*	
C	0.00	0.00	0.0	0.00	
H	0.00	0.00	0.0	0.00	
O	0.00	0.00	0.0	0.00	
CO2	371.57	8.44	0.34	2890	
CO	0.00	0.00	0.0	0.00	
O2	15572.59	486.64	19.68	176614	
N2	53067.84	1894.20	76.62	448521	
HCL	129.81	3.56	0.14	1279.63	
Cl	0.00	0.00	0.0	0.00	
S	0.00	0.00	0.0	0.00	
H2O	1315.03	72.99	2.95	20615	
Ash	0.00	0.00	0.00	0.00	
TOTAL	70457	2466	100	0.6	MMBTU/Hr
acfm	23427.8				
scfm @68F	15753.7				
Heat Loss	0.0	MM BTU/Hr	Net Heat Out	0.6	MM Btu/Hr
TEMP.	280.0	F	HCl Dew Point	96.3	F

Mass & Heat Input to Quench			
Off-gas from ID Fan		70457	LB/HR
Vol% O2		19.68	%
Gas Temperature		280.0	F
Hegas in		0.6	MMBTU/Hr
He(gas) =CP*(Ti-To)	B.d.a	1001.0	Btu/lbmol
Qw = (Hvap+Hf-Hi)	(H@f-H@60)	2370.3	Btu/lbmol
Moles of quench water required		274.2	lbmol /hr
Mass flow of quench water		4939.9	lb /hr
Volumetric flow of water required		9.9	gpm
Latent Heat of Vaporization of Water @70F		1060.0	Btu/lb
Humid Heat (lb. mol of b.d. air)		7.7	Btu/lbmol-F
T out quench		150.0	F
Saturation temperature is		115.0	F

Mass & Heat Out Quench						
	Lb/HR	*Lb Moles/HR*		*Volume %*	*He BTU/HR*	
C	0.00	0.00		0.00	0.00	
H	0.00	0.00		0.00	0.00	
O	0.00	0.00		0.00	0.00	
CO2	371.57	8.44		0.31	10539	
CO	0.00	0.00		0.00	0.00	
O2	15572.59	486.64		17.83	392498	
N2	53067.84	1894.20		69.42	1820305	
HCL	129.81	3.56		0.13	2849.38	
Cl	0.00	0.00		0.00	0.00	
S	0.00	0.00		0.00	0.00	
H2O	6254.89	347.19		12.72	385615	
ASH	0.00	0.00		0.00	0.00	
TOTAL	75397	2740		100	2.6	MMBTU/Hr
acfm	18917.7					
scfm @68F	16755					
TEMP. F	115.0					
PRESSURE "w.c.	410.4		HCl Dew Point	138.5	F	

Mass & Heat Input to Scrubber			
Off-gas from quench		75397	LB/HR
Vol. % O2		17.83	%
He Enthalpy		2.6	MMBtu/hr
Gas Temperature		115.0	F
Temp. out scrubber		140	F
Fresh Water Temperature		60.0	F
Recirculated Water		575.0	gpm
Recirculated water temperature		115.0	F
Qw = (Hvap+Hi-Hf)	Recirc. Water	817.7	BTU/lbmol
Hegas@150-Hegas		209.190	BTU/lbmol
Qw = (Hvap+Hi-Hf)	Fresh water	1704	BTU/lbmol
Moles of fresh water for cooling in Scrubber		227.3	lbmol/hr
Mass flow of fresh water to scrubber		4094.8	lb/hr
Fresh Water to Scrubber		8.2	gpm
Total Mass In		80260.5	Lb/hr

Mass & Heat Out Scrubber Sump		
Scrubber blow down water to sewer	8.2	gpm
Water Temperature	115.0	F
Hw	3.556	MM Btu/hr

Mass & Heat Out Stack		
Off-gas from scrubber	18444.7	LB/HR
Vol% O2	18.43	%
Gas Temperature	115.0	F
He gas	2.057	MMBtu/hr

MASS & HEAT OUT STACK

	Lb/HR	*Lb Moles/HR*	*Volume %*	*He BTU/HR*	
C	0.00	0.0	0.00	0.0	
H	0.00	0.0	0.00	0.0	
O	0.00	0.0	0.00	0.0	
CO2	371.57	8.4	0.32	8185.8	
CO	0.00	0.0	0.00	0.0	
O2	15572.59	486.6	18.43	390069	
N2	53067.84	1894.2	71.76	1424399	
HCL	1.30	0.04	0.00	28.4	
Cl	0.00	0.0	0.00	0.0	
S	0.00	0.0	0.00	0.0	
H2O	6254.89	347.2	13.16	301488.9	
ASH	0.00	0.0	0.00	0.0	
TOTAL	75268.2	2736.5	104	2.1	MM BTU/hr
ASCFM	18444.7				
scfm @68F	16726.3				
TEMP. (F)	115.0 F				
PRESSURE ("w.c.)	410.4 "w.c.				
		HCl Dew Point	120.6	F	

Standard Heat Data		
	(350-500)	
Heat loss per sq.ft. of comb. chamber	400.0	Btu/sq.ft.
Spec. heat of ash & salt	0.0	Btu/lb
heat of vaporization H2O	1060.0	BTU/lb
Residence time required	1.0	sec
internal device dimensions per JZ		
Tower 1 diameter	7.94	ft.
Tower 2 diameter	7.94	ft.
Tower 3 diameter	7.94	ft.
Length or height	12.0	ft
Volume of destruction chambers	593.8	ft3
Transition area above two towers	558.5	ft3
Total Minimum Unit Volume	1152.3	ft3
Flowrate @ 1625.0 F	1070.5	ft3/sec.
Calculated Residence time	1.08	seconds

Utility Cost	Consumption/Month	$/Month
Water /Sewer	490 Mgallons	$6,609
$13.50/1000 gallons		
Natural Gas @88.5 %	131 MCF	$442
$3.38/1000 cu.ft		
Electrical		$7,515

Mean Heat Capacity Data

Cp (Btu/lb mol-F)

T(F)	N2	CO2	O2	H2O	HCl	CH4
0	6.94	8.5	6.92	7.93	6.92	8.25
70	6.95	8.68	6.96	7.97	6.93	8.31
150	6.97	8.82	7.00	8.02	6.95	8.57
170.0	6.98	8.86	7.01	8.04	6.96	8.46
180	6.98	8.88	7.02	8.04	6.96	8.67
200	6.96	9	7.03	8.04	6.96	8.42
232	6.99	8.97	7.05	8.08	6.97	8.40
295	10.27	13.28	10.37	11.86	10.27	12.42
1600	7.39	11.53	7.8	9.01	7.29	13.38
1650	7.41	11.59	7.82	9.05	7.30	
1800	7.46	11.75	7.88	9.17	7.33	

Enthalpy

H (Btu/lb mol)

T(F)	N2	CO2	Air	H2O
0	0	0	0	0
60	194.4	243.1	194.6	224.2
70	263.69	330.81	264.07	304.38
77	312.2	392.2	312.7	360.5
100	473.3	597.9	472.7	545.3
140	751.98	969.54	751.62	868.38
150	821.65	1062.45	821.35	949.15
170.0	960.99	1248.27	960.81	1110.69
180	1030.66	1341.18	1030.54	1191.46
200	1170	1527	1170	1353
232	1428	2022	1433	1690
295	1894	2738	1903	2259
300.0	1927	2774	1936	2295
1500	10799	16860	10895	13140
1650	12011	18891	12118	14712
2000	14840	23630	14970	18380

Calculated gas requirement with Maximum Contaminate Loading

Mass Balance

M (Polluted air) + M (methane) = M (exhaust)

Energy Balance

*M(Polluted air)*H(Polluted air) + M(Methane)*H(Methane) + M(Methane)*NHV(Methane)*(1-FL) + (M(perc)*NHV(perc)+M(ms)*NHV+M(mc)*NHV(MC)+M(thc)*NHV(thc))*(1-FL) = M(exhaust)*H (exhaust)*

Solving equations above simultaneously for M(Methane)

M(Methane)= M(polluted air)(H(exhaust)-H(Polluted air)) - M(perc,ms,mc)*(1-FL)*NHV(perc,ms,mc) / (1-FL)*NHV(Methane)-(H(exhaust) - (H(Methane))*

Enter Data in Shaded Boxes

BTU/hr required to burn polluted air	0.337	MM Btu/hr		
M(Methane) = Mass flow rate of Methane	15	lb/hr	6	cfm
M(exhaust air) = Mass flow rate of exhaust air	66913	lb/hr	14870	cfm
M(Polluted air) = Mass flow rate of Pollated air	66898	lb/hr	1115	lb/min
M(perc,ms,mc) = Mass flow rate of perc,ms,mc				
M(perc)	89	lb/hr	1.4833	lb/min
M(ms)	3	lb/hr	0.05	lb/min
M(mc)	142	lb/hr	2.3667	lb/min
M(thc)	16	lb/hr	0.2667	lb/min
NHV(Methane) = Net heating value of methane				
NHV(perc,ms,mc) = Net heating value of perc,ms,mc				
NHV(perc)	1380.2	Btu/lb		
NHV(mc)	2419.4	Btu/lb		
NHV(ms)	21750	Btu/lb		
NHV(methane)	21750	Btu/lb		
FL= fractional heat loss in oxidizer	0.05			
Heat Recovery fraction	0.85			
Mass of Methane required 0.26 lb/min.				
6.09 cfm	19256			
	13928			
	20663			
	23.22			

H(exhaust)= enthalpy of exhaust air	59.57	btu/lb	@295F
H(polluted air)= enthalpy of polluted air	42.3	btu/lb	@74F
H(Methane) = enthalpy of methane	36.35	btu/lb	@70F
Density of methane at 60F and 406.8 "wc	0.0424	lb/ft3	
Density of air at 70F and 406.8 " wc	0.075	lb/ft3	

Find NHV (net heating value)

Dulong's Equation for estimating net heating values

NHV = 14,000 * MC + 45,000*(MH-.125*MO) - 760*MCl + 4500*MS

MC = mass fraction of carbon

MH = mass fraction of hydrogen

MCl= mass fraction of chlorine

MO = mass fraction of oxygen

MS = mass fraction of sulfur

Mass fractions	C	H	Cl	O	S	Total
perc	0.145	0	0.855	0	0	1
mc	0.141	0.024	0.835	0	0	1
ms	0.75	0.25	0	0	0	1
methane	0.75	0.25	0	0	0	1

	NHV (Btu/lb)
perc	1380.2
mc	2419.4
ms	21750
methane	21750

Scrubber Design Calculations

Scrubber Inlet conditions		
Volumetric flow rate	20,241	acfm
Volumetric flow rate (dry gas basis)	19,500	acfm
Density of gas	0.0607	lb/ft3
Temperature of Gas to Scrubber	170	F
Mass flow (lb of b.d.air/hr)	73701	lb/hr
HCl flow	200	lb/hr
Air @170 F		
Humidity	0.2098	lb.H2O/lb.Air
Volume (dry air)	15.875	ft3/lb of dry air
Enthalpy (dry air)	33.196	Btu/lb
Gas Inlet Conditions		
HCL feed rate to scrubber	200.00	lb/hr
H2O in gas	5179	lb/hr
Total gas flowrate	78,880	lb/hr
MW of gas	28.5	lb/lb mol
Receycle Rate (10-15gpm/1000cfm)	304	gpm
Liquid flow rate	151929	lb/hr
Calculate Tower Diameter		
Density of water @140F	61.39	lb/ft3
L/G(dg/dl)exp0.5	0.061	
Packing factor = 24		
Viscosity of water @140F 0.469 cp		
gc= 4.E+08		
Gas mass velocity G	2112	lb/hr-ft2
Area of scrubber	37.34	ft2
Diameter required	6.9	ft.
Delta P	0.25	in. w.c./ft of packing
Liquid mass velocity L	4069	lb/hr-ft2
Calculate Blowdown rate		
Inlet mole fraction of HCl in	0.00198	
Inlet HCl partial pressure	1.5067	mmHg
Outlet HCL mole fraction	0.0000198	
Outlet HCl partial pressure	0.0150669	mmHg
Equilibruium conc. HCl-H2O-Air t 1/2 partial pressure 0.0075 mmHg is	8	% HCl by wt.
HCl removed	198.00	lb/hr
Blow down rate required	4554	lb/hr
	9.10	gpm
Fresh Water Rate		
Evaporative losses	0	gpm
Blowdown Rate	9.10	gpm
Total	9.10	gpm

Height of Packing		
Gm	74.1213	lbmoles/hr
Lm	225.8412	lbmoles/hr
m	0.0000620	
((m*Gm)/Lm)	0.00002035	
y1	0.00198249	
y2	0.00001982	
y2*	0.00000991	
fe. (gas density correction factor)	0.89962955	
G/fe	2348	lb/hr-ft2
y1-y2*	0.00197257	
y2-y2*	0.00000991	
Nog	5.2934	
Hog	1.9	ft
Z, Minimum ft. of packing	10.1	ft
Gas Veloc. in scrubber	542	ft/min.
HCL to scrubber	200.00	lb

Qwater		Gas Flow		Temp.		Make-up water	
(gpm)	(lb/hr)	(ACFM)	(lb/hr)	(F)	(lb/cu.ft)	(gpm)	(lb/hr)
15	7506	20,241	78,880	140	0.0650	9.10	4554.5
8	4003.2	20,241	78,880	140	0.0650	9.10	4554.5

HCl flow	[HCl] Sump	NaOH req	50/25% NaOH	NaOH req	NaCl formed	TDS	Total Liquid Flow	
(lb/hr)	(wt. %)	(lb/hr)	(lb/hr)	(gpm)	lb	(wt.%)	(gpm)	pH
200.00	1.61	218.94	437.88	0.58	319.65	6.56	313	6.72
200.00	2.26	218.94	875.75	1.17	319.65	6.56	313	6.72

Caustic per month: 26062 gallons

3.0 Process Description

This section provides a detailed description of the project.

3.1 Existing Process Description

The Hebron facility currently processes dry clean filters and sludge through four rotary vacuum dryers. Dry clean waste filters are transferred to a shredder skip hoist, shredded, transferred to rotary vacuum dryers, and then processed. Dry clean liquid and sludge containers are emptied into an open top tank (jacuzzi) and then pumped to the rotary vacuum dryers for immediate processing or to a storage tank for processing at a later date. Empty containers are washed through two separate container wash units, before being sent out for re-use.

The dry clean filters are emptied into a shredder skip hoist. The skip hoist elevates approximately fifteen feet inside of a carbon steel housing, rotates, and transfers the filters into the shredder. The shredder skip hoist housing has a push-pull ventilation system. Approximately 600 cfm of fresh air is supplied across the front of the shredder skip hoist housing and 5400 cfm of contaminated air is removed and discharged into the atmosphere through a 20" diameter stack.

The contents of liquid and sludge containers are transferred into an open top tank (jacuzzi). The tank is also fitted with a push-pull ventilation system. Approximately 400 cfm of supply air is introduced across the tank and approximately 2800 cfm is removed through a large slotted hood behind the tank. A small hood located at the end of the tank removes approximately 500 cfm of contaminated air. The flow through the two hoods is combined and 3000 cfm is discharged into the atmosphere through a 16" diameter stack.

Empty containers are washed in two separate wash machines, the pre-flush washer and the drum washer. Both container washing machines require the material handler to place the container upside down onto a roller conveyor. The roller conveyor passes through a enclosed carbon steel housing where warm water is pumped through spray nozzles into the container. The rinse water runs out of the drum and into a sump located beneath the conveyor. A pump located in the sump continuously returns the water to the nozzles. Make up water supplied as needed. The sump water is changed out on a regular basis. Steam is injected into the sump to heat the water. Clean containers and lids are sorted and sent out for re-use. The pre-flush washer fan removes approximately 1800 cfm that is discharged into the atmosphere through a 16" diameter stack. The drum washer fan removes approximately 3000 cfm that is discharged into the atmosphere through a 20" diameter stack.

The process vents in the Cooker room and Still rooms are currently discharged into the atmosphere. Four cookers are vented to a knockout tank and then vented to the atmosphere. Two vacuum flash stills, two thin evaporators and the distillation column from the Still room area are also vented to atmosphere. Steam ejectors are currently used for transporting the vapors and gases from the recovery equipment.

Three other minor sources are the stuffing box from rotary vacuum dryer #2, resin bed dryer and the facility IME vacuum pump system. The stuffing box of the rotary vacuum dryer is enclosed and approximately 50 cfm is vented a small centrifugal fan. The facility IME system is a centralized vacuum system used to remove liquids from sumps and drain boxes at locations throughout the site. The resin bed dryer blower has a maximum flow rate of 175 cfm and only operated approximately twice per month. The maximum flow from the vacuum pump is 320 cfm.

3.2 New Process Description

The collection hoods for the dry clean equipment mentioned above will remain as is. The duct work from the pre-flush drum washer, the drum washer, the jacuzzi tank and skip hoist shredder to their respective exhaust fans was replaced. A mist eliminator pad was installed in the duct between the drum washer and the new exhaust fan. A dust filter was installed between the skip hoist shredder and the new exhaust fan. All existing stacks and exhaust fans were removed and a new centrifugal fan (EF-5001) was installed on the roof of the Dry Clean (Perc.) Processing Building. The discharge of each exhaust hood was piped into a common process vent pipe with all contaminated air transported by a common fan.

The steam ejectors in both the Cooker room and Still room remain in place isolated by a blind with vacuum pumps being used as the primary device for reducing pressure in the recovery equipment. The flash stills and thin film evaporator no. 1 share a vacuum pump (P-2126). The thin film evaporator no. 2 and distillation column share a vacuum pump (P-2127). Rotary vacuum dryer's no. 1, 2, 3 & 4 will share a vacuum pump (P-3126). The vents from the vacuum pumps are combined and vent to the RFO. The IME and resin bed dryer discharge into the RFO. The soil vapor extraction equipment vents to the RFO.

All the above mentioned process vents were combined into a carbon steel vent pipe that discharges to a regenerative fume oxidizer (RFO). An induced draft fan (BL-100) is the prime mover of the process vent gas through the RFO system. The gas exiting the RFO flows through fan BL-100 and into water quench/ packed bed scrubber before being discharged into the atmosphere through a stack fitted on top of the scrubber. The scrubber blow down water is discharged to the POTW. The scrubber blown down must controlled to less than 140 °F and a pH between 6.5 and 8.0. Blow down is discharged based on pH at this time.

The regenerative thermal oxidizer was relocated from the Safety-Kleen (predecessor to Clean Harbors) facility located south of Nashville, Tennessee in Mt. Pleasant, Tennessee. The RFO was designed and built by the John Zink Company, in 1994. The RFO was dissembled, packed and transported to Hebron, Ohio in December 1998. The John Zink company was consulted for verification the existing RFO is adequate for this application.

Detailed information and drawings of the RFO equipment as provided to the Southdown Mt. Pleasant facility are provided in the mechanical and electrical detail design drawings.

3.3 Process Flow Diagrams

Process flow diagrams are provided for the collection and control equipment in this section.

PFD No. 995-PFD-101

3.4 Piping and Instrumentation Diagrams

Piping and Instrumentation Diagrams are provided for the emission collection and control equipment.

P&ID No.	Description
995-PDF-200	Vacuum Pump Exhaust

995-PDF-201	Process Vent Collection-Hoods
995-PDF-202	Regenerative Fume Oxidizer
995-PDF-203	Regenerative Fume Oxidizer
995-PDF-204	Scrubber
995-PDF-205	Caustic Storage and Feed system

4.0 Instrumentation

This section describes the instrumentation to be installed for the project.

4.1 Control Scheme

The control scheme for the exhaust fans, vacuum pumps, RFO and scrubber systems are described in this section.

4.1.1 Exhaust Fans and Vacuum Pumps

The drum washer, pre-flush washer, jacuzzi tank, skip hoist exhaust fan, resin bed dryer blower, and all three vacuum pumps are all manually operated with hand (start or stop) switch controls. The exhaust fan runs continuously unless maintenance work is being performed. The vacuum pumps will run when material is being reclaimed. The IME vacuum pump exhaust runs in automatic and runs whenever there is a change in pressure due to an open valve in the IME system. The cooker stuffing box fan is also operated manually with a hand switch control. The cooker stuffing box exhaust fan is operated when the cooker is processing methylene chloride. A lower explosive limit (LEL), FTD type, analyzer will be installed in the process vent pipe prior to the RFO. A high LEL alarm will initiate isolation of the process vent gas from the RFO.

4.1.2 RFO Burner Control Safeguard

The burner safeguard logic supplied by John Zink uses a combination of relays and a programmable logic controller (PLC). The first requirement in the burner safeguard is to satisfy the system interlocks (see complete list in section 4.2). The system will not run unless all conditions are satisfied. These interlock conditions are hard wired for system shutdown and to the PLC for burner logic. If all interlock alarms are cleared, the system can be operated.

The burner management system requires a mandatory purge cycle prior to ignition of the burner to flush out any combustible materials. After the purge cycle is complete, the trial for ignition may be initiated. The flame scanners in each of the three burners must detect a pilot flame or the system will shutdown gas flow. If the system shuts down due to flame scanner failure, the system must be reset, the purge cycle repeated, and the pilot flame stabilized before the main burner can be started.

After starting the main burner and a short stabilization period, the pilots will turn off and the main burners will release from low fire. The system will be released to temperature control and will begin heating until the set point operating temperature is reached. Process vent exhaust gas can be introduced into the system when the combustion chamber temperature has reached the operating temperature of 1550 F – 1650 F.

4.1.3 Valve Sequencing

The inlet, exhaust and purge valves on each of the packed bed chambers are opened and closed on a timing sequence. The PLC uses a sequence function to handle the valve opening and closing. The sequence sets each valve to an initial position and places all the valves in their correct orientation prior to starting the sequence. The valves then begin to actuate based

on a coded timing sequence. There are nine steps of three different sequences the inlet, exhaust and purge valves actuate through. The sequence is repeated based on timers programmed into the PLC. Each step of the sequence must be completed before the next step can begin. This is accomplished through use of the position switches on the valves. For example, an inlet valve can not open until the exhaust valve for that chamber has been proven closed.

4.1.4 Quench and Scrubber Control Systems

The RFO burner safeguard systems was modified to incorporate the addition of quench and scrubber vessel. The new alarm, automatic shutdown, and interlock points are provided in 4.2.

The quench and scrubber vessel water flow rate and operating temperatures are monitored. The temperature must be below 150 F before the burner management interlock will clear. Emergency water is provided when upset conditions exist.

The scrubber make-up water flow rate, re-circulation water flow rate, operating temperature, pressure differential across the packing, scrubber sump level and pH of the blow down will be monitored. The temperature of the scrubber and the pressure drop across the scrubber must be verified prior to operation of the RFO. All these instruments will be new interlocks to the burner management system.

4.2 Instrument Alarm, Shutdown, and Interlock List

Tag No.	Description	Normal Setpoint	Alarm Setpoint	Interlock	Shutdown
PSL-302	Fuel Gas Pressure Low	15 psig	7 psig	Yes	Yes
PSH-308	Fuel Gas Pressure High	7 psig	9 psig	Yes	Yes
PSL-220	Combination Quench Air Pressure Low	26" w.c.	13" w.c.	Yes	Yes
ZSC-307	Fuel Gas Control Valve Low	0-100 %	0.05	Yes	
ZSC-304	Fuel Gas Block Valve	Closed	Closed	Yes	
ZSC-306	Fuel Gas Block Valve	Closed	Closed	Yes	
ZSC-305	Fuel Gas Vent Valve	Open	Open	Yes	
ZSC-222	Combustion Air Control Valve	Closed	0.15	Yes	
ZSO-222	Combustion Air Control Valve	Open	0.7	Yes	
ZSC-222A	Combustion Air Block Valve	Closed	Closed	Yes	
ZSC-222B	Combustion Air Block Valve	Closed	Closed	Yes	
ZSC-222C	Combustion Air Block Valve	Closed	Closed	Yes	
ZSO-222A	Combustion Air Control Valve	Closed	Open >80%	Yes	
ZSO-222B	Combustion Air Control Valve	Closed	Open >80%	Yes	
ZSO-222C	Combustion Air Control Valve	Closed	Open >80%	Yes	
ZSC-225	Quench Air Control Valve	Closed	Closed	Yes	No
BL-200	Combustion Air Blower	On	Off	Yes	Yes
BL-100	VFD/Induced Draft Fan	On	Off	Yes	Yes
HPP-100	Hydraulic Power Pack	On	Off	Yes	Yes
TSL-113	RTO Temperature Low	1500 F	1350 F	No	Yes
TISHH-11	RTO Temperature High/High	1700 F	1750 F	Yes	Yes
TISH-230	Exhaust Duct Temperature High	350 F	450 F	No	Yes
TISHH-23	Exhaust Duct Temperature High/High	350 F	500 F	Yes	Yes
BSL-100A	Flame Failure		Off	Yes	Yes
BSL-100A	Flame Failure		Off	Yes	Yes
BSL-100A	Flame Failure		Off	Yes	Yes
ESD	Emergency Shutdown		Off		Yes

Tag No.	Description	Normal Setpoint	Alarm Setpoint	Interlock	Shutdown
TAH 9107	Quench Temperature High	160 F	225 F	Yes	Yes
TAH 9207	Scrubber Temperature High	140 F	225 F	Yes	Yes
PAH 9207	Scrubber Pressure Drop	<2.0" w.c.	>3.5" w.c.	No	No
LAH 9207	Scrubber Sump Level High	6 ft	7 ft	Yes	Yes
LAL 9207	Scrubber Sump Level Low	6 ft	7 ft	Yes	Yes
AAH 9207	Scrubber Blowdown pH High	7	8.5	Yes	No
AAL 9207	Scrubber Blowdown pH Low	7	6.5	Yes	No
AAH 1504	LEL High	< 5%	25%	Yes	Yes
FAL 9217	Scrubber Recirculation Flow Low	500	200	Yes	Yes

Appendix I

Design Basis Information

Attachment I

This page is a summary of all the documents available with actual emission or flow rate information

Summary of emissions date from the Denton Texas Facility: November 1, 1994 – November 3, 1994

	Shredder Skip Hoist	Lid Washer	Dump Station
Gas Temperature (F)	81	88	80
Moisture (% Volume)	2.18	3.96	1.97
Oxygen (% dry Volume)	20.9	20.9	20.9
Volumetric flow rate (acfm)	2126	2351	1880
Volumetric flow rate (scfm)	2011	2152	1794

Emission rates:

	Maximum		Average		Maximum		Average		Maximum		Average	
	Lb/hr	Lb/cfm hr	Lb/hr	Lb/scf-hr	Lb/hr	Lb/cfm hr	Lb/hr	Lb/scf-hr	Lb/hr	Lb/cfm hr	Lb/hr	Lb/scf-hr
Freon 113	0.0128	6.02E-06	0.0099	8.205E-08	0.00507	2.156E-06	0.0043	3.33E-08	0.119	6.33E-05	0.0428	4E-07
Methylene Cholride	0.0378	1.78E-05	0.021	1.740E-07	0.00954	4.058E-06	0.00924	7.16E-08	0.0802	4.27E-05	0.0758	7E-07
Mineral Spirits	0.0826	3.88E-05	0.0668	5.536E-07	0.788	3.352E-04	0.498	3.86E-06	0.278	1.48E-04	0.214	2E-06
Perchloroethylene	7.99	3.76E-03	6.53	5.412E-05	16.6	7.061E-03	8.29	6.42E-05	11	5.85E-03	7.81	7.3E-05
1,1,1 - Trichloroethylene	0.00583	2.74E-06	0.0512	4.243E-07	0.0054	2.297E-06	0.00523	4.05E-08	0.00515	2.74E-06	0.00441	4.1E-08
Total Hydrocarbons	1.44	6.77E-04	1.22	1.011E-05	2.15	9.145E-04	1.99	1.54E-05	1.8	9.57E-04	1.34	1.2E-05

October 25, 1994 Air Balance Report, Hebron Ohio

	Drum Washer EF-1	Shredder Skip Hoist EF-2	Jacuzzi Vat EF-3 Main Hood	Jacuzzi Vat EF-3 Aux. Hood	Pretlush Washer EF-4 North	Pretlush Washer EF-4 Center	Pretlush Washer EF-4 South
Outlet Diameter (in)	20	20	16	6	8	10	8
Free Area (sf)	2.18	2.18	1.395	0.196	0.348	0.545	0.348
Required Flow Rate (cfm)	3000	5400	2700	600	600	300	900
Required Velocity (fpm)	1376	2477	1935	3061	1724	550	2586
Set Velocity (fpm)	1475	2644	1855	2800	1695	545	2644
Measured Flow Rate (cfm)	3215	5764	2588	549	590	297	920
Sum Measured Flow Rate (cfm)			3137		1807		
Sum Required Flow Rate (cfm)			3300		1800		

Information from Title V Permit Application 3/6/96

			Actual Emissions (4380 hrs/yr)			
EPA ID	Description	Process Rate	VOC (TPY)	HAP (TPY)	VOC (PPH)	HAP (TPY)
P010	Shredding System	2.1 MM gallons/yr	14.4	14.3	6.575	6.530
P013	Dry Cleaning Vat	4.3 MM gallons/yr	17.57	17.27	8.023	7.886
Z002	Drum Washing	362,000 drums/yr	19.26	18.39	8.795	8.397

			Actual Emissions (8760 hrs/yr)			
EPA ID	Description	Process Rate	VOC (TPY)	HAP (TPY)	VOC (PPH)	HAP (TPY)
P010	Shredding System	2.1 MM gallons/yr	28.894	28.689	6.597	6.550
P013	Dry Cleaning Vat	4.3 MM gallons/yr	35.1	34.5	8.014	7.877
Z002	Drum Washing	362,000 drums/yr	38.5	36.8	8.790	8.402
		Total (4380)	51.23	49.96		
		Total (8760)	102.49	99.99		

Summary of Emissions from Performance Test on January 15, 1998 (By FBT for Dames & Moore)

	Drum Pre-Washer	Drum Washer		
Gas Temperature (F)	58	93		
Water (% Volume)	2.4	3.3	Mole wt. Dry stack gas	28.64
Oxygen (% dry Volume)	21	21	Stack Mole wt.	28.64
Stack diameter (in)	16.25	24.5		
Stack Area (sf)	1.44	3.27		
Stack gas velocity (fps)	17.3	31.1		
Volumetric flow rate (acfm)	1494	6116		
Volumetric flow rate (scfm)	1454	5516		

Emission rates:

	Maximum		Average		Maximum		Average	
	Lb/hr	Lb/cfm hr	Lb/hr	Lb/scf-hr	Lb/hr	Lb/cfm hr	Lb/hr	Lb/scf-hr
Methylene Cholride	1.39	9.30E-04	0.024	2.75E-07	1.44	2.35E-04	0.1	3.02E-07
Mineral Spirits	0.44	2.94E-04	0.37	4.24E-06	1.15	1.88E-04	0.85	2.57E-06
Perchloroethylene	7.21	4.82E-03	6.33	7.26E-05	7.78	1.27E-03	4.85	1.47E-05
Total Hydrocarbons	2.73	1.83E-03	2.56	2.93E-05	5.02	8.21E-04	3.58	1.08E-05

Attachment II

Vacuum Pump Information

All applications are for the recovery of mineral spirits, perchloroethylene and methylene chloride.
All recovery units have main condensers and vent condensers.
Desire is to pull full vacuum.

	Leakage Rates (cfh)								
Unit Name	Measured	w/SF = 2	Gas Temp (F)	Volume (cf)	Vent Diam. (in)	Vent Area (sf)	Flowrate (cfm)	Pressure (in Hg)	Velocity (fpm)
Washex 1	5.1	10.2	100	23.6	1.5	0.0123	0	29.9	0
Washex 2	23.7	47.4	100	57.9	1.5	0.0123	0	29.9	0
Luwa 1	50.5	101	110	105	2	0.0218	0	29.9	0
Combined		159	105	186.5	2	0.0218	150	29.9	6876

	Leakage Rates (cfh)								
Unit Name	Measured	w/SF = 2	Gas Temp (F)	Volume (cf)	Vent Diam. (in)	Vent Area (sf)	Flowrate (cfm)	Pressure (in Hg)	Velocity (fpm)
Column	0	0	130	150	1.5	0.0123	0	29.9	0
Luwa 2	41.2	82.4	110	114	2	0.0218	0	29.9	0
Combined		82.4	120	264	2	0.0218	150	29.9	6876
Combined vent from the Still Room					**3**	**0.0491**	**300**		**6112**

	Leakage Rates (cfh)								
Unit Name	Measured	w/SF = 2	Gas Temp (F)	Volume (cf)	Vent Diam. (in)	Vent Area (sf)	Flowrate (cfm)	Pressure (in Hg)	Velocity (fpm)
Cooker 1			120	250	2	0.0218	0	29.9	0
Cooker 2	5.6	11.2	120	250	2	0.0218	0	29.9	0
Combined		11.2	120	500	3	0.0491	150	29.9	3056

	Leakage Rates (cfh)								
Unit Name	Measured	w/SF = 2	Gas Temp (F)	Volume (cf)	Vent Diam. (in)	Vent Area (sf)	Flowrate (cfm)	Pressure (in Hg)	Velocity (fpm)
Cooker 3	0	0	120	250	2	0.0218	0	29.9	0
Cooker 4	0	0	120	250	2	0.0218	0	29.9	0
Combined		0	120	500	3	0.0491	150	29.9	3056
Combined vent from the Cooker Room					**3**	**0.0491**	**300**		**6112**
Total of Vacuum Pump Flows to RFO				**1300.5**	**6**	**0.1963**	**600**	**29.9**	**3056**

Washex – vacuum flash stills
Luwa – thin film evaporators
Cooker – rotary vacuum dryers
Column – distillation column

Attachment III

Estimate Vacuum Pump Discharge Concentrations

From Perry's Chemical Engineers Handbook 6Th Edition pg. 3-60

Vapor Pressure Data for Tetrachloroethylene

mmHg	1	5	10	20	40	60	100	200	400	700
T(C)	-20.6	2.4	13.8	26.3	40.1	49.2	61.3	79.3	100	120.8

Vapor Pressure Data for Methylene Chloride

Pabs(psi)	1.38	1.92	2.56	3.38	5.52	8.81	13.25	19.2	26.79	-
Hgas(Btu/lb)	164.4	165.6	166.9	168	170.1	172	173.7	175	176	
T(F)	10	20	30	40	60	80	100	120	140	-

Vacuum Pump Concentration Estimate

At 95 F	vap. press.	60	mmHg	Ratio vap.press/atm	0.079	weight fraction of Perc in vapor
At 95F	vap. press. =	13	psi	Ratio vap. press/atm	0.177	weight fraction of MC in vapor
At 95F	vap. press. =	0.6	mm Hg	Ratio vap. press/atm	0.004	weight fraction of MS in vapor

6.667 acfm air

1357 lb/hr of air

Leakage rate Still Room	400 cfh	
PERC	0.526	lb/hr of perc
MS	0.027	lb/hr of MS
MC	1.179	lb/hr of MC

Leakage rate Cooker Room	400 cfh	
PERC	0.526	lb/hr of perc
MS	0.027	lb/hr of MS
MC	1.179	lb/hr of MC

Resin Bed Dryer	175 cfm	
PERC	0.000	lb/hr of Perc
MC	137.429	lb/hr of MC
MS	0.000	lb/hr of MS

Attachment IV

This page is for determining the best case design basis for the gas stream to the Regenerative Thermal Oxidizer.

Estimate Emissions using Denton Emissions with Hebron Flowrate

	Drum Washer	Shredder Skip Hoist	Jacuzzi Tank	Preflush Washer
Vol. Flow Rate (cfm)	3215	5764	3137	1807
Discharge pressure ("wc)	0.4	0.3	0.21	0.61
Vol. Flow Rate (scfm)	3043	5454	2967	1711

Denton Emission Rates (lb/scf-hr)

	Drum Washer	Shredder Skip Hoist	Jacuzzi Tank	Preflush Washer
MC	7.16E-08	1.74E-07	7.04E-07	7.16E-08
MS	3.86E-06	5.54E-07	1.99E-06	3.86E-06
Perc	6.42E-05	5.41E-05	7.26E-05	6.42E-05
THC	1.54E-05	1.01E-05	1.24E-05	1.54E-05

Predicted Emission Rates (lb/hr) (Denton Emission Rates x Hebron acfm)

	Drum Washer	Shredder Skip Hoist	Jacuzzi Tank	Preflush Washer	Total
MC	0.013	0.057	0.125	0.007	0.203
MS	0.704	0.181	0.354	0.396	1.636
Perc	11.720	17.709	12.926	6.591	48.946
THC	2.813	3.308	2.208	1.582	9.911

Predicted Potential Annual Emissions Using Denton Data

	Emission Rate (lb/hr)	Hours/year	Tons/year
Total VOC	50.582	8760	222
Total HAP	49.149	8760	215
Total VOC	50.582	4380	111
Total HAP	49.149	4380	108

Hebron and Denton Maximum Emission Rates

	Drum Washer		Shredder Skip Hoist		Jacuzzi Tank		Preflush Washer		Lid Washer	
	(lb/hr)	(lb/cfm-hr)	(lb/hr)	(lb/cfm-hr)	(lb/hr)	(lb/cfm-hr)	(lb/hr)	(lb/cfm-hr)	(lb/hr)	(lb/cfm-hr)
MC	1.44	2.354E-04	0.0378	1.778E-05	0.0802	4.266E-05	1.39	9.304E-04	0.00954	4.058E-06
MS	1.15	1.880E-04	0.0826	3.885E-05	0.278	1.479E-04	0.44	2.945E-04	0.788	3.352E-04
Perc	7.78	1.272E-03	7.99	3.758E-03	11	5.851E-03	7.21	4.826E-03	16.6	7.061E-03
THC	5.02	8.208E-04	1.44	6.773E-04	1.8	9.574E-04	2.73	1.827E-03	2.15	9.145E-04

Predicted Emission at Hebron Using Maximum Conditions

	Drum Washer		Shredder Skip Hoist		Jacuzzi Tank		Preflush Washer		Total (lb/hr)
Flow (cfm)	3200		5800		3100		1800		13900
	(lb/hr)	(lb/cfm-hr)	(lb/hr)	(lb/cfm-hr)	(lb/hr)	(lb/cfm-hr)	(lb/hr)	(lb/cfm-hr)	
MC	0.75	2.354E-04	0.103	1.778E-05	0.132	4.266E-05	1.675	9.304E-04	2.66
MS	0.60	1.880E-04	0.225	3.885E-05	0.458	1.479E-04	0.603	3.352E-04	1.89
Perc	22.59	7.061E-03	21.798	3.758E-03	18.138	5.851E-03	12.709	7.061E-03	75.24
THC	2.63	8.208E-04	3.929	6.773E-04	2.968	9.574E-04	3.289	1.827E-03	12.81

Self-Evaluation Engineering Study Test Report

Determination of Hazardous Air Pollutants (HAPs) and Total Gaseous Nonmethane Organic Destruction Efficiencies and Hydrochloric Acid Emissions

Still Room (P001-P002, P004, P009, and P011)
Cooker Room (P005-P008)
Blue Room (P010, P013, and P016)
Dual Bed Hydration Unit (P017)
Loading Rack No. 2 (J003)

EPA Methods 1, 2, 3, 3B, 4, 18, 25, and 26A

Clean Harbors Recycling Services of Ohio LLC
Hebron, Ohio

Date Conducted: January 18, 2013
Job Number: 130112

Prepared by:

Air Compliance Testing, Inc.
PO Box 41156
Cleveland OH 44141-0156
Phone: (800) EPA-AIR1 (372-2471)

Report Date: February 18, 2013

Superior Quality Emission Testing.

Valid Results Guaranteed.

Air Compliance Testing, Inc.

P.O. Box 41156 Cleveland, Ohio 44141
1-800-EPA-AIR1 www.aircomp.com
testing@aircomp.com

February 18, 2013

Susan Sevy
Environmental Compliance Manager
Clean Harbors Recycling Services of Ohio LLC
2900 Rockefeller Ave.
Cleveland, Ohio 44115

Dear Susan:

The following report provides the results of the compliance emission testing conducted on January 18, 2013. These results are a product of the application of the U.S. EPA Stationary Source Sampling Methods listed in 40 CFR Part 60 Appendix A that were in effect at the time of this test. To the best of my knowledge, this report has been checked for completeness, and the results presented are accurate, error-free, legible, and representative of the actual emissions measured during testing.

Please mail one copy of this report along with any other supportive process operating data collected during this test to your local EPA representative. You should also attach a cover letter (on company letterhead) stating the purpose and the outcome of this test. Additionally, you may address, preferably in a timetable format, any obligations or implications that might be necessary to achieve environmental compliance because of the result of this test.

Please do not hesitate to call if you have any questions or concerns about these test results. On behalf of Air Compliance Testing, I would also like to personally thank you for the opportunity to work with you on this testing project and would enjoy the opportunity to work with you again on any additional future testing projects.

Sincerely,

Robert J. Lisy, Jr.
Technical Manager

Table of Contents

	Page
1.0 INTRODUCTION	**2**
1.1 Summary of Test Program	2
1.2 Key Personnel	2
2.0 SUMMARY AND DISCUSSION OF TEST RESULTS	**4 - 5**
2.1 Objectives and Test Matrix	4
2.2 Field Test Changes and Problems	4
2.3 Presentation of Results	5
3.0 PLANT AND SAMPLING LOCATION DESCRIPTIONS	**8 - 9**
3.1 Process Description and Operation	8
3.2 Control Equipment Description	8
3.3 Flue Gas Sampling Locations	8
3.4 Process Sampling Location	9
4.0 SAMPLING AND ANALYTICAL PROCEDURES	**13 - 14**
4.1 Test Methods	13 - 14
4.2 Procedures for Obtaining Process Data	14
5.0 INTERNAL QA/QC ACTIVITIES	**19**
5.1 QA Audits	19
5.2 QA/QC Problems	19
6.0 APPENDIX	**24**
Production and Process Data	
Laboratory Results	
Field Data Sheets	
Calibrations and Certifications	

1.0 INTRODUCTION

1.1 Summary of Test Program

Clean Harbors Recycling Services Of Ohio LLC (Facility ID: 01-45-02-0235), located in Hebron, Ohio contracted Air Compliance Testing, Inc. of Cleveland, Ohio to conduct compliance stack emission testing for their Still Room (P001, P002, P004, P009, and P011), Cooker Room (P005 - P008), Blue Room (P010, P013, and P016), Dual Bed Hydration Unit (P017), and Loading Rack No. 2 (J003). Testing was performed to provide Clean Harbors with emissions information for their internal use. The testing was performed on January 18, 2013.

Table 1.1 displays the emission units in operation during this test event.

Simultaneous sampling was performed at the P001-P002/P004-P011/P013/P016-P017/J003 Regenerative Fume Oxidizer (RFO) Inlet Duct and the P001-P002/P004-P011/P013/P016-P017/J003 RFO/Scrubber Exhaust Stack to determine the Hazardous Air Pollutants (HAPs) destruction efficiency (DE) and the total gaseous nonmethane organic (TGNMO) DE of the RFO associated with P001, P002, P004 - P011, P013, P016-P017, and J003. In addition, sampling was performed at the P001-P002/P004-P011/P013/P016-P017/J003 RFO Exhaust Stack to determine the emissions of hydrochloric acid (HCl). Testing was conducted during operations at or near maximum capacity. During this test, emissions from P001, P002, P004 - P011, P013, P016-P017, and J003 were controlled by an RFO followed by a wet scrubber.

The test methods that were conducted during this test were EPA Methods 1, 2, 3, 3B, 4, 18, 25, and 26A.

1.2 Key Personnel

The key personnel who coordinated this test program (and their phone numbers) were:

Susan Sevy, Environmental Compliance Manager, Clean Harbors, 216-429-2402
Tyson Houchin QSTI, Operations Director, Air Compliance Testing, Inc., 800-372-2471
Chuck Giffels QI, Project Manager, Air Compliance Testing, Inc., 800-372-2471
Brian Isom QI, Project Manager, Air Compliance Testing, Inc., 800-372-2471

Still Room LUWA E-2,3 Thin Film Evaporator (P001) Washex Still 36VS (P002) Fractional Distillation Column (P004) LUWA No. 2 Thin Film Evaporator (P009) Drying Beds (P011)
Cooker Room Safety-Therm Distillation Unit No. 1 (P005) Safety-Therm Distillation Unit No. 2 (P006) Safety-Therm Distillation Unit No. 3 (P007) Safety-Therm Distillation Unit No. 4 (P008)
Blue Room Filter Grinder (P010) Drum Receiving Vat (P013) Drum and Lid Washing (P016)
Dual Bed Hydration Unit (P017)
Loading Rack No. 2 (J003)

Table 1.1 - Emission Unit Table

2.0 SUMMARY AND DISCUSSION OF TEST RESULTS

2.1 Objectives and Test Matrix

The purpose of this test was to determine the HAPs DE and the TGNMO DE of the RFO associated with P001, P002, P004 - P011, P013, P016-P017, and J003 during operations at or near maximum capacity. The purpose of this test was also to determine the emissions of HCl at the P001-P002/P004-P011/P013/P016-P017/J003 RFO/Scrubber Exhaust Stack during operations at or near maximum capacity. Testing was performed to provide Clean Harbors with emissions information for their internal use.

The specific test objectives for this test were to:

Simultaneously measure the concentrations of methylene chloride, tetrachloroethylene, and TGNMO at the P001-P002/P004-P011/P013/P016-P017/J003 RFO Inlet Duct and P001-P002/P004-P011/P013/P016-P017/J003 RFO/Scrubber Exhaust Stack.

Measure the concentration of HCl at the P001-P002/P004-P011/P013/P016-P017/J003 RFO/Scrubber Exhaust Stack.

Simultaneously measure the actual and dry standard volumetric flow rate of the stack gas at the P001-P002/P004-P011/P013/P016-P017/J003 RFO Inlet Duct and P001-P002/P004-P011/P013/P016-P017/J003 RFO/Scrubber Exhaust Stack.

Utilize the above variables to determine the HAPs DE and the TGNMO DE of the RFO associated with P001, P002, P004 - P011, P013, P016-P017, and J003 during operations at or near maximum capacity.

Utilize the above variables to determine the emissions of HCl at the P001-P002/P004-P011/P013/P016-P017/J003 RFO/Scrubber Exhaust Stack during operations at or near maximum capacity.

Table 2.1 presents the sampling and analytical matrix log for this test.

2.2 Field Test Changes and Problems

No field test changes or problems occurred during the performance of this test that would bias the accuracy of the results of this test.

2.3 Presentation of Results

During each run, three (3) sampling trains were utilized at the P001-P002/P004-P011/P013/P016-P017/J003 RFO Inlet Duct and P001-P002/P004-P011/P013/P016-P017/J003 RFO/Scrubber Exhaust Stack to determine the HAPs DE and the TGNMO DE of the RFO associated with P001, P002, P004 - P011, P013, P016-P017, and J003. One sampling train measured the stack gas dry molecular weight and moisture content. A second sampling train measured the stack gas concentration of TGNMO, and a third sampling train measured the stack gas concentrations of methylene chloride and tetrachloroethylene.

An additional sampling train was utilized at the P001-P002/P004-P011/P013/P016-P017/J003 RFO/Scrubber Exhaust Stack to measure the stack gas concentration of HCl.

Table 2.2 displays the HAPs DE and TGNMO DE of the RFO associated with P001, P002, P004 - P011, P013, P016-P017, and J003 during operations at or near maximum capacity.

Table 2.2 also displays the emissions of HCl measured at the P001-P002/P004-P011/P013/P016-P017/J003 RFO/Scrubber Exhaust Stack during operations at or near maximum capacity.

The mass emission rates displayed in Table 2.2 for Runs 1 - 3 at the P001-P002/P004-P011/P013/P016-P017/J003 RFO/Scrubber Exhaust Stack utilize the saturated moisture content values determined for the measured stack gas temperatures and pressures as per Section 4.0, of EPA Method 4. The measured flue gas percent by volume moisture contents were higher than the published saturated values which is indicative of the presence of entrained moisture droplets in the stack gas.

			EPA TEST METHODS UTILIZED						
			M1/M2 (Flow)	M3 (Dry Mol. Wt.)	M3B (O_2/CO_2)	M4 (%H_2O)	M18 (HAPs)	M25 (TGNMO)	M26A (HCl)
Date	Run No.	Sampling Location	Sampling Time / Duration (min)	Sampling Time / Duration (min)	Sampling Time / Duration (min)	Sampling Time / Duration (min)	Sampling Time / Duration (min)	Sampling Time / Duration (min)	Sampling Time / Duration (min)
1/18/2013	1	P001-P002/P004-P011/P013/P016-P017/J003 RFO Inlet Duct	8:00 - 8:10 10	8:15 - 9:31 60	-	8:15 - 9:31 60	8:15 - 9:31 60	8:16 - 9:31 60	-
1/18/2013	2	P001-P002/P004-P011/P013/P016-P017/J003 RFO Inlet Duct	10:05 - 10:10 5	10:15 - 11:20 60	-	10:15 - 11:20 60	10:15 - 11:20 60	10:15 - 11:20 60	-
1/18/2013	3	P001-P002/P004-P011/P013/P016-P017/J003 RFO Inlet Duct	11:45 - 11:50 5	11:50 - 12:53 60	-	11:50 - 12:53 60	11:50 - 12:53 60	12:10 - 13:10 60	-
1/18/2013	1	P001-P002/P004-P011/P013/P016-P017/J003 RFO/Scrubber Exhaust Stack	8:15 - 9:31 60	-	8:15 - 9:31 60	8:15 - 9:31 60	8:15 - 9:31 60	9:03 - 10:03 60	8:15 - 9:31 60
1/18/2013	2	P001-P002/P004-P011/P013/P016-P017/J003 RFO/Scrubber Exhaust Stack	10:15 - 11:20 60	-	10:15 - 11:20 60	10:15 - 11:20 60	10:15 - 11:20 60	10:18 - 11:18 60	10:15 - 11:20 60
1/18/2013	3	P001-P002/P004-P011/P013/P016-P017/J003 RFO/Scrubber Exhaust Stack	11:50 - 12:53 60	-	11:50 - 12:53 60	11:50 - 12:53 60	11:50 - 12:53 60	12:10 - 13:10 60	11:50 - 12:53 60

All times are Eastern Standard Time.

Table 2.1 - Sampling and Analytical Matrix

	P001-P002/P004-P011/P013/P016-P017/J003 RFO Inlet Duct				P001-P002/P004-P011/P013/P016-P017/J003 RFO/Scrubber Exhaust Stack			
	Run 1	Run 2	Run 3	Average	Run 1	Run 2	Run 3	Average
TGNMO Destruction Efficiency (%)	-	-	-	-	**61.69**	**83.44**	**72.15**	**72.43**
TGNMO Mass Emission Rate (lb/hr as carbon)	11.36	10.57	13.40	11.78	4.35	1.75	3.73	3.28
TGNMO Concentration (ppmvd as carbon)	523	513	663	566	225	90	201	172
HAPs Destruction Efficiency (%)	-	-	-	-	**98.13**	**98.27**	**98.80**	**98.40**
Total HAPs Mass Emission Rate (lb/hr)	12.6	28.9	35.9	25.8	0.236	0.499	0.433	0.389
Methylene Chloride Mass Emission Rate (lb/hr)	4.6	3.4	3.1	3.7	0.078	0.053	0.037	0.056
Tetrachloroethylene Mass Emission Rate (lb/hr)	8.1	25.5	32.9	22.1	0.158	0.446	0.396	0.333
Methylene Chloride Concentration (ppmvd)	29.7	23.2	21.7	24.9	0.57	0.38	0.28	0.41
Tetrachloroethylene Concentration (ppmvd)	26.8	89.6	117.7	78.1	0.59	1.66	1.54	1.27
Hydrogen Chloride Mass Emission Rate (lb/hr)	-	-	-	-	0.054	0.101	0.108	0.088
Hydrogen Chloride Concentration (ppmvd)	-	-	-	-	0.92	1.71	1.91	1.51
Stack Gas Average Flow Rate (acfm)	11,494	10,928	10,973	11,132	12,768	12,847	12,316	12,644
Stack Gas Average Flow Rate (scfm)	11,637	11,034	10,905	11,192	11,515	11,583	11,089	11,396
Stack Gas Average Flow Rate (dscfm)	11,615	11,016	10,807	11,146	10,343	10,397	9,927	10,222
Stack Gas Average Velocity (fpm)	932	886	890	902	1,811	1,823	1,747	1,794
Stack Gas Average Static Pressure (in-H_2O)	2.10	1.60	1.90	1.87	-0.18	-0.16	-0.18	-0.17
Stack Gas Average Temperature (°F)	56	56	65	59	115	115	116	115
Stack Gas Percent by Volume Moisture (%H_2O)*	0.19	0.16	0.90	0.42	10.18	10.24	10.47	10.30
Measured Stack Inner Diameter (in)†	47.6 X 47.1	47.6 X 47.1	47.6 X 47.1	47.6 X 47.1	35.95	35.95	35.95	35.95
Percent by Volume Carbon Dioxide in Stack Gas (Dry Basis) (%CO_2)	0.00	0.00	0.00	0.00	0.13	0.23	0.07	0.14
Percent by Volume Oxygen in Stack Gas (Dry Basis) (%O_2)	20.00	20.00	20.00	20.00	18.53	18.50	18.57	18.53
Percent by Volume Nitrogen in Stack Gas (Dry Basis) (%N_2)	80.00	80.00	80.00	80.00	81.33	81.27	81.37	81.32

* Displayed moisture content values at the RFO Exhaust Stack are saturated for their respective stack gas temperature and pressure. See Section 2.3 for details.

† The RFO Inlet Duct was elliptical in shape.

Table 2.2 - Emission Results

3.0 PLANT AND SAMPLING LOCATION DESCRIPTIONS

3.1 Process Description and Operation

Clean Harbors Recycling Services of Ohio LLC provides a variety of recycling, reuse, and reclamation options for hazardous and non-hazardous materials including solvents, chemicals and oil, light bulbs, transformers, and other electrical equipment. The Clean Harbors Ohio recycling facility in Hebron, Ohio, is an Ohio Part B permitted facility that recycles spent industrial solvents. The facility performs solvent distillation on petrochemical and chlorinated solvents, including methylene chloride and tetrachloroethylene. P001, P002, P004 - P011, P013, P016-P017, and J003 were in operation during this test event.

Figure 3.1 depicts the sampling location schematic.

3.2 Control Equipment Description

During this test, emissions from P001, P002, P004 - P011, P013, P016-P017, and J003 were controlled by an RFO followed by a wet scrubber.

3.3 Flue Gas Sampling Locations

3.3.1 - P001-P002/P004-P011/P013/P016-P017/J003 RFO Inlet Duct

The P001-P002/P004-P011/P013/P016-P017/J003 RFO Inlet Duct was elliptical in shape with measured inner diameters of 47.6-inches and 47.1-inches. The stack was oriented in the horizontal plane and was accessed from a temporary scaffolding arrangement. Two (2) 4.0-inch I.D. sampling ports were located 90° apart from one another at a location that met EPA Method 1, Section 11.1.1 criteria. Prior to emissions sampling, the duct was traversed to verify the absence of cyclonic flow. An average yaw angle of 6.9° was measured. Therefore, the sampling location also met EPA Method 1, Section 11.4.2 criteria. During emissions sampling, the stack was traversed for stack gas volumetric flow rate. A single point was utilized to determine the stack gas dry molecular weight, moisture content, and the concentrations of methylene chloride and tetrachloroethylene. A second point, located in an area of average velocity, was utilized to determine the concentration of TGNMO.

3.3.2 P001-P002/P004-P011/P013/P016-P017/J003 RFO/Scrubber Exhaust Stack

The P001-P002/P004-P011/P013/P016-P017/J003 RFO/Scrubber Exhaust Stack had a measured inner diameter of 35.95-inches, was oriented in the vertical plane, and was accessed from a permanent platform. Two (2) 4.0-inch I.D. sampling ports were located 90° apart from one another at a location that met EPA Method 1, Section 11.1.1 criteria. Prior to emissions sampling, the stack was traversed to verify the absence of cyclonic flow. An average yaw angle of 2.5° was measured. Therefore, the sampling location also met EPA Method 1, Section 11.4.2 criteria. During emissions sampling, the stack was traversed for stack gas volumetric flow rate, dry molecular weight, moisture content, and determination of HCl concentration. A single point was utilized to determine the concentrations of methylene chloride and tetrachloroethylene. A second point, located in an area of average velocity, was utilized to determine the concentration of TGNMO.

Figures 3.2 and 3.3 schematically illustrate the traverse point and sample port locations utilized.

3.4 Process Sampling Location

The EPA Reference Test Methods performed did not specifically require that process samples were to be taken during the performance of this testing event. It is in the best knowledge of Air Compliance Testing that no process samples were obtained and therefore no process sampling location was identified in this report.

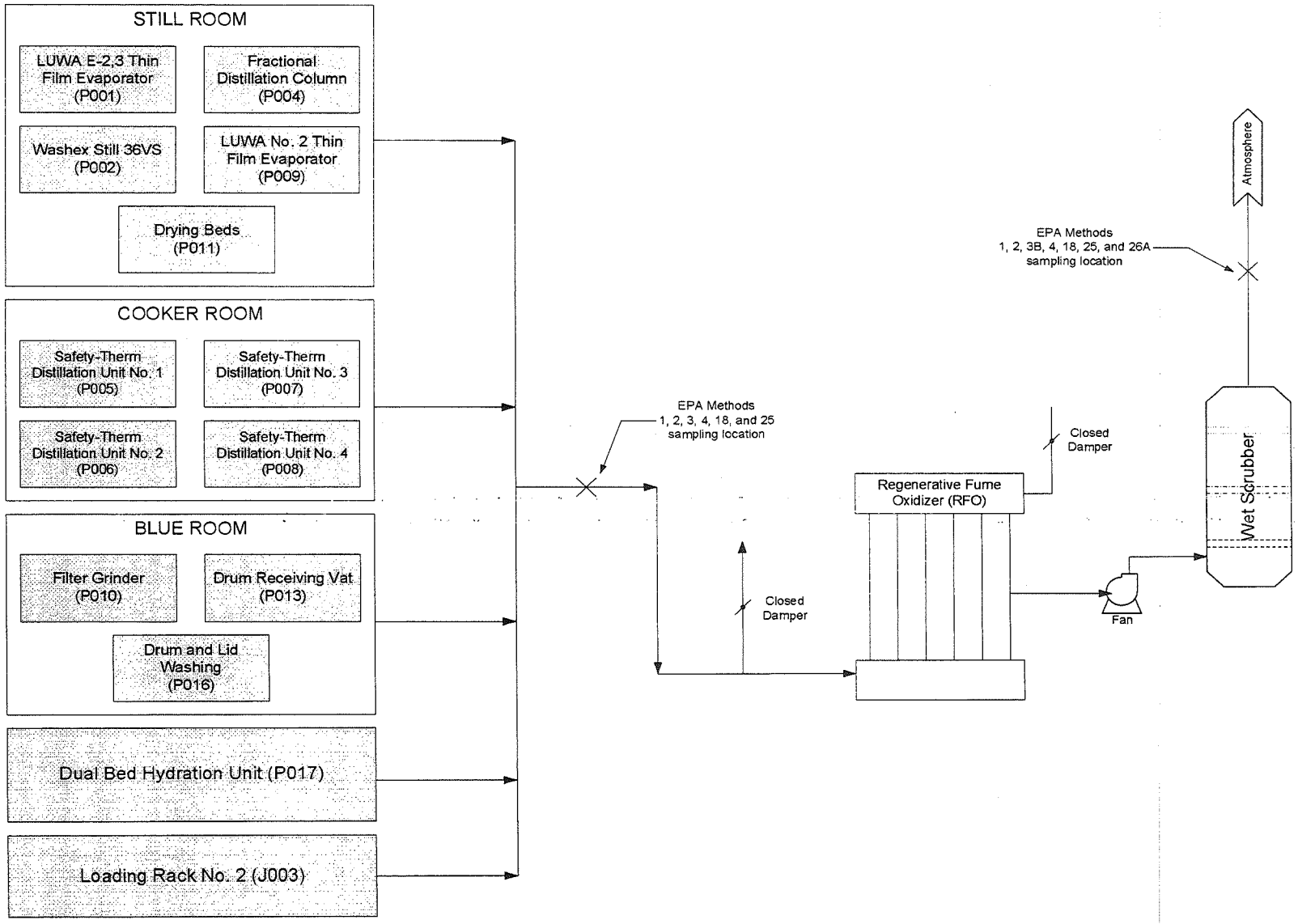

Figure 3.1 - P001, P002, P004 - P011, P013, P016-P017, and J003 Sampling Location Schematic

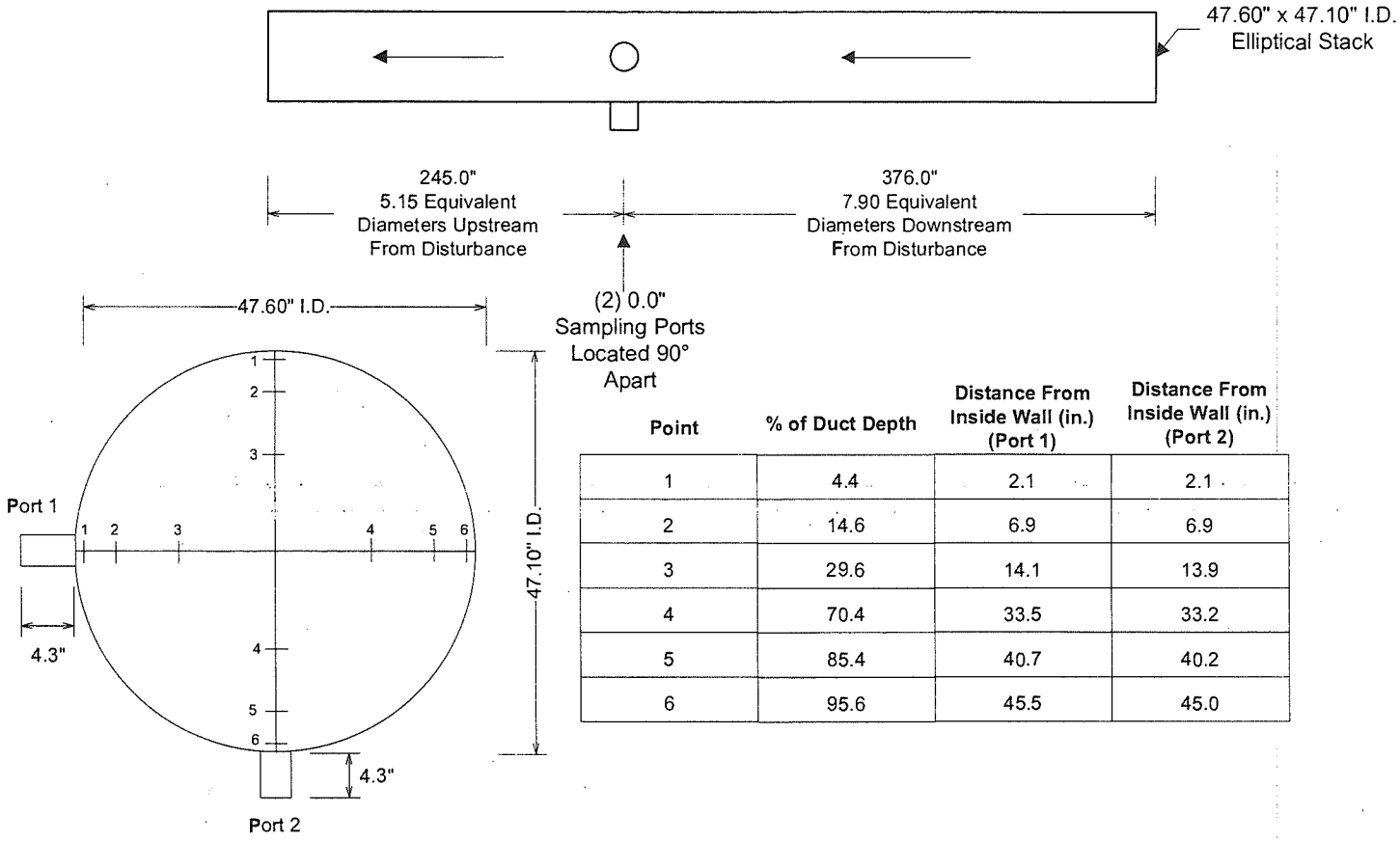

Point	% of Duct Depth	Distance From Inside Wall (in.) (Port 1)	Distance From Inside Wall (in.) (Port 2)
1	4.4	2.1	2.1
2	14.6	6.9	6.9
3	29.6	14.1	13.9
4	70.4	33.5	33.2
5	85.4	40.7	40.2
6	95.6	45.5	45.0

Figure 3.2 - P001-P002/P004-P011/P013/P016-P017/J003 RFO Inlet Duct Traverse Point Location Drawing

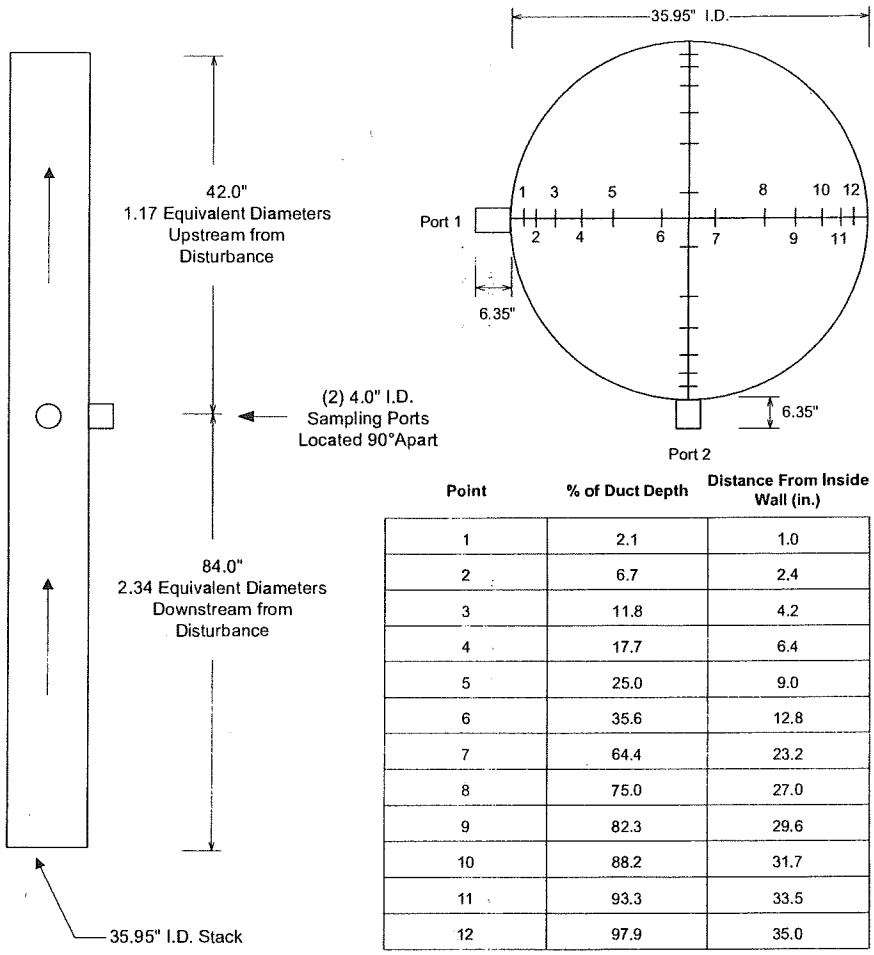

Point	% of Duct Depth	Distance From Inside Wall (in.)
1	2.1	1.0
2	6.7	2.4
3	11.8	4.2
4	17.7	6.4
5	25.0	9.0
6	35.6	12.8
7	64.4	23.2
8	75.0	27.0
9	82.3	29.6
10	88.2	31.7
11	93.3	33.5
12	97.9	35.0

Figure 3.3 - P001-P002/P004-P011/P013/P016-P017/J003 RFO/Scrubber Exhaust Stack Traverse Point Location Drawing

4.0 SAMPLING AND ANALYTICAL PROCEDURES

4.1 Test Methods

4.1.1 EPA Method 1: Sample and Velocity Traverses for Stationary Sources
Principle: To aid in the representative measurement of pollutant emissions and/or total volumetric flow rate from a stationary source, a measurement site where the effluent stream is flowing in a known direction is selected, and the cross-section of the stack is divided into a number of equal areas. A traverse point is then located within each of these equal areas. This method was utilized in its entirety as per the procedures outlined in 40 CFR Part 60, Appendix A.

4.1.2 EPA Method 2: Determination of Stack Gas Velocity and Volumetric Flow Rate (Type S)
Principle: The average gas velocity in a stack is determined from the gas density and from measurement of the average velocity head with a Type S (Stausscheibe or reverse type) pitot tube. This method was utilized in its entirety as per the procedures outlined in 40 CFR Part 60, Appendix A.

4.1.3 EPA Method 3: Gas Analysis for the Determination of Dry Molecular Weight
Principle: A gas sample is extracted from a stack by one of the following methods: (1) single-point, grab sampling; (2) single-point, integrated sampling; or (3) multi-point, integrated sampling. The gas sample is analyzed for percent CO_2, percent O_2, and if necessary, for percent CO. For dry molecular weight determination a Fyrite analyzer will be used for the analysis. This method was utilized in its entirety as per the procedures outlined in 40 CFR Part 60, Appendix A.

4.1.4 EPA Method 3B: Gas Analysis for the Determination of Emission Rate Correction Factor or Excess Air
Principle: A gas sample is extracted from a stack by one of the following methods: (1) single-point, grab sampling; (2) single-point, integrated sampling; or (3) multi-point, integrated sampling. The gas sample is analyzed for percent CO_2, percent O_2, and if necessary, for percent CO. An Orsat analyzer must be used for excess air or emission rate correction factor determination. This method was utilized in its entirety as per the procedures outlined in 40 CFR Part 60, Appendix A.

4.1.5 EPA Method 4: Determination of Moisture Content in Stack Gases
Principle: A gas sample is extracted at a constant rate from the source; moisture is removed from the sample stream and determined either volumetrically or gravimetrically. This method was utilized in its entirety as per the procedures outlined in 40 CFR Part 60, Appendix A.

4.1.6 EPA Method 18: Measurement of Gaseous Organic Compound Emissions by Gas Chromatography (Concentrations assumed less than 10,000 ppm)
Principle: This method is based on separating the major components of a gas mixture with a gas chromatograph (GC) and measuring the separated components with a suitable detector. The retention times of each separated component are compared with those of known compounds under identical conditions. Therefore, the analyst confirms the identity and approximate concentrations of the organic emission components beforehand. With this information, the analyst then prepares or purchases commercially available standard mixtures to calibrate the GC under conditions identical to those of the samples. The analyst also determines the need for sample dilution to avoid detector saturation, gas stream filtration to eliminate particulate matter, and prevention of moisture condensation. This method was utilized in its entirety as per the procedures outlined in 40 CFR Part 60, Appendix A.

4.1.7 EPA Method 25: Determination of Total Gaseous Nonmethane Organic Emissions as Carbon (assumed concentration of organics will be less than 1,000,000 ppm as carbon, and that there will be no chlorinated organic compounds in the stack gas)
Principle: An emission sample is withdrawn from the stack at a constant rate through a heated filter and a chilled condensate trap by means of an evacuated sample tank. After sampling is completed, the TGNMO are determined by independently analyzing the condensate trap and sample tank fractions and combining the analytical results. The organic content of the condensate trap fraction is determined by oxidizing the NMO to CO_2 and quantitatively collecting it in the effluent in an evacuated vessel; then a portion of the CO_2 is reduced to CH_4 and measured by an FID. The organic content of the sample tank fraction is measured by injecting a portion of the sample into a gas chromatographic column to separate the NMO from carbon monoxide (CO), CO2, and CH4; the NMO are oxidized to CO2, reduced to CH4, and measured by an FID. In this manner, the variable response of the FID associated with different types of organics is eliminated. This method was utilized in its entirety as per the procedures outlined in 40 CFR Part 60, Appendix A.

4.1.8 EPA Method 26A: Determination of Hydrogen Halide and Halogen Emissions from Stationary Sources-Isokinetic Method
Principle: This method is applicable for determining emissions of hydrogen halides (HX) [hydrogen chloride (HCl), hydrogen bromide (HBr), and hydrogen fluoride (HF)] and halogens (X_2) [chlorine (Cl_2) and bromine (Br_2)] from stationary sources. This method collects the emission sample isokinetically and is therefore particularly suited for sampling at sources, such as those controlled by wet scrubbers, emitting acid particulate matter (e.g., hydrogen halides dissolved in water droplets). This method was utilized for HCl determination as per the procedures outlined in 40 CFR Part 60, Appendix A.

The sampling trains utilized during this testing project are depicted in Figures 4.1 - 4.4.

4.2 Procedures for Obtaining Process Data

Process data was recorded by Clean Harbors Recycling Services of Ohio LLC personnel utilizing their typical record keeping procedures. Recorded process data was provided to Air Compliance Testing, Inc. personnel at the conclusion of this test event. The process data is displayed in the Appendix.

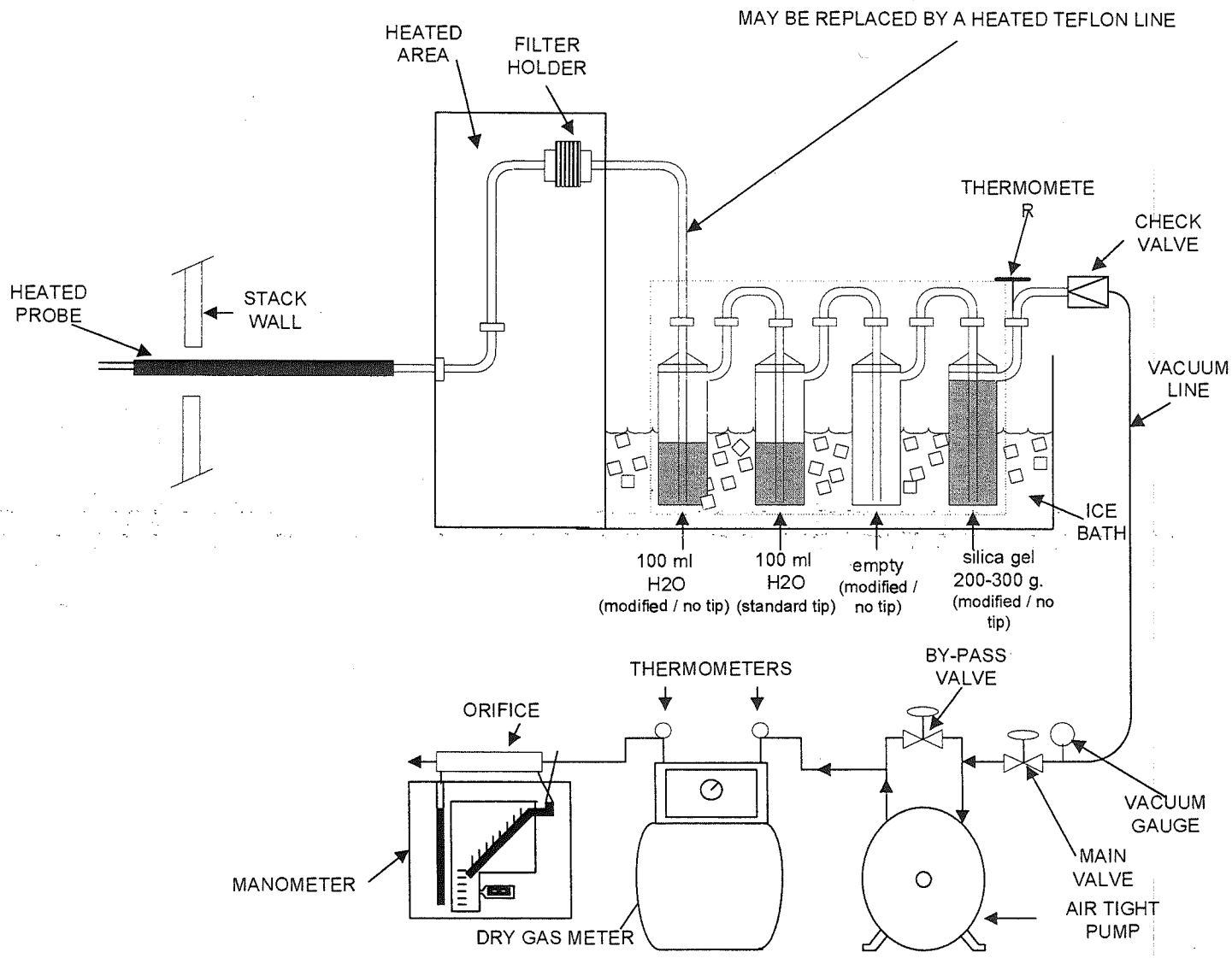

Figure 4.1 - EPA Method 4 Sampling Train Schematic

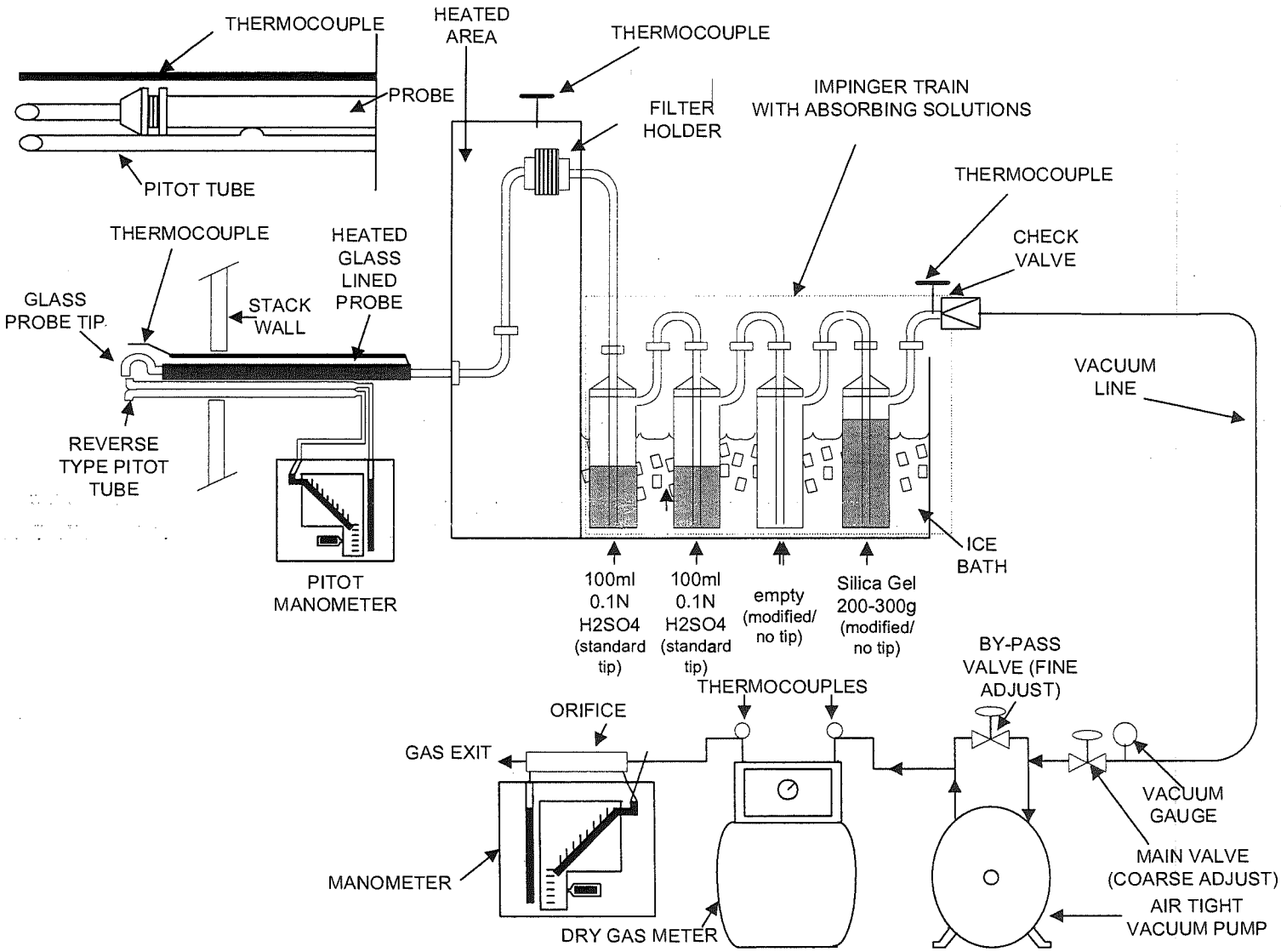

Figure 4.2 - EPA Method 26A Sampling Train Schematic

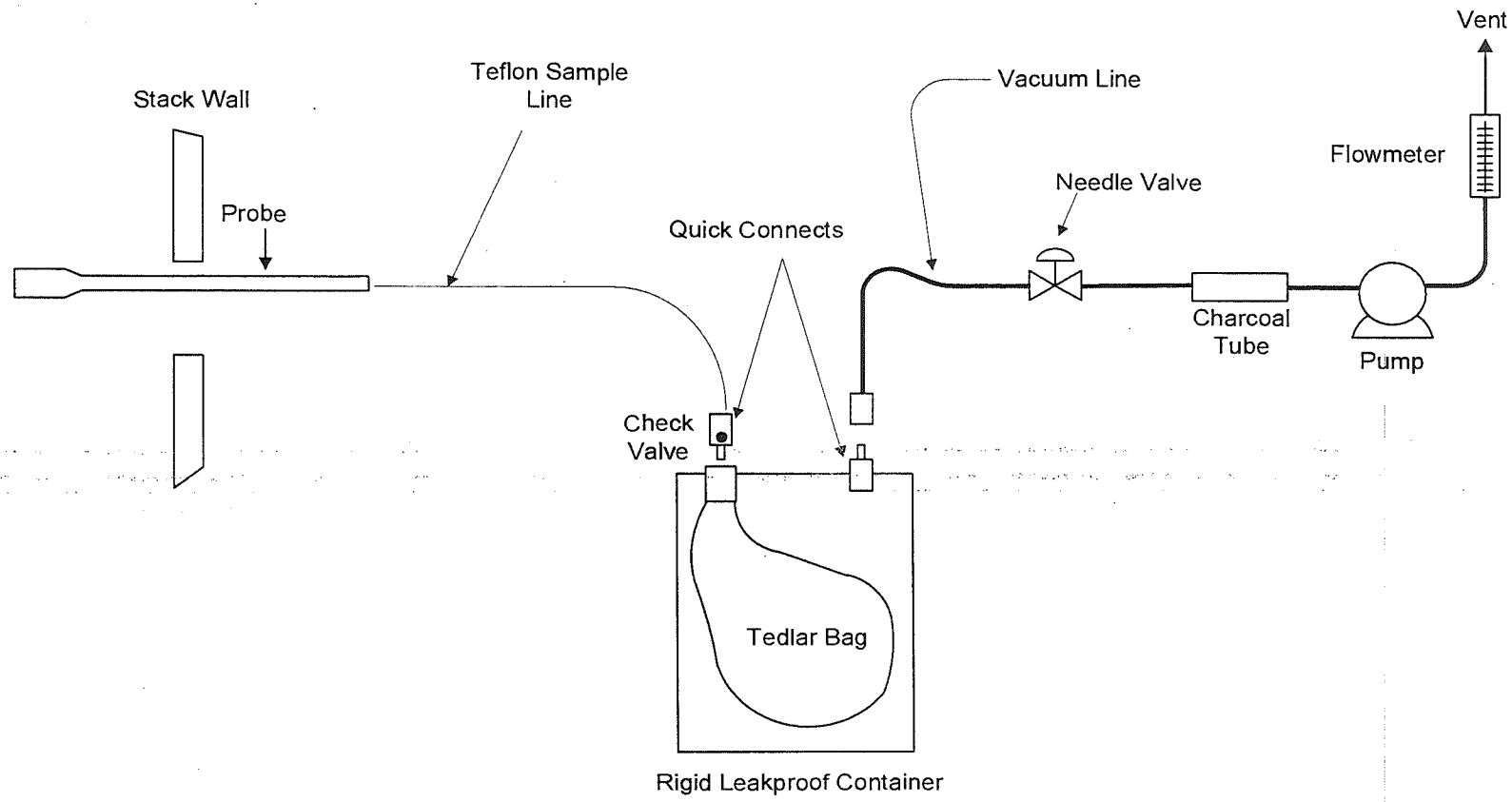

Figure 4.3 - EPA Method 18 Sampling Train Schematic

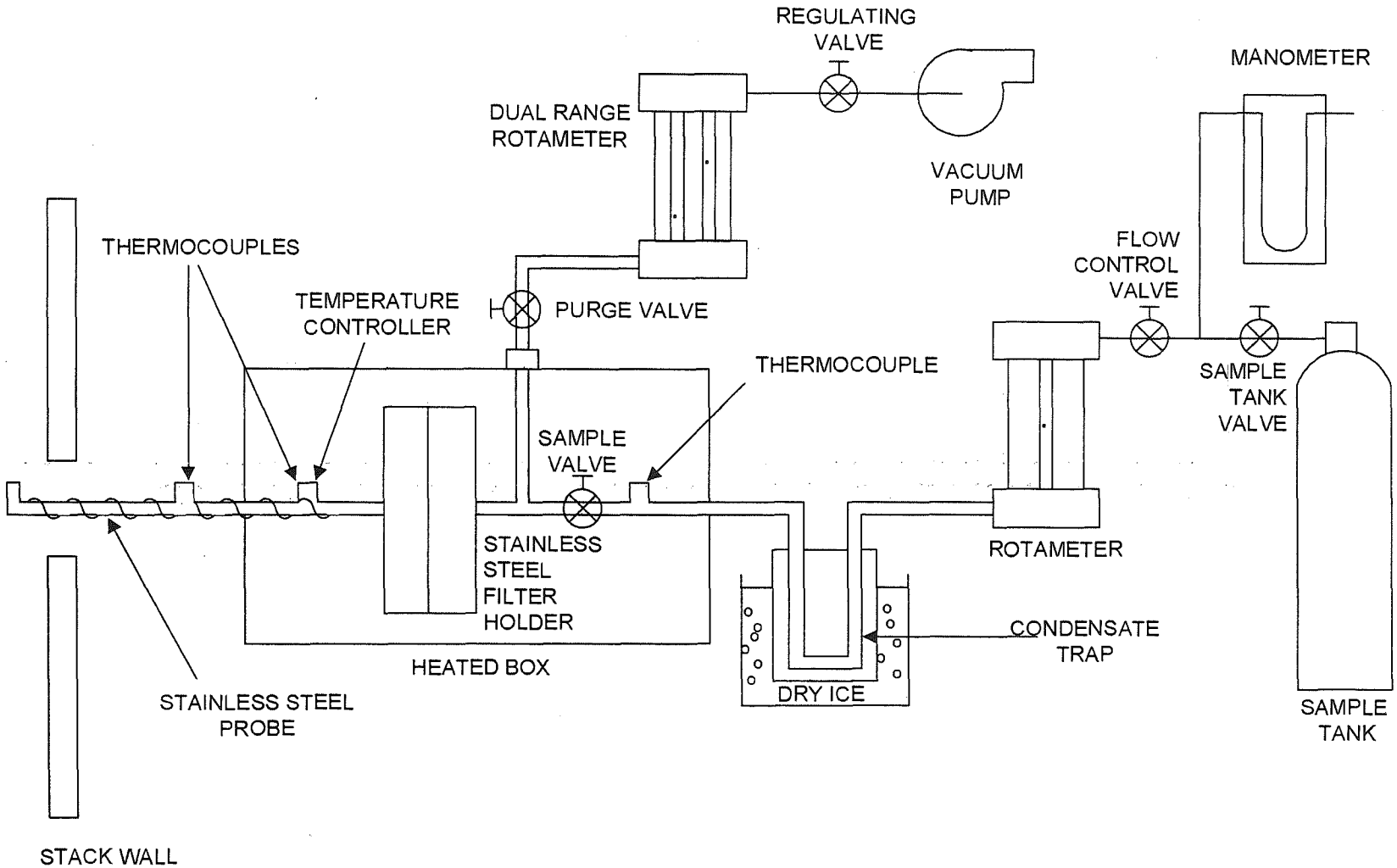

Figure 4.4 - EPA Method 25 Sampling Train Schematic

5.0 INTERNAL QA/QC ACTIVITIES

5.1 QA Audits

Tables 5.1 - 5.4 illustrate the QA audit activities that were performed during this test.

All meter boxes and sampling trains used during sampling performed within the requirements of their respective methods as is shown in Tables 5.1 and 5.2. All pre-test and post-test leak checks were well below the applicable limit. Minimum metered volumes and percent isokinetics were also met where applicable.

Tables 5.3 displays the EPA Method 25 train leak check audit results which were performed prior to each TGNMO concentration run.

Table 5.4 displays the laboratory QA results for the EPA Method 26A samples. The HCl spike recovery of 98.0% was within the normal range of 80% to 120%. All samples were analyzed in duplicate.

5.2 QA/QC Problems

No QA/QC problems occurred during this test event.

	P001-P002/P004-P011/P013/P016-P017/J003 RFO Inlet Duct		
Method 4 Sampling Train	**Run 1**	**Run 2**	**Run 3**
Leak Rate Observed (Pre/Post) (cfm)	0.000 / 0.000	0.000 / 0.000	0.002 / 0.002
Applicable Method Allowable Leak Rate (cfm)	< 0.020	< 0.020	< 0.020
Acceptable	Yes	Yes	Yes
Volume of Dry Gas Collected (dscf)	39.183	37.965	38.040
Recommended Volume of Dry Gas Collected (dscf)	21.000	21.000	21.000
Acceptable	Yes	Yes	Yes

	P001-P002/P004-P011/P013/P016-P017/J003 RFO/Scrubber Exhaust Stack		
Method 26A Sampling Train	**Run 1**	**Run 2**	**Run 3**
Leak Rate Observed (Pre/Post) (cfm)	0.003 / 0.000	0.002 / 0.001	0.002 / 0.003
Applicable Method Allowable Leak Rate (cfm)	< 0.020	< 0.020	< 0.020
Acceptable	Yes	Yes	Yes
Volume of Dry Gas Collected (dscf)	45.549	43.684	41.391
Recommended Volume of Dry Gas Collected (dscf)	21.000	21.000	21.000
Acceptable	Yes	Yes	Yes
Percent of Isokinetic Sampling Rate (%)	102.0	97.3	96.5
Applicable Method Allowable Isokinetic Sampling Rate (%)	100 ± 10	100 ± 10	100 ± 10
Acceptable	Yes	Yes	Yes

Table 5.1 - Sample Train Audit Results Table

P001-P002/P004-P011/P013/P016-P017/J003 RFO Inlet Duct - Method 4 Sampling Train				
Pre-Test Dry Gas Meter Calibration Factor (Y)	Average Post-Test Dry Gas Meter Calibration Check Value (Yqa)	Post Test Dry Gas Meter Calibration Check Value Difference From Pre-Test Calibration Factor (%)	Applicable Method Allowable Difference (%)	Acceptable
0.9941	0.9900	-0.41%	5.00%	Yes

P001-P002/P004-P011/P013/P016-P017/J003 RFO/Scrubber Exhaust Stack - Method 26A Sampling Train				
Pre-Test Dry Gas Meter Calibration Factor (Y)	Average Post-Test Dry Gas Meter Calibration Factor (Y)	Post Test Dry Gas Meter Calibration Factor Difference From Pre-Test Calibration Factor (%)	Applicable Method Allowable Difference (%)	Acceptable
0.9836	1.0004	1.70%	5.00%	Yes

Table 5.2 - Dry Gas Meter Audit Results Table

P001-P002/P004-P011/P013/P016-P017/J003 RFO Inlet Duct			
EPA M25 Sampling Train	Pressure Loss Observed (Pretest) (mm-Hg)	Applicable Method Allowable Pressure Loss (mm-Hg)	Acceptable per Applicable Method (Yes / No)
Run 1	38.0	93.5	Yes
Run 2	37.0	93.5	Yes
Run 3	44.0	93.5	Yes

P001-P002/P004-P011/P013/P016-P017/J003 RFO/Scrubber Exhaust Stack			
EPA M25 Sampling Train	Pressure Loss Observed (Pretest) (mm-Hg)	Applicable Method Allowable Pressure Loss (mm-Hg)	Acceptable per Applicable Method (Yes / No)
Run 1	17.0	93.5	Yes
Run 2	26.0	93.5	Yes
Run 3	15.0	93.5	Yes

Table 5.3 - EPA Method 25 Leak Check Audit Results Table

	HCl
Spike Recovery (%)	98.0
Acceptable per Applicable Method (Yes / No) (Expected Range 75% - 125%)	Yes

Table 5.4 - EPA Method 26A Laboratory Recovery Analysis Results Table

6.0 APPENDIX

Appendix attached.

APPENDIX

to

Self-Evaluation Engineering Study Test Report

Determination of Hazardous Air Pollutants (HAPs) and Total Gaseous Nonmethane Organic Destruction Efficiencies and Hydrochloric Acid Emissions

Still Room (P001-P002, P004, P009, and P011)
Cooker Room (P005-P008)
Blue Room (P010, P013, and P016)
Dual Bed Hydration Unit (P017)
Loading Rack No. 2 (J003)

EPA Methods 1, 2, 3, 3B, 4, 18, 25, and 26A

Clean Harbors Recycling Services of Ohio LLC
Hebron, Ohio

Date Conducted: January 18, 2013
Job Number: 130112

Prepared by:
Air Compliance Testing, Inc.
PO Box 41156
Cleveland OH 44141-0156
Phone: (800) EPA-AIR1 (372-2471)

Report Date: February 18, 2013

Appendix Contents

1-PROCESS DATA

- [x] Process Operational Data

2-LABORATORY DATA

- [x] Laboratory Results

3-FIELD DATA

A	B	Excel Test Data
A	B	Excel Method Specific Data
A	B	Excel Run Data
A	B	Example Calculation
		Test Log (CEMS Methods)
A	B	Main Method Field Data Sheets
		Isokinetic Field Data Sheets
		EPA Method 9 Field Data
A	B	EPA Method 4 and ALT-008 Moisture Recovery
A	B	EPA Method 3 Fyrite/Orsat Field Data
A	B	EPA Method 3 Dry Molecular Weight Calculation
A	B	EPA Method 2 Flow Data Sheets
A	B	EPA Method 1 Cyclonic Flow
A	B	EPA Method 1 Preliminary Field Data

4-CALIBRATIONS AND CERTIFICATIONS

ANALYZER CALIBRATIONS

- [ ] Analyzer Calibration Error
- [ ] Analyzer System Bias and System Drift

EQUIPMENT INSPECTIONS / CALIBRATIONS

- [x] Probe Nozzle Inspections
- [x] Pre-Test Pitot Tube / Probe Inspections
- [x] Post-Test Pitot Tube / Probe Inspections
- [x] Pre-Test Thermocouple System Audit
- [x] Post-Test Thermocouple Check
- [x] 10-Minute Cals
- [x] Pre-Test Meter Box Leak Check
- [x] Pre-Test Dry Gas Meter / Orifice Calibration
- [x] Pre-Test Meter Console Calibration
- [x] Post-Test dry Gas Meter ALT-009 Leak Check
- [ ] Post-Test Dry Gas Meter / Orifice and Console Calibration
- [ ] Post-Test Mini Meter / Orifice and Console Calibration

EQUIPMENT CERTIFICATIONS / HISTORY

- [x] Dry Gas Meter Calibration History
- [x] Aneroid Barometer/ DPG Calibration History
- [ ] Acetone Residuals History
- [ ] Calibration Gas Certifications
- [ ] Calibration Gas Diluter Certifications
- [ ] Reagent Certifications
- [ ] Quartz or Glass Fiber Filter Certification
- [x] True Primary Flow Standard
- [x] Reference Meter Calibration
- [ ] Micromanometer Certificate
- [x] Ω Thermocouple Certificate of Calibration
- [x] Lake Balance (Method 4 and ALT-008)
- [ ] Lake Balance Report for H64 (Gravimetrics)
- [ ] Balance Calibration Weights Certification
- [ ] Balance Calibration History
- [ ] VE Azimuth Tables
- [ ] VE Declination
- [ ] VE Certificates
- [ ] Intent to Test Notification / Test Protocol

Equipment	Time	Gallons	Solvent Processed
LUWA 1	8:15 am -9:31 am	270	Acetone
LUWA 2	8:15 am -9:31 am	71	perchloroethylene
Dist. Column	8:15 am -9:31 am	135	hexanol
Cooker 2	8:15 am -9:31 am	647	n methyl pyrrolidone
Cooker 3	8:15 am -9:31 am	3000 pounds*	perchloroethylene filters
Cooker 4	8:15 am -9:31 am	550	acetone
Blue Room/dumping Perc drums	8:15 am -9:31 am	1430	perchloroethylene
Tanker Tunnel 1	8:15 am -9:31 am	3556.8	loading Acetone
LUWA 1	10:15 am -11:20 am	81	acetone
LUWA 2	10:15 am -11:20 am	71	perchloroethylene
Dist. Column	10:15 am -11:20 am	135	hexanol
Cooker 2	10:15 am -11:20 am	647	n methyl pyrrolidone
Cooker 3	10:15 am -11:20 am	3000 pounds*	perchloroethylene filters
Cooker 4	10:15 am -11:20 am	550	acetone
Blue Room/dumping Perc drums	10:15 am -11:20 am	1155	perchloroethylene
Tanker Tunnel 1	10:15 am -11:20 am	3042	loading Acetone
LUWA 1	11:50 am - 12:53pm	189	
LUWA 2	11:50 am - 12:53pm	71	perchloroethylene
Dist. Column	11:50 am - 12:53pm	135	hexanol
Cooker 2	11:50 am - 12:53pm	647	n methyl pyrrolidone
Cooker 3	11:50 am - 12:53pm	3000 pounds*	perchloroethylene filters
Cooker 4	11:50 am - 12:53pm	550	acetone
Blue Room/dumping Perc drums	11:50 am - 12:53pm	1320	perchloroethylene
Tanker Tunnel 1	11:50 am - 12:53pm	0	no loading

CleanHarbors
RFO DAILY LOG

I:/HEBRON/MAINTENANCE/RFO/DAILYLOG

PARAMETER	UNIT	DATE / TIME	1-10-13 0600	1-11-13 0630	1-12-13 0622	1-13-13 0530	1-14-13 0530	1-15-13 0530	1-16-13 0530	1-17-13 0600	1-18-13 0600	1-19-13
Average Comb. Temp.	°F		1633	1635	1636	1635	1634	1633	1631	1633	1632	1630
RFO On-Line Time	Hrs.		24.0	24.0	24.0	24.0	24.0	24.0	18.5	24.0	24.0	24.0
Hydraulic Level	▶		✓	✓	✓	✓	✓	✓	✓	✓	✓	
Hydraulic Temp.	°F		100	100°	100°	100°	100°	100°	100°	100°	100°	
Scrubber pH			7.1	9.5	6.3	7.1	6.0	5.9	6.1	6.6	8.5	
Scrubber TDS	ppm		31,400	35,000	21500	20,200	21,800	23,100		27,600	35,600	
FI-9317	gpm		1	1	2	2	2	2	2	2	2	
DP-9207	"wc		0	0	0	1	1	1	1	1	1	
Calibr. Gas (cyl/reg)	psig/psig		1800/20	1800/20	1400/20	1400/20	1400/20	1400/20	1800/20	1800/20	2800/20	
West H2 Gas (cyl/reg)	psig/psig		2300/45	2300/45	2300/45	2300/45	2300/45	2300/45	2300/45	2300/45	2300/45	
East H2 (cyl/reg)	psig/psig		700/45	700/45	700/45	700/45	700/45	600/45	600/45	600/45	600/45	
DP-9101	"wc		1	1	1	1	1	1	1	1	1	
LI-9307	Inch		205	199	198	197	196	193	192	191	190	
PI-303	psig		10	10	10	10	10	10	10	10	10	
PI-221	"wc		24	24	24	24	24	24	24	24	24	
EF-5001	Amp		23.3	22.4	22.5	23.0	23.1	23.3	23.6	22	22.4	
LEL Lights & Settings	▶		✓	✓	✓	✓	✓	✓	✓	✓	✓	
Check EF-5001	▶		✓	✓	✓	✓	✓	✓	✓	✓	✓	
Check Chart Paper	▶		✓	✓	✓	✓	✓	✓	✓	✓	✓	
By:	Initials		EF	EF	FW	JO	JO	JO	JO	EF	EF	

pH:	Scrubber water pH (8.5-10.5)	TDS:	Scrubber Water Total Dissolved Solids (approx. 10% or 100,000 ppm)
FI-9317	Blowdown rate to sewer (adjust to control TDS)	DPI-9207	Pressure drop across scrubber packing & demister
DPI-9101	Pressure drop across filter in skip hoist air (on roof)	LI-9307	Level in caustic tank – T-99
PI-303	Gas pressure before auto valves	PI-221	BL-200 pressure
Chart Paper	Should last approx. 30 days		
Avg. Comb. Temp.	Average EIC-113 temp. for the day	RFO On-Line Time	Time BV-601 open (waste gas "ON") for the day

Rev. 4/11/08 (rab)

B-3 RFO OPERATING LOG

DATE: 1-18-13

Clean Harbors, Hebron R/C

RFO Operating Log

Take Readings once every hour

Record any alarms on Alarm & Shutdown Log.

TIME	TISHH-110 °F	TIC-113 °F	PIC-601 "WC	TISH-230 °F	TISHH-231 °F	LIC-9207 INCH	TI-9107 °F	TI-9207 °F	FI-9218 GPM	FI-9217 GPM	BL-100 RPM	LEL %	WASTE GAS ON/OFF	DRAIN POTS 4	INITIALS
01:00	1664	1657	0.7	388	391	43	117	118	100	427	704	6	ON	✓	DW
02:00	1653	1596	0.6	390	399	43	116	117	100	427	704	10	ON	✓	DW
03:00	1655	1639	2.0	389	398	42	116	116	100	427	704	16	ON	✓	DW
04:00	1651	1615	0.6	380	393	43	116	116	100	427	704	9	ON	✓	DW
05:00	1653	1616	0.5	383	395	43	116	117	100	428	704	9	ON	✓	DW
06:00	1654	1615	0.1	396	403	43	117	117	100	428	704	9	ON	✓	DW
07:00	1665	1618	1.4	390	401	43	118	117	100	428	704	8	ON	✓	Smith
08:00	1665	1628	2.2	379	392	42	118	118	100	428	704	10	ON	✓	Smith
09:00	1651	1607	1.4	393	403	42	117	117	100	428	704	8	ON	✓	Smith
10:00	1650	1608	2.1	391	402	42	118	118	100	427	704	7	ON	✓	Smith
11:00	1667	1661	0.7	395	400	42	117	119	100	427	704	7	ON	✓	Smith
12:00	1658	1603	0.6	397	405	43	117	118	100	427	704	7	ON	✓	Smith
13:00	1654	1633	2.1	399	407	43	117	117	100	427	704	7	ON	✓	Smith
14:00	1664	1647	0.3	396	401	43	117	118	100	427	704	7	ON	✓	Smith
15:00	1668	1658	0.7	395	399	43	117	119	100	427	704	7	ON	✓	Smith
16:00	1661	1636	2.2	382	393	43	118	117	100	427	704	7	ON	✓	Smith
17:00	1657	1617	0.1	401	408	43	117	117	100	427	704	7	ON	✓	Smith
18:00	1654	1592	0.5	400	406	43	118	119	100	428	704	7	ON	✓	Smith
19:00	1659	1649	0.6	400	406	43	116	118	100	427	704	7	ON	✓	DW
20:00	1658	1612	2.2	396	403	43	119	119	100	430	704	7	ON	✓	DW
21:00	1662	1650	0.7	388	394	43	118	119	100	428	704	7	ON	✓	DW
22:00	1651	1611	0.4	386	399	43	116	117	100	427	704	7	ON	✓	DW
23:00	1650	1611	0.4	385	398	43	116	117	100	427	704	7	ON	✓	DW
24:00	1656	1678	0.7	393	400	42	116	116	100	427	704	7	ON	✓	DW

TISHH-110	Destruction chamber temperature (below 1850°F)
TIC-113	Temperature of chamber with inlet valve open (1700°F approx.)
PIC-601	Pressure of air inlet manifold (-0.1" approx.)
TISH-230	Temperature in exhaust manifold (280°F approx.)
TISHH-231	Temperature in exhaust manifold (280°F approx.)
Waste Gas	Must normally be "ON"
Drain Pots	Drain at beginning of each shift
LIC-9207	Water level in scrubber (42")
TI-9167	Temperature at scrubber quench outlet (150°F max.)
TI-9207	Temperature inside scrubber, below packing (180°F max.)
FI-9218	Water recirculation rate to quench (60 GPM approx.)
FI-9217	Water recirculation rate through scrubber packing (400 GPM approx.)
BL-100	RPM of I.D. blower
LEL	LEL in ductwork to RFO (25% causes RFO bypass / 50% shuts off burners)

EPA Method-25 Laboratory Report

VRi Job No: M25-1304 **NJDEP Laboratory Certification No. FL018**

Client Name and Sample Receipt Date: ACT-130112, 1/23/13

Sample Recovery and Analysis Date: January 25, 2013 by C.G. Simon

Case Narrative: Authorized signature: Charles G. Simon 1-29-13

This laboratory report is presented in 11 parts. The Introduction is followed by a Summary of Analytical Results, Sample Volumetric Data, Normalized Method 25 Analyzer Daily Calibration Data, Normalized Sample Analysis Data, Raw Method 25 Analyzer Daily Calibration Data, Raw Sample Analysis Data, Sample Chain of Custody with Field Data, Method 25 Calculations, Initial Method 25 Sample Recovery System Performance data, and M25 Calibration Gas Certifications.

The following notes apply to this test series.

1.) Samples were received on January 23, 2013. All tanks and traps were sealed and in good condition.

2.) All lab tank pressure/temperatures were 1-4% lower than field values. This is likely due to a temperature hysteresis effect on the pressure and/or temperature sensors as the field measurements were made near 0°C. For this reason, laboratory values were used in all calculations.

3.) All sample trap purges were stopped when the trap effluent contained <5 ppm CO2 at a flow rate of ~100 ml/min.

4.) All trap recoveries were stopped when the oxidation catalyst effluent contained <10 ppm CO2 at a flow rate of ~100 ml/min.

5.) The Method-25 Sample Recovery System catalyst efficiency was measured as 99.73% prior to sample extraction.

6.) No Method-25 Audit samples were submitted with this set of samples.

7.) Example calculations for one sample are presented on the following page.

Example calculations for sample: M251304-112A-2

Sample Volume

$Vs = (0.38573)(V)[(Pt/Tt) - (Pti/Tti)]$

Where:	V= sample tank volume =	0.006082 m3
	Pt = sample tank pressure after sampling =	591.0 mm Hg
	Tt = sample tank temperature after sampling =	292.04 K
	Pti = sample tank pressure before sampling =	1.0 mm Hg
	Tti = sample tank temperature before sampling =	274.8 K
	Vs = sample volume =	0.004739 m3

Condensable Organics, *Cc* *Note that Cc is defined by Method 25 at 11.2.2 as the sum of CO2 and any NMO measured in the ICV.*

Cc =

$\{[(0.3857)(Vv)(Pf)]/[(Vs)(Tf)]\}\{[1/3][(X_1+X_2+X_3)/DRF_{CO2}+(Y_1+Y_2+Y_3)/DRF_{NMO})]\}$

Where:

Vv = ICV volume =	0.003173 m3		
Pf = ICV final pressure =	1114.6 mm Hg		
Vs= sample volume =	0.004739 m3		
Tf = final ICV temp. =	296.7 K		
$X_{1,2,3}$ = GC area responses for CO2 in the ICV =	381.6	386.4	383.6
DRF_{CO2} = CO2 response factor =	0.9909 area counts/ppmC		
$Y_{1,2,3}$ = GC area responses for NMO in the ICV	<1	<1	<1
DRF_{NMO} = NMO response factor =	1.0016 area counts/ppmC		
Cc = condensable VOC =	**375.9 ppmC**		

Noncondensable Organics

$Ct = \{(Ptf/Ttf)/[(Pt/t)-(Pti/Tti)]\}\{(1/3)(X_1+X_2+X_3)/DRF_{NMO}\}$

Where:

Ptf = final sample tank pressure =	1127.3 mm Hg
Ttf = final sample tank temp. =	296.5 K
Pt = sample tank pres. after sampling =	591.0 mm Hg
Tt = sample tank temp. after sampling =	292.0 K
Pti = sample tank pres. before sampling =	1.0 mm Hg
Tti = sample tank temp. before sampling =	274.8 K
X_1 = 1st GC response, NMO in tank =	73.67 area units
X_2 = 2nd GC response, NMO in tank =	71.98 area units
X_3 = 3rd GC response, NMO in tank =	73.62 area units
'DRF$_{NMO}$ = NMO response factor =	1.0016 area units /ppmC
Ct = Noncondensable VOC =	**137.3 ppmC**

TGNMO Mass Concentration

Where:

$Mc = 0.4993\ (Ct+Cc) = C$

Where:

Ct = Noncondensable VOC =	137.3 ppmC
Cc = condensable VOC =	375.9 ppmC
C = total VOC mass conc. =	**256.2 mgC/m3**

VRi Job No: M25-1304 **NJDEP Laboratory Certification No. FL018**

Client Name and Sample Receipt Date: ACT-130112, 1/23/13

Sample Recovery and Analysis Date: January 25, 2013 by C.G. Simon

Authorized signature: Charles G. Simon 1-29-13

Sample Run and ID	*CO2 ppm	CO ppm	CH4 ppm	TGNMO concentrations in the sample gas: *Ct* Non-condensable @ -78°C, ppmC	*Cc* Condensable @ -78°C, ppmC	*C* Total VOC ppmC	*Mc* Total VOC mgC/dscm
Dehydrator Inlet Duct							
M251304-112A-1	4,839	9	2	70	452	523	260.9
M251304-112A-2	4,902	6	2	137	376	513	256.2
M251304-112A-3	10,636	21	4	106	557	663	330.9
Dehydrator Exhaust Stack							
M251304-112B-1	11,525	72	13	4	221	225	112.5
M251304-112B-2	12,574	80	9	3	87	90	45.1
M251304-112B-3	9,333	75	9	2	200	201	100.6

*CO2 concentrations in the sample tanks *may* not be accurate or directly comparable due to a potential interference of up to ~8,000 ppm from the dry ice used to store and process the samples. This does not affect the VOC results.

VRi Job No: M25-1304

Client Name and Sample Receipt Date: ACT-130112, 1/23/13

Sample Recovery and Analysis Date: January 25, 2013 by C.G. Simon

Sample ID	Vessel	*Vol. (ml)*	*Pti* mm Hg	*Tti* °F	*Tti* K	*LAB Pt* mbar	*LAB Pt* mm Hg	*LAB Tt* °F	*LAB Tt* K	*Ptf & Pf* mbar	*Ptf & Pf* mm Hg	*Ttf & Tf* °F	*Ttf & Tf* K	Vs Sample Volume ml	Analysis Volume ml	Analysis Volume / Sample Volume	Field tank press mbar	Field tank temp °F	% volume difference from lab value
Dehydrator Inlet Duct																			
M251304-112A-1	Tank-172	6,094	1	35	275	726	545	66	292	1,487	1,115	73.8	296	4,374	8,846	2.022	522	36	1.7%
trap-1080	ICV-152	3,175								1,503	1,127	75.0	297	4,374	4,648	1.063			
M251304-112A-2	Tank-195	6,082	1	35	275	788	591	66	292	1,503	1,127	74.0	296	4,739	8,920	1.882	568	36	1.9%
trap-1104	ICV-153	3,173								1,486	1,115	74.3	297	4,739	4,599	0.970			
M251304-112A-3	Tank-171	6,088	0	35	275	840	630	66	292	1,444	1,083	73.3	296	5,066	8,590	1.696	606	36	2.0%
trap-1021	ICV-154	3,172								1,420	1,065	75.0	297	5,066	4,387	0.866			
Dehydrator Exhaust Stack																			
M251304-112B-1	Tank-173	6,069	1	35	275	841	631	66	292	1,463	1,097	69.4	294	5,048	8,740	1.731	602	36	1.2%
trap-1071	ICV-149	3,171								1,666	1,250	71.8	295	5,048	5,177	1.025			
M251304-112B-2	Tank-189	6,097	1	35	275	900	675	66	292	1,442	1,082	72.8	296	5,428	8,599	1.584	663	36	4.2%
trap-1042	ICV-150	3,173								1,419	1,064	75.0	297	5,428	4,385	0.808			
M251304-112B-3	Tank-182	6,091	0	35	275	923	692	66	292	1,434	1,076	74.3	297	5,569	8,519	1.530	667	36	2.2%
trap-1095	ICV-151	3,178								1,460	1,095	74.0	296	5,569	4,528	0.813			

VRi Job No: M25-1304

Client Name and Sample Receipt Date: ACT-130112, 1/23/13

Sample Recovery and Analysis Date: January 25, 2013 by C.G. Simon

Calib. Species	Cal gas conc. ppmC	Response x_1 Normal Area Counts	Response x_2 Normal Area Counts	Response x_3 Normal Area Counts	Mean Response X Normal Area Counts	RF Normal Area Counts/ ppmC	% RSD	Average RF
A -- CO	52.8	52.65	52.84	52.90	52.80	1.0000	0.25	
B -- CO	52.8	53.06	53.20	53.51	53.26	1.0087	0.44	1.0043
A -- CH4	50.9	51.07	51.49	50.14	50.90	1.0000	1.36	
B -- CH4	50.9	49.81	49.91	50.07	49.93	0.9809	0.26	0.9905
A -- CO2	9,920	9,881	9,979	9,900	9,920	1.0000	0.52	
B -- CO2	9,920	9,634	9,788	9,796	9,739	0.9818	0.94	0.9909
A -- NMO	64.8	65.21	65.11	64.08	64.80	1.0000	0.96	
B -- NMO	64.8	64.16	65.96	64.92	65.01	1.0033	1.39	1.0016

CO =	245.8	normalization factors, raw area counts/ppmC
CH4 =	271.5	
CO2 =	275.6	
NMO =	286.9	

VRi Job No: M25-1304

Client Name and Sample Receipt Date:	ACT-130112, 1/23/13
Sample Recovery and Analysis Date:	January 25, 2013 by C.G. Simon

Note: Triplicate analyses must have a relative standard deviation of <2%, or <2 ppmC, whichever is greater.

Sample ID	Vessel	Species	*Ctmj* and *Ccmk* Analyzer Responses in normalized area counts			*Ctm* & *Ccm*, Mean normal counts	Calib. factors	*RF* Normal Area counts /ppmC	ppm in Sample Gas	TGNMO ppmC, *Ct* & *Cc*
M251304-112A-1	Tank-172	CO	4.79	4.46	3.66	4.3	A, B	1.0043	8.7	
AV/SV =	2.022	CH_4	0.75	0.79	1.10	0.9	A, B	0.9905	1.8	
		CO_2	2,366	2,389	2,359	2,371	A, B	0.9909	4,839	
		C_t NMO as C	34.17	34.88	35.27	34.8	A, B	1.0016	70.2	70.2
trap-1080	ICV-152	C_c VOC as CO_2	423.0	418.2	421.0	420.7	A, B	0.9909	451.2	
AV/SV =	1.063	NMO	2.01	0.25	0.96	1.1	A, B	1.0016	1.1	452.3
M251304-112A-2	Tank-195	CO	1.95	2.84	4.19	3.0	A, B	1.0043	5.6	
AV/SV =	1.882	CH_4	1.10	1.03	1.04	1.1	A, B	0.9905	2.0	
		CO_2	2,556	2,632	2,554	2,581	A, B	0.9909	4,902	
		C_t NMO as C	73.67	71.98	73.62	73	A, B	1.0016	137.3	137.3
trap-1104	ICV-153	C_c VOC as CO_2	381.6	386.4	383.6	383.8	A, B	0.9909	375.9	
AV/SV =	0.970	NMO	<1	<1	<1	<1	A, B	1.0016	<1	375.9
M251304-112A-3	Tank-171	CO	12.21	12.11	12.60	12.3	A, B	1.0043	20.8	
AV/SV =	1.696	CH_4	2.04	2.47	2.25	2.3	A, B	0.9905	3.9	
		CO_2	6,269	6,223	6,156	6,216	A, B	0.9909	10,636	
		C_t NMO as C	61.56	62.54	63.26	62.5	A, B	1.0016	105.7	105.7
trap-1021	ICV-154	C_c VOC as CO_2	630.6	638.9	640.2	636.6	A, B	0.9909	556.3	
AV/SV =	0.866	NMO	0.56	<1	0.50	0.7	A, B	1.0016	0.6	556.9

VRi Job No: M25-1304

Client Name and Sample Receipt Date:	ACT-130112, 1/23/13
Sample Recovery and Analysis Date:	January 25, 2013 by C.G. Simon

Note: Triplicate analyses must have a relative standard deviation of <2%, or <2 ppmC, whichever is greater.

Sample ID	Vessel	Species	*Ctmj* and *Ccmk* Analyzer Responses in normalized area counts			*Ctm* & *Ccm*, Mean normal counts	Calib. factors	*RF* Normal Area counts /ppmC	ppm in Sample Gas	TGNMO ppmC, *Ct* & *Cc*
M251304-112B-1	Tank-173	CO	42.2	41.7	42.0	42.0	A, B	1.0043	72.3	
AV/SV =	1.731	CH_4	7.27	7.42	7.27	7.3	A, B	0.9905	12.8	
		CO_2	6,608	6,622	6,557	6,596	A, B	0.9909	11,525	
		C_t NMO as C	1.81	2.99	2.48	2.4	A, B	1.0016	4.2	4.2
trap-1071	ICV-149	C_c VOC as CO_2	211.0	214.5	213.9	213.1	A, B	0.9909	220.6	
AV/SV =	1.025	NMO	-1.04	<1	1.48	0.5	A, B	1.0016	0.5	221.1
M251304-112B-2	Tank-189	CO	50.8	50.7	49.9	50.5	A, B	1.0043	79.6	
AV/SV =	1.584	CH_4	5.87	5.85	5.93	5.9	A, B	0.9905	9.4	
		CO_2	7,825	7,926	7,842	7,864	A, B	0.9909	12,574	
		C_t NMO as C	1.59	1.72	2.69	2.0	A, B	1.0016	3.2	3.2
trap-1042	ICV-150	C_c VOC as CO_2	106.3	106.2	106.6	106.4	A, B	0.9909	86.7	
AV/SV =	0.808	NMO	0.10	<1	0.48	0.5	A, B	1.0016	0.4	87.1
M251304-112B-3	Tank-182	CO	48.6	50.2	49.7	49.5	A, B	1.0043	75.4	
AV/SV =	1.530	CH_4	6.05	6.22	5.89	6.1	A, B	0.9905	9.3	
		CO_2	5,908	6,100	6,128	6,045	A, B	0.9909	9,333	
		C_t NMO as C	1.17	1.95	0.34	1.2	A, B	1.0016	1.8	1.8
trap-1095	ICV-151	C_c VOC as CO_2	242.6	240.7	240.8	241.4	A, B	0.9909	198.0	
AV/SV =	0.813	NMO	3.21	1.26	1.45	2.0	A, B	1.0016	1.6	199.7

VRi Job No: M25-1304

1/17/13 full calibration			new/old
1014	CO	240.42	102.3%
BP_{new}/BP_{old}	CH4	256.47	105.9%
101.1%	CO2	266.55	103.4%
0.0%	NMO	278.02	103.2%

	1/25/2013
BP mbar =	1025
CO normalization constant =	245.8
CH4 normalization constant =	271.5
CO2 normalization constant =	275.6
NMO normalization constant =	286.9

Calib. Species	Cal gas conc. ppmC	Response x1 Area Counts	Response x2 Area Counts	Response x3 Area Counts	Mean Response X Area Counts	RF Area Counts/ ppmC	% RSD	ZERO CORRECTION FOR BASELINE SHIFT DUE TO t/p GC PROGRAM
A -- CO	zero air	228	396	260	295		30	
A -- CO	52.8	12,944	12,991	13,006	12,981	245.8	0.25	zero-corrected values
B -- CO	52.8	13,045	13,078	13,156	13,093	248.0	0.44	zero-corrected values
A -- CH4	50.9	13,867	13,980	13,613	13,820	271.5	1.36	
B -- CH4	50.9	13,524	13,551	13,594	13,556	266.3	0.26	
A -- CO2	9,920	2,723,228	2,750,237	2,728,637	2,734,034	275.6	0.52	
A -- CO2	10,317	2,864,778	2,833,614	2,809,293	2,835,895	274.9	99.73%	1/25/13 SRS catox test
B -- CO2	9,920	2,655,095	2,697,526	2,699,837	2,684,153	270.6	0.94	
A -- NMO	zero-air	1,268	1,168	1,678	1,371		20	
A -- NMO	64.8	18,705	18,678	18,383	18,588	286.9	0.96	zero-corrected values
B -- NMO	64.8	18,405	18,920	18,624	18,649	287.8	1.39	zero-corrected values

VRi Job No: M25-1304 Sample Recovery and Analysis Date: January 25, 2013 by C.G. Simon

Sample ID	Vessel	Species				Ctm & Ccm, avg. counts	RSD %	RSD ppmC
M251304-112A-1	Tank-172	CO	1,472	1,391	1,195	1,353	11%	1
		CH4	203	214	298	238	22%	0
		CO2	652,138	658,398	650,037	653,524	1%	16
		Ct, NMO as C	11,173	11,378	11,488	11,346	1%	1
trap-1080	ICV-152	**Cc**, VOC as CO2	116,575	115,270	116,031	115,959	1%	2
		NMO	1,947	1,444	1,647	1,679	15%	1
M251304-112A-2	Tank-195	CO	774	992	1,324	1,030	27%	1
		CH4	299	280	282	287	4%	0
		CO2	704,401	725,452	703,916	711,256	2%	45
		Ct, NMO as C	22,505	22,019	22,491	22,338	1%	1
trap-1104	ICV-153	**Cc**, VOC as CO2	105,164	106,489	105,716	105,790	1%	2
		NMO	1,187	1,366	1,361	1,305	8%	0
M251304-112A-3	Tank-171	CO	3,296	3,273	3,393	3,321	2%	0
		CH4	553	670	610	611	10%	0
		CO2	1,727,697	1,715,037	1,696,602	1,713,112	1%	57
		Ct, NMO as C	19,031	19,310	19,519	19,287	1%	1
trap-1021	ICV-154	**Cc**, VOC as CO2	173,798	176,073	176,456	175,442	1%	5
		NMO	1,531	1,072	1,515	1,373	19%	1
M251304-112B-1	Tank-173	CO	10,677	10,537	10,616	10,610	1%	0
		CH4	1,974	2,015	1,974	1,988	1%	0
		CO2	1,821,301	1,825,036	1,807,245	1,817,861	1%	34
		Ct, NMO as C	1,891	2,228	2,083	2,067	8%	1
trap-1071	ICV-149	**Cc**, VOC as CO2	58,141	59,120	58,963	58,741	1%	2
		NMO	1,072	1,981	1,795	1,616	30%	2
M251304-112B-2	Tank-189	CO	12,773	12,765	12,574	12,704	1%	0
		CH4	1,593	1,587	1,610	1,597	1%	0
		CO2	2,156,709	2,184,480	2,161,334	2,167,508	1%	54
		Ct, NMO as C	1,828	1,865	2,142	1,945	9%	1
trap-1042	ICV-150	**Cc**, VOC as CO2	29,284	29,279	29,370	29,311	0%	0
		NMO	1,400	1,285	1,510	1,398	8%	0
M251304-112B-3	Tank-182	CO	12,239	12,638	12,512	12,463	2%	1
		CH4	1,643	1,688	1,599	1,643	3%	0
		CO2	1,628,413	1,681,199	1,688,913	1,666,175	2%	119
		Ct, NMO as C	1,707	1,930	1,468	1,702	14%	1
trap-1095	ICV-151	**Cc**, VOC as CO2	66,855	66,351	66,355	66,520	0%	1
		NMO	2,291	1,734	1,788	1,938	16%	1

EPA Method-25 Chain of Custody

Testing Company/Job Number:	Air Compliance Testing Inc / 130112
Facility/Location Tested:	Dual Bed Dehydration Unit (P017), P001 - P004, P009, P011 , P005 - P008 , P010, P013, P016 , and (J003)
Source Tested:	A.) Inlet duct B.) Exhaust stack PO# 1444
Test Date: 1/18/2013	

Note: Measure tank absolute pressures directly with a calibrated absolute pressure gauge, ***or*** record the tank vacuum with a Hg manometer and record the local barometric pressure at the same time. Tape a thermocouple to the tank and record the tank temperature each time a tank pressure is recorded.

Location	Run No.	Trap No.	Tank No.	Tank Initial Pres/mmHg	Initial Temp/°F	Tank Initial Vac/mmHg	Initial BP/mmHg	Tank Final Pres/mmHg	Tank Final Temp/°F	Tank Final Vac/mmHg	Final BP/mmHg	Lab use only
130112A	1	1080	172	1	35	747	748	522	36	228	750	726
130112A	2	1104	195	1	35	747	748	568	36	180	748	788
130112A	3	1021	171	0	35	748	748	606	36	142	748	840
130112B	1	1071	173	1	35	747	748	602	36	148	750	841
130112B	2	1042	189	1	35	747	748	663	36	85	748	~~923~~ 900 @ 1-24-13
130112B	3	1095	182	0	35	748	748	667	36	81	748	923
												mbar @ 66°F
			A.)		B.)							
		NOTES :	1% H20		8% H20							
			0% CO2		1% CO2							
			20% O2		19% O2							
			0% CO		0%CO							

Relinquished by:	[illegible signature]	Date: 1.21.13	All seals intact? YES
Received by	[illegible signature]	Date: 1-23-13	Dry ice OK? YES
~~PAX~~ Job No.		Comments:	

VRi M251304

Method 25 Record of Custody Sheet

Effective Date: 7/16/12
Rev No. 0
Issued by: Quality Manager

Shipping/Transportation Container Number:_____

Sample I.D. Number		Full Signature	Date	Time	Notes
130112 B- 1 - M25/TP (Trap # 1071)	B		1.18.13	10:00	
	S				
	B				
	S				
130112 B- 2 - M25/TP (Trap # 1042)	B				
	S		1.18.13	12:00	
	B				
	S				
130112 B- 3 - M25/TP (Trap # 1095)	B				
	S		1.18.13	14:00	
	B				
	S				
130112 B- 4 - M25/TP (Trap #)	B				
	S				
	B				
	S				
130112 B- 1 - M25/TK (Tank # 173)	B				
	S		1.18.13	10:00	
	B				
	S				
130112 B- 2 - M25/TK (Tank # 189)	B				
	S		1.18.13	12:00	
	B				
	S				
130112 B- 3 - M25/TK (Tank # 182)	B				
	S		1.18.13	14:00	
	B				
	S				
130112 B- 4 - M25/TK (Tank #)	B				
	S				
	B				
	S				

Were all seals intact? ✓ Yes _____ No (Describe seal and reasoning in the "Remarks")

Received By Sample Custodian _____ 1-23-13 _____
(Full Signature) (Date) (Time)

Remarks: VRi M251304

Air Compliance Testing, Inc.
D:\TESTING\ACT Test Methods\M025\Method 25
(Method 25-Record of Custody Sheet) 1/9/2013
1 of 1

Job Number: 130112 B
Done By / Date: JG / 1.21.13
Final Check By / Date: JG / 1.21.13

Method 25 Record of Custody Sheet

Effective Date: 7/16/12
Rev No. 0
Issued by: Quality Manager

Shipping/Transportation Container Number:_____

Sample I.D. Number		Full Signature	Date	Time	Notes
130112 A- 1 - M25/TP (Trap # 1080)	B		1.18.13	10:00	
	S				
	B				
	S				
130112 A- 2 - M25/TP (Trap # 1104)	B		1.18.13	12:00	
	S				
	B				
	S				
130112 A- 3 - M25/TP (Trap # 1021)	B		1.18.13	14:00	
	S				
	B				
	S				
130112 A- 4 - M25/TP (Trap #)	B				
	S				
	B				
	S				
130112 A- 1 - M25/TK (Tank # 172)	B		1.18.13	10:00	
	S				
	B				
	S				
130112 A- 2 - M25/TK (Tank # 195)	B		1.18.13	12:00	
	S				
	B				
	S				
130112 A- 3 - M25/TK (Tank # 171)	B		1.18.13	14:00	
	S				
	B				
	S				
130112 A- 4 - M25/TK (Tank #)	B				
	S				
	B				
	S				

Were all seals intact? ✓ Yes _____ No (Describe seal and reasoning in the "Remarks")

Received By Sample Custodian _____ 1-23-13 _____
(Full Signature) (Date) (Time)

Remarks: VRi M25130~~1~~4 (CD) 1-23-13

Air Compliance Testing, Inc.
D:\TESTING\ACT Test Methods\M025\Method 25
(Method 25-Record of Custody Sheet) 1/9/2013
1 of 1

Job Number: 130112 A
Done By / Date: JS / 1.21.13
Final Check By / Date: JS / 1.21.13

LIQUID TECHNOLOGY CORPORATION

"INDUSTRY LEADER IN SPECIALTY GASES"

L1T

Certificate of Analysis

- EPA PROTOCOL GAS -

Customer	VOC Reporting, Inc (Gainesville, FL)
Date	August 26, 2011
Delivery Receipt	DR-38222
Gas Standard	20.0 ppm C3H8, 50.0 ppm CH4, 50.0 ppm CO, 10,000 ppm CO2/Ultra Zero Air
Final Analysis Date	August 09, 2011
Expiration Date	August 09, 2014
Component	Propane, Methane, Carbon Monoxide, Carbon Dioxide
Balance Gas	Ultra Zero Air

Analytical Data: **DO NOT USE BELOW 150 psig**

EPA Protocol, Section No. 2.2, Procedure G-1

Reported Concentrations

Propane: 21.6 ppm +/- 0.21 ppm

Methane: 50.9 ppm +/- 0.50 ppm

Carbon Monoxide: 52.8 ppm +/- 0.52 ppm

Carbon Dioxide: 9920 ppm +/- 99 ppm

Ultra Zero Air: Balance

Reference Standards:

SRM/GMIS:	GMIS	GMIS	GMIS	GMIS
Cylinder Number:	CC-165367	CC-231299	CC-128892	CC-165347
Concentration:	19.92 ppm C3H8	48.75 ppm CH4	50.89 ppm CO	1.514% CO2
Expiration Date:	10/02/12	12/01/12	10/20/12	10/14/12

Certification Instrumentation

Component:	Propane	Methane	Carbon Monoxide	Carbon Dioxide
Make/Model:	Agilent 7890A	Agilent 7890A	Horiba - VIA 510	Agilent 7890A
Serial Number:	CN10736166	CN10736166	UUBKWXYV	CN10736166
Principal of Measurement:	GC-FID	GC-FID	NDIR	GC-TCD
Last Calibration:	August 10, 2011	August 10, 2011	August 08, 2011	August 10, 2011

Cylinder Data

Cylinder Serial Number:	CC-115790	Cylinder Outlet:	CGA 590
Cylinder Volume:	133 Cubic Feet	Cylinder Pressure:	1900 psig, 70°F

Analytical Uncertainty and NIST Traceability are in compliance with EPA-600/R-97/121.

Certified by: Adam Strickland

PGVP Vendor ID: E12011

"UNMATCHED EXCELLENCE"

2048 APEX COURT APOPKA, FLORIDA 32703 ~ PHONE (407)-292-2990 FAX (407)-292-3313
WWW.LIQUIDTECHCORP.COM

LIQUID TECHNOLOGY CORPORATION

"INDUSTRY LEADER IN SPECIALTY GASES"

CH4

Certificate of Analysis

- EPA PROTOCOL GAS -

Customer	VOC Reporting, Inc (Gainesville, FL)
Date	August 26, 2011
Delivery Receipt	DR-38222
Gas Standard	10,000 ppm Methane/Ultra Zero Air - EPA PROTOCOL
Final Analysis Date	August 25, 2011
Expiration Date	August 25, 2014

Component	Methane
Balance Gas	Ultra Zero Air

Analytical Data:

DO NOT USE BELOW 150 psig

EPA Protocol, Section No. 2.2, Procedure G-1

Reported Concentrations

Methane: 10,317 ppm +/- 103 ppm

Ultra Zero Air: Balance

Reference Standards:

SRM/GMIS:	GMIS
Cylinder Number:	EB-0016001
Concentration:	4957.66 ppm Methane
Expiration Date:	05/19/13

Certification Instrumentation

Component:	Methane
Make/Model:	Agilent 7890A
Serial Number:	CN10736166
Principal of Measurement:	GC-FID
Last Calibration:	August 10, 2011

Cylinder Data

Cylinder Serial Number:	CC-233228	Cylinder Outlet:	CGA 590
Cylinder Volume:	140 Cubic Feet	Cylinder Pressure:	2000 psig, 70°F

Analytical Uncertainty and NIST Traceability are in compliance with EPA-600/R-97/121.

Certified by:

Adam Strickland

PGVP Vendor ID: E12011

"UNMATCHED EXCELLENCE"

2048 APEX COURT APOPKA, FLORIDA 32703 ~ PHONE (407)-292-2990 FAX (407)-292-3313
WWW.LIQUIDTECHCORP.COM

Maxxam

Success Through Science®

Your P.O. #: 1442
Your Project #: 130105

Attention: Tate Strickler
Air Compliance Testing Inc.
P.O. Box 41156
Cleveland, OH
USA 4414-0156

Report Date: 2013/02/05

CERTIFICATE OF ANALYSIS

MAXXAM JOB #: B310867
Received: 2013/01/23, 23:30

Sample Matrix: Stack Sampling Train
Samples Received: 4

Analyses	Quantity	Date Extracted	Date Analyzed	Laboratory Method	Method Reference
Hydrogen Halides in H2SO4 Imp.	4	2013/01/30	2013/01/30	BRL SOP-00108	EPA Method 26A
Volume of Sulfuric Acid Impinger	4	N/A	2013/01/30		

* RPDs calculated using raw data. The rounding of final results may result in the apparent difference.

Encryption Key

Clayton Johnson
05 Feb 2013 17:30:33 -05:00

Please direct all questions regarding this Certificate of Analysis to your Project Manager.

Clayton Johnson, Project Manager
Email: CJohnson@maxxam.ca
Phone# (905) 817-5769

==========

Maxxam has procedures in place to guard against improper use of the electronic signature and have the required "signatories", as per section 5.10.2 of ISO/IEC 17025:2005(E), signing the reports. For Service Group specific validation please refer to the Validation Signature Page.

Total cover pages: 1

Maxxam Analytics International Corporation o/a Maxxam Analytics 6740 Campobello Road, Mississauga, Ontario, L5N 2L8 Tel: (905) 817-5700 Toll-Free: 800-563-6266 Fax: (905) 817-5777 www.maxxam.ca

Maxxam

Success Through Science®

Maxxam Job #: B310867
Report Date: 2013/02/05

Air Compliance Testing Inc.
Client Project #: 130105

Your P.O. #: 1442

EPA M26A HYDROGEN HALIDES AND HALOGENS (STACK SAMPLING TRAIN)

Maxxam ID		QI2189		QI2190	QI2190		
Sampling Date		2013/01/21 12:35		2013/01/18 14:00	2013/01/18 14:00		
	Units	**130112B-BL-M26A/BH1**	**RDL**	**130112B-1-M26A/BH1**	**130112B-1-M26A/BH1 Lab-Dup**	**RDL**	**QC Batch**
Sulfuric Acid Volume	ml	200	1	386		1	3109467
Miscellaneous Parameters							
Hydrochloric Acid	ug	<200	200	1800	1800	400	3109470

RDL = Reportable Detection Limit
QC Batch = Quality Control Batch

Maxxam ID		QI2191	QI2192		
Sampling Date		2013/01/18 14:00	2013/01/18 14:00		
	Units	**130112B-2-M26A/BH1**	**130112B-3-M26A/BH1**	**RDL**	**QC Batch**
Sulfuric Acid Volume	ml	442	424	1	3109467
Miscellaneous Parameters					
Hydrochloric Acid	ug	3200	3400	400	3109470

RDL = Reportable Detection Limit
QC Batch = Quality Control Batch

Maxxam Analytics International Corporation o/a Maxxam Analytics 6740 Campobello Road, Mississauga, Ontario, L5N 2L8 Tel: (905) 817-5700 Toll-Free: 800-563-6266 Fax: (905) 817-5777 www.maxxam.ca

Maxxam

Success Through Science®

Maxxam Job #: B310867
Report Date: 2013/02/05

Air Compliance Testing Inc.
Client Project #: 130105

Your P.O. #: 1442

Test Summary

Maxxam ID QI2189
Sample ID 130112B-BL-M26A/BH1
Matrix Stack Sampling Train

Collected 2013/01/21
Shipped
Received 2013/01/23

Test Description	Instrumentation	Batch	Extracted	Analyzed	Analyst
Hydrogen Halides in H2SO4 Imp.	IC/SPEC	3109470	2013/01/30	2013/01/30	Ann-Marie Stern
Volume of Sulfuric Acid Impinger		3109467	N/A	2013/01/30	Ann-Marie Stern

Maxxam ID QI2190
Sample ID 130112B-1-M26A/BH1
Matrix Stack Sampling Train

Collected 2013/01/18
Shipped
Received 2013/01/23

Test Description	Instrumentation	Batch	Extracted	Analyzed	Analyst
Hydrogen Halides in H2SO4 Imp.	IC/SPEC	3109470	2013/01/30	2013/01/30	Ann-Marie Stern
Volume of Sulfuric Acid Impinger		3109467	N/A	2013/01/30	Ann-Marie Stern

Maxxam ID QI2190 Dup
Sample ID 130112B-1-M26A/BH1
Matrix Stack Sampling Train

Collected 2013/01/18
Shipped
Received 2013/01/23

Test Description	Instrumentation	Batch	Extracted	Analyzed	Analyst
Hydrogen Halides in H2SO4 Imp.	IC/SPEC	3109470	2013/01/30	2013/01/30	Ann-Marie Stern

Maxxam ID QI2191
Sample ID 130112B-2-M26A/BH1
Matrix Stack Sampling Train

Collected 2013/01/18
Shipped
Received 2013/01/23

Test Description	Instrumentation	Batch	Extracted	Analyzed	Analyst
Hydrogen Halides in H2SO4 Imp.	IC/SPEC	3109470	2013/01/30	2013/01/30	Ann-Marie Stern
Volume of Sulfuric Acid Impinger		3109467	N/A	2013/01/30	Ann-Marie Stern

Maxxam ID QI2192
Sample ID 130112B-3-M26A/BH1
Matrix Stack Sampling Train

Collected 2013/01/18
Shipped
Received 2013/01/23

Test Description	Instrumentation	Batch	Extracted	Analyzed	Analyst
Hydrogen Halides in H2SO4 Imp.	IC/SPEC	3109470	2013/01/30	2013/01/30	Ann-Marie Stern
Volume of Sulfuric Acid Impinger		3109467	N/A	2013/01/30	Ann-Marie Stern

Maxxam Analytics International Corporation o/a Maxxam Analytics 6740 Campobello Road, Mississauga, Ontario, L5N 2L8 Tel: (905) 817-5700 Toll-Free: 800-563-6266 Fax: (905) 817-5777 www.maxxam.ca

Maxxam

Success Through Science

Maxxam Job #: B310867
Report Date: 2013/02/05

Air Compliance Testing Inc.
Client Project #: 130105

Your P.O. #: 1442

GENERAL COMMENTS

Sample QI2190-01: samples were diluted 2x due to matrix interference.

Results relate only to the items tested.

Maxxam Analytics International Corporation o/a Maxxam Analytics 6740 Campobello Road, Mississauga, Ontario, L5N 2L8 Tel: (905) 817-5700 Toll-Free: 800-563-6266 Fax: (905) 817-5777 www.maxxam.ca

Maxxam

Success Through Service

Air Compliance Testing Inc.
Attention: Tate Strickler
Client Project #: 130105
P.O. #: 1442
Site Location:

Quality Assurance Report

Maxxam Job Number: GB310867

QA/QC Batch Num Init	QC Type	Parameter	Date Analyzed yyyy/mm/dd	Value	%Recovery	Units	QC Limits
3109470 A_S	Matrix Spike (QI2190)	Hydrochloric Acid	2013/01/30		98	%	80 - 120
	Spiked Blank	Hydrochloric Acid	2013/01/30		101	%	90 - 110
	Method Blank	Hydrochloric Acid	2013/01/30	<200		ug	
	RPD - Sample/Sample Dup	Hydrochloric Acid	2013/01/30	NC		%	20

Matrix Spike: A sample to which a known amount of the analyte of interest has been added. Used to evaluate sample matrix interference.
Spiked Blank: A blank matrix sample to which a known amount of the analyte, usually from a second source, has been added. Used to evaluate method accuracy.
Method Blank: A blank matrix containing all reagents used in the analytical procedure. Used to identify laboratory contamination.
NC (RPD): The RPD was not calculated. The level of analyte detected in the parent sample and its duplicate was not sufficiently significant to permit a reliable calculation.

Maxxam Analytics International Corporation o/a Maxxam Analytics 6740 Campobello Road, Mississauga, Ontario, L5N 2L8 Tel: (905) 817-5700 Toll-Free: 800-563-6266 Fax: (905) 817-5777 www.maxxam.ca

Validation Signature Page

Maxxam Job #: B310867

The analytical data and all QC contained in this report were reviewed and validated by the following individual(s).

Frank Mo, B.Sc., Inorganic Lab. Manager

==========

Maxxam has procedures in place to guard against improper use of the electronic signature and have the required "signatories", as per section 5.10.2 of ISO/IEC 17025:2005(E), signing the reports. For Service Group specific validation please refer to the Validation Signature Page.

Method 26A Sample Record of Custody BH1

Effective Date: 7/16/12
Rev No. 0
Issued by: Quality Manager

Shipping/Transportation Container Number: PO # 1445

Seal I.D. No.		Full Signature	Date	Time	Notes	Final Vol. ml
130112 B - 1 - M26A/BH1	S	[illegible]	1/18/13	1400	Split to 100 .1N 93 H_2O	200 ml 0.1N H2SO4 / 193 ml H20
	B	[illegible]	1.21.13	12:35		
	S	[illegible]	1.21.13	12:40		
	B					
130112 B - 2 - M26A/BH1	S	[illegible]	1/18/13	1400	Split to 100 .1N 121 H_2O	200 ml 0.1N H2SO4 / 221 ml H20
	B	[illegible]	1.21.13	12:41		
	S	[illegible]	1.21.13	12:44		
	B					
130112 B - 3 - M26A/BH1	S	[illegible]	1/18/13	1400	Split to 100 .1N 112 H_2O	200 ml 0.1N H2SO4 / 212 ml H20
	B	[illegible]	1.21.13	12:46		
	S	[illegible]	1.21.13	12:48		
	B					
130112 B - 4 - M26A/BH1	S					200 ml 0.1N H2SO4 / ____ ml H20
	B					
	S					
	B					
130112 B - BL - M26A/BH1	S	[illegible]	1.21.13	12:35	Split to 100 .1N 100 H_2O	200 ml 0.1N H2SO4 / 200 ml H20
	B	[illegible]	1.21.13	12:49		
	S	[illegible]	1.21.13	12:50		
	B					
	S					
	B					
	S					
	B					
	S					
	B					

Were all seals intact? ____Yes _____No (Describe seal and reasoning in the "Remarks")

Were all liquid levels at marked levels?_____Yes _____No (Estimate loss in the "Remarks")

Received By Sample Custodian _____ (Full Signature) _____ (Date) _____ (Time)

Remarks: _____

Air Compliance Testing, Inc.
D:\Testing\ACT Test Methods\M026A\Method 26A
(Method 26A-Sample Record of Custody BH1) 1/9/2013
1 of 1

Job Number: 130112 B
Done By / Date: JG / 1.21.13
Final Check By / Date: JG / 1.21.13

Maxxam Analytics International Corporation o/a Maxxam Analytics 6740 Campobello Road, Mississauga, Ontario, L5N 2L8 Tel: (905) 817-5700 Toll-Free: 800-563-6266 Fax: (905) 817-5777 www.maxxam.ca

Chain of Custody Form - Source

Maxxam Analytics
6740 Campobello Road
Mississauga, ON L5N 2L8
www.maxxamanalytics.com
Toll Free: 1-800-668-0639
Phone: (905) 817-5700
Fax: (905) 817-5777

Page 1 of 1

CLIENT INFORMATION SECTION

Company Name: Air Compliance Testing Inc
Project Manager: Tate Strieder
e-mail: tate@aircomp.com
Address: 10260 Brecksville Rd
Brecksville, OH 44141
Phone: 440.262.3762 Fax: 440.262.3767
Sampled by: Chuck Gillette

ANALYSIS REQUESTED

MAXXAM use only	Field Sample ID	# Bottles	Collection Date	Collection Time	Initial Impinger Charge Volumes (mL)*	USEPA Method 26A analyze for hydrochloric acid	USEPA Method 26A analyze as blank		Final volume of 1N H2SO4 (ml)	Final volume of H2O (ml)		USEPA Method 18 analyze for methylene chloride and tetrachloroethylene				
	130112B-1-M26A/BH1	1	1.18.13	14:00	200	x			100	93						
	130112B-2-M26A/BH1	1	1.18.13	14:00	200	x			100	121						
	130112B-3-M26A/BH1	1	1.18.13	14:00	200	x			100	112						
	130112B-BL-M26A/BH1	1	1.21.13	12:35	200		x		100	100						
	130112A-1-M18/Bag	1 bag	1.18.13	14:00								x				
	130112A-2-M18/Bag	1 bag	1.18.13	14:00								x				
	130112A-3-M18/Bag	1 bag	1.18.13	14:00								x				
	130112B-1-M18/Bag	1 bag	1.18.13	14:00								x				
	130112B-2-M18/Bag	1 bag	1.18.13	14:00								x				
	130112B-3-M18/Bag	1 bag	1.18.13	14:00								x				

TAT Requirement

STD 10 Business day ✓
Rush 5 Business day
Rush 2 Business day
Rush 1 Business day
Other (specify):

PROJECT INFORMATION

Project #: 130112
Name: 130112
PO #: 1445
Maxxam Quote #:
Maxxam Contact:

REPORTING REQUIREMENTS

Summary Report only
Summary Report & ✓
Raw Data Package **
** additional cost may apply

PROJECT SPECIFIC COMMENTS

All samples were split in half

* Initial Impinger charge volumes are required before the following analysis can be started: Method 26, CTM-027 & Method 8

Client Signature: [signature]
Affiliation: Air Compliance Testing, Inc.
Date/Time: 1.21.13 / 16:30

Received by:
Affiliation:
Date/Time:

Method 23 / TO9A

2005 WHO ☐ TEF x DL ☐
1989 NATO TEF ☐ TEF x 0 DL ☐
1998 WHO ☐ TEF x 0.5 DL ☐

AR3 JAN 23 2013 22/24/24 C

Maxxam

Success Through Science®

Your P.O. #: 1445
Your Project #: 130112
Site Location: 130112
Your C.O.C. #: na

Attention: Tate Strickler
Air Compliance Testing Inc.
P.O. Box 41156
Cleveland, OH
USA 4414-0156

Report Date: 2013/02/15

CERTIFICATE OF ANALYSIS

MAXXAM JOB #: B310886
Received: 2013/01/23, 11:30

Sample Matrix: Tedlar Bag
Samples Received: 7

Analyses	Quantity	Date Extracted	Date Analyzed	Laboratory Method	Method Reference
Volatile Organics in Air (TO-15) (1)	4	N/A	2013/01/23	BRL SOP-00304	EPA TO-15
Volatile Organics in Air (TO-15) (1)	2	N/A	2013/01/24	BRL SOP-00304	EPA TO-15
Volatile Organics in Air (TO-15) (1)	1	N/A	2013/02/09	BRL SOP-00304	EPA TO-15

* RPDs calculated using raw data. The rounding of final results may result in the apparent difference.

(1) Air sampling canisters have been cleaned in accordance with U.S. EPA Method TO14A. At the end of the cleaning, evacuation, and pressurization cycles, one canister was selected and was pressurized with Zero Air. This canister was then analyzed via TO14A on a GC/MS. The canister must have been found to contain <0.2 ppbv concentration of all target analytes in order for the batch to have been considered clean. Each canister also underwent a leak check prior to shipment.

Please Note: SUMMA® canister samples will be retained by Maxxam for a period of 5 calendar days or as contractually agreed from the date of this report, after which time they will be cleaned for reuse. If you require a longer sample storage period, please contact your service representative.

Encryption Key

Clayton Johnson
15 Feb 2013 11:48:11 -05:00

Please direct all questions regarding this Certificate of Analysis to your Project Manager.

Clayton Johnson, Project Manager
Email: CJohnson@maxxam.ca
Phone# (905) 817-5769

==========

Maxxam has procedures in place to guard against improper use of the electronic signature and have the required "signatories", as per section 5.10.2 of ISO/IEC 17025:2005(E), signing the reports. For Service Group specific validation please refer to the Validation Signature Page.

Total cover pages: 1

Maxxam Analytics International Corporation o/a Maxxam Analytics 6740 Campobello Road, Mississauga, Ontario, L5N 2L8 Tel: (905) 817-5700 Toll-Free: 800-563-6266 Fax: (905) 817-5777 www.maxxam.ca

Maxxam

Success Through Science®

Maxxam Job #: B310886
Report Date: 2013/02/15

Air Compliance Testing Inc.
Client Project #: 130112
Site Location: 130112
Your P.O. #: 1445

VOLATILE ORGANICS BY GC/MS (TEDLAR BAG)

Maxxam ID		QI2291		QI2292		QI2293		
Sampling Date		2013/01/18 14:00		2013/01/18 14:00		2013/01/18 14:00		
COC Number		na		na		na		
	Units	**130112A-1-M18/BAG**	**RDL**	**130112A-2-M18/BAG**	**QC Batch**	**130112A-3-M18/BAG**	**RDL**	**QC Batch**
Volatile Organics								
Methylene Chloride(Dichloromethane)	ppbv	24300	400	19000	3106653	17600	800	3103871
Tetrachloroethylene	ppbv	20900	100	69800	3106653	91000	200	3103871
Surrogate Recovery (%)								
Bromochloromethane	%	83		85	3106653	74		3103871
D5-Chlorobenzene	%	76		86	3106653	66		3103871
Difluorobenzene	%	82		86	3106653	74		3103871

RDL = Reportable Detection Limit
QC Batch = Quality Control Batch

Maxxam ID		QI2294	QI2294		QI2295		
Sampling Date		2013/01/18 14:00	2013/01/18 14:00		2013/01/18 14:00		
COC Number		na	na		na		
	Units	**130112B-1-M18/BAG**	**130112B-1-M18/BAG Lab-Dup**	**RDL**	**130112B-2-M18/BAG**	**RDL**	**QC Batch**
Volatile Organics							
Methylene Chloride(Dichloromethane)	ppbv	457	454	8.0	307	16	3103871
Tetrachloroethylene	ppbv	452	480	2.0	1270	4.0	3103871
Surrogate Recovery (%)							
Bromochloromethane	%	82	82		83		3103871
D5-Chlorobenzene	%	73	75		75		3103871
Difluorobenzene	%	83	84		83		3103871

RDL = Reportable Detection Limit
QC Batch = Quality Control Batch

Maxxam Analytics International Corporation o/a Maxxam Analytics 6740 Campobello Road, Mississauga, Ontario, L5N 2L8 Tel: (905) 817-5700 Toll-Free: 800-563-6266 Fax: (905) 817-5777 www.maxxam.ca

Maxxam

Maxxam Job #: B310886
Report Date: 2013/02/15

Air Compliance Testing Inc.
Client Project #: 130112
Site Location: 130112
Your P.O. #: 1445

VOLATILE ORGANICS BY GC/MS (TEDLAR BAG)

Maxxam ID		QI2296			QJ9809		
Sampling Date		2013/01/18 14:00			2013/01/18 14:00		
COC Number		na			na		
	Units	**130112B-3-M18/BAG**	**RDL**	**QC Batch**	**130112A-3-M18/BAG-SPIKED**	**RDL**	**QC Batch**
Volatile Organics							
Methylene Chloride(Dichloromethane)	ppbv	226	16	3103871	1820	24	3121538
Tetrachloroethylene	ppbv	1180	4.0	3103871	1710	6.0	3121538
Surrogate Recovery (%)							
Bromochloromethane	%	82		3103871	76		3121538
D5-Chlorobenzene	%	75		3103871	75		3121538
Difluorobenzene	%	84		3103871	76		3121538

RDL = Reportable Detection Limit
QC Batch = Quality Control Batch

Maxxam Analytics International Corporation o/a Maxxam Analytics 6740 Campobello Road, Mississauga, Ontario, L5N 2L8 Tel: (905) 817-5700 Toll-Free: 800-563-6266 Fax: (905) 817-5777 www.maxxam.ca

Maxxam

Success Through Science

Maxxam Job #: B310886
Report Date: 2013/02/15

Air Compliance Testing Inc.
Client Project #: 130112
Site Location: 130112
Your P.O. #: 1445

Test Summary

Maxxam ID QI2291
Sample ID 130112A-1-M18/BAG
Matrix Tedlar Bag

Collected 2013/01/18
Shipped
Received 2013/01/23

Test Description	Instrumentation	Batch	Extracted	Analyzed	Analyst
Volatile Organics in Air (TO-15)	GC/MS	3106653	N/A	2013/01/24	Diane Temniuk

Maxxam ID QI2292
Sample ID 130112A-2-M18/BAG
Matrix Tedlar Bag

Collected 2013/01/18
Shipped
Received 2013/01/23

Test Description	Instrumentation	Batch	Extracted	Analyzed	Analyst
Volatile Organics in Air (TO-15)	GC/MS	3106653	N/A	2013/01/24	Diane Temniuk

Maxxam ID QI2293
Sample ID 130112A-3-M18/BAG
Matrix Tedlar Bag

Collected 2013/01/18
Shipped
Received 2013/01/23

Test Description	Instrumentation	Batch	Extracted	Analyzed	Analyst
Volatile Organics in Air (TO-15)	GC/MS	3103871	N/A	2013/01/23	Jie Wu

Maxxam ID QI2294
Sample ID 130112B-1-M18/BAG
Matrix Tedlar Bag

Collected 2013/01/18
Shipped
Received 2013/01/23

Test Description	Instrumentation	Batch	Extracted	Analyzed	Analyst
Volatile Organics in Air (TO-15)	GC/MS	3103871	N/A	2013/01/23	Jie Wu

Maxxam ID QI2294 Dup
Sample ID 130112B-1-M18/BAG
Matrix Tedlar Bag

Collected 2013/01/18
Shipped
Received 2013/01/23

Test Description	Instrumentation	Batch	Extracted	Analyzed	Analyst
Volatile Organics in Air (TO-15)	GC/MS	3103871	N/A	2013/01/23	Jie Wu

Maxxam ID QI2295
Sample ID 130112B-2-M18/BAG
Matrix Tedlar Bag

Collected 2013/01/18
Shipped
Received 2013/01/23

Test Description	Instrumentation	Batch	Extracted	Analyzed	Analyst
Volatile Organics in Air (TO-15)	GC/MS	3103871	N/A	2013/01/23	Jie Wu

Maxxam ID QI2296
Sample ID 130112B-3-M18/BAG
Matrix Tedlar Bag

Collected 2013/01/18
Shipped
Received 2013/01/23

Test Description	Instrumentation	Batch	Extracted	Analyzed	Analyst
Volatile Organics in Air (TO-15)	GC/MS	3103871	N/A	2013/01/23	Jie Wu

Maxxam Analytics International Corporation o/a Maxxam Analytics 6740 Campobello Road, Mississauga, Ontario, L5N 2L8 Tel: (905) 817-5700 Toll-Free: 800-563-6266 Fax: (905) 817-5777 www.maxxam.ca

Maxxam

Success Through Science®

Maxxam Job #: B310886
Report Date: 2013/02/15

Air Compliance Testing Inc.
Client Project #: 130112
Site Location: 130112
Your P.O. #: 1445

Test Summary

Maxxam ID QJ9809
Sample ID 130112A-3-M18/BAG- SPIKED
Matrix Tedlar Bag

Collected 2013/01/18
Shipped
Received 2013/01/23

Test Description	Instrumentation	Batch	Extracted	Analyzed	Analyst
Volatile Organics in Air (TO-15)	GC/MS	3121538	N/A	2013/02/09	Diane Temniuk

Maxxam Analytics International Corporation o/a Maxxam Analytics 6740 Campobello Road, Mississauga, Ontario, L5N 2L8 Tel: (905) 817-5700 Toll-Free: 800-563-6266 Fax: (905) 817-5777 www.maxxam.ca

Maxxam

Maxxam Job #: B310886
Report Date: 2013/02/15

Air Compliance Testing Inc.
Client Project #: 130112
Site Location: 130112
Your P.O. #: 1445

GENERAL COMMENTS

All samples were received and analyzed after the 48 hour holding time.

Sample QI2291-01: Sample was run at a 500x dilution, DLs adjusted accordingly.

Sample QI2292-01: Sample was run at a 1000x dilution, DLs adjusted accordingly.

Sample QI2293-01: A 1000x dilution was prepared and analyzed. The DLs were adjusted accordingly.

Sample QI2294-01: A 10x dilution was prepared and analyzed. The DLs were adjusted accordingly.

Sample QI2295-01: A 20x dilution was prepared and analyzed. The DLs were adjusted accordingly.

Sample QI2296-01: A 20x dilution was prepared and analyzed. The DLs were adjusted accordingly.

Sample QJ9809-01: Matrix Spike results (5 days after spiking) were 78% for Tetrachloroethylene and 82% for Methylene Chloride.

Results relate only to the items tested.

Maxxam Analytics International Corporation o/a Maxxam Analytics 6740 Campobello Road, Mississauga, Ontario, L5N 2L8 Tel: (905) 817-5700 Toll-Free: 800-563-6266 Fax: (905) 817-5777 www.maxxam.ca

Maxxam

Success Through Service

Air Compliance Testing Inc.
Attention: Tate Strickler
Client Project #: 130112
P.O. #: 1445
Site Location: 130112

Quality Assurance Report

Maxxam Job Number: GB310886

QA/QC Batch Num Init	QC Type	Parameter	Date Analyzed yyyy/mm/dd	Value	%Recovery	Units	QC Limits
3103871 JIW	Spiked Blank	Bromochloromethane	2013/01/23		101	%	60 - 140
		D5-Chlorobenzene	2013/01/23		102	%	60 - 140
		Difluorobenzene	2013/01/23		103	%	60 - 140
		Methylene Chloride(Dichloromethane)	2013/01/23		88	%	70 - 130
		Tetrachloroethylene	2013/01/23		99	%	70 - 130
	Method Blank	Bromochloromethane	2013/01/23		92	%	60 - 140
		D5-Chlorobenzene	2013/01/23		82	%	60 - 140
		Difluorobenzene	2013/01/23		92	%	60 - 140
		Methylene Chloride(Dichloromethane)	2013/01/23	<0.80		ppbv	
		Tetrachloroethylene	2013/01/23	<0.20		ppbv	
	RPD - Sample/Sample Dup	Methylene Chloride(Dichloromethane)	2013/01/23	0.6		%	25
		Tetrachloroethylene	2013/01/23	5.9		%	25
3106653 DVO	Spiked Blank	Bromochloromethane	2013/01/24		101	%	60 - 140
		D5-Chlorobenzene	2013/01/24		103	%	60 - 140
		Difluorobenzene	2013/01/24		102	%	60 - 140
		Methylene Chloride(Dichloromethane)	2013/01/24		98	%	70 - 130
		Tetrachloroethylene	2013/01/24		96	%	70 - 130
	Method Blank	Bromochloromethane	2013/01/24		87	%	60 - 140
		D5-Chlorobenzene	2013/01/24		86	%	60 - 140
		Difluorobenzene	2013/01/24		88	%	60 - 140
		Methylene Chloride(Dichloromethane)	2013/01/24	<0.80		ppbv	
		Tetrachloroethylene	2013/01/24	<0.20		ppbv	
	RPD - Sample/Sample Dup	Tetrachloroethylene	2013/01/24	NC		%	25
3121538 DVO	Spiked Blank	Bromochloromethane	2013/02/09		98	%	60 - 140
		D5-Chlorobenzene	2013/02/09		100	%	60 - 140
		Difluorobenzene	2013/02/09		101	%	60 - 140
		Methylene Chloride(Dichloromethane)	2013/02/09		102	%	70 - 130
		Tetrachloroethylene	2013/02/09		106	%	70 - 130
	Method Blank	Bromochloromethane	2013/02/09		91	%	60 - 140
		D5-Chlorobenzene	2013/02/09		86	%	60 - 140
		Difluorobenzene	2013/02/09		93	%	60 - 140
		Methylene Chloride(Dichloromethane)	2013/02/09	<0.80		ppbv	
		Tetrachloroethylene	2013/02/09	<0.20		ppbv	

Spiked Blank: A blank matrix sample to which a known amount of the analyte, usually from a second source, has been added. Used to evaluate method accuracy.
Method Blank: A blank matrix containing all reagents used in the analytical procedure. Used to identify laboratory contamination.
Surrogate: A pure or isotopically labeled compound whose behavior mirrors the analytes of interest. Used to evaluate extraction efficiency.
NC (RPD): The RPD was not calculated. The level of analyte detected in the parent sample and its duplicate was not sufficiently significant to permit a reliable calculation.

Maxxam Analytics International Corporation o/a Maxxam Analytics 6740 Campobello Road, Mississauga, Ontario, L5N 2L8 Tel: (905) 817-5700 Toll-Free: 800-563-6266 Fax: (905) 817-5777 www.maxxam.ca

Validation Signature Page

Maxxam Job #: B310886

The analytical data and all QC contained in this report were reviewed and validated by the following individual(s).

Maureen Smith

Maureen Smith, Supervisor, Volatiles

==========

Maxxam has procedures in place to guard against improper use of the electronic signature and have the required "signatories", as per section 5.10.2 of ISO/IEC 17025:2005(E), signing the reports. For Service Group specific validation please refer to the Validation Signature Page.

Method 18 Custody (Bag)

Effective Date: 7/16/12
Rev No. 0
Issued by: Quality Manager

Shipping/Transportation Container Number:_____

Seal I.D. no.		Full Signature	Date	Time	Notes
130112 A - 1 - M18/Bag	S	[illegible]	1/18/13	1400	
	B				
	S				
	B				
130112 A - 2 - M18/Bag	S	[illegible]	1/18/13	1400	
	B				
	S				
	B				
130112 A - 3 - M18/Bag	S	[illegible]	1/18/13	1400	
	B				
	S				
	B				
130112 A - 4 - M18/Bag	S				
	B				
	S				
	B				
	S				
	B				
	S				
	B				
	S				
	B				
	S				
	B				
	S				
	B				

Were all seals intact?____Yes _____No (Describe seal and reasoning in the "Remarks")
Were all liquid levels at marked levels?_____Yes _____No (Estimate loss in the "Remarks")
Received by Sample Custodian _____ _____ _____
(Full Signature) (Date) (Time)

Remarks _____

Air Compliance Testing, Inc
D:\Testing\ACT Test Methods\M018\Method 18 (Method 18-Custody (Bag)) 1/9/2013
1 of 1

Job Number: 130112 A
Done By / Date: JG / 1.21.13
Final Check By / Date: JG / 1.21.13

Maxxam Analytics International Corporation o/a Maxxam Analytics 6740 Campobello Road, Mississauga, Ontario, L5N 2L8 Tel: (905) 817-5700 Toll-Free: 800-563-6266 Fax: (905) 817-5777 www.maxxam.ca

Method 18 Custody (Bag)

Effective Date: 7/16/12
Rev.No. 0
Issued by: Quality Manager

Shipping/Transportation Container Number:_____

Seal I.D. no.		Full Signature	Date	Time	Notes
130112 B - 1 - M18/Bag	S	[illegible]	1/18/13	1400	
	B				
	S				
	B				
130112 B - 2 - M18/Bag	S	[illegible]	1/18/13	1400	
	B				
	S				
	B				
130112 B - 3 - M18/Bag	S	[illegible]	1/18/13	1400	
	B				
	S				
	B				
130112 B - 4 - M18/Bag	S				
	B				
	S				
	B				
	S				
	B				
	S				
	B				
	S				
	B				
	S				
	B				

Were all seals intact?____Yes _____No (Describe seal and reasoning in the "Remarks") *

Were all liquid levels at marked levels?_____Yes _____No (Estimate loss in the "Remarks")

Received by Sample Custodian _____ _____ _____

(Full Signature) (Date) (Time)

* Remarks _____

Air Compliance Testing, Inc.
D:\Testing\ACT Test Methods\M018\Method 18 (Method 18-Custody (Bag)) 1/9/2013
1 of 1

Job Number: 130112 B
Done By / Date: JG / 1.21.13
Final Check By / Date: JG / 1.21.13

Maxxam Analytics International Corporation o/a Maxxam Analytics 6740 Campobello Road, Mississauga, Ontario, L5N 2L8 Tel: (905) 817-5700 Toll-Free: 800-563-6266 Fax: (905) 817-5777 www.maxxam.ca

Chain of Custody Form - Source

Maxxam Analytics
6740 Campobello Road
Mississauga, ON L5N 2L8
www.maxxamanalytics.com
Toll Free: 1-800-668-0639
Phone: (905) 817-5700
Fax: (905) 817-5777

Page 1 of 1

CLIENT INFORMATION SECTION

Company Name: Air Compliance Testing, Inc.
Project Manager: Tate Stocker
e-mail: tate@aircomp.com
Address: 10050 Brecksville Rd.
Brecksville, OH 44141
Phone: 440.262.3760 Fax: 440.262.3767
Sampled by: Chuck Gifels

ANALYSIS REQUESTED

MAXXAM use only	Field Sample ID	# Bottles	Collection Date	Collection Time	Initial Impinger Charge Volumes (mL)*	USEPA Method 26A analyze for hydrochloric acid	USEPA Method 26A analyze as blank		Final volume of 1N H2SO4 (ml)	Final volume of H2O (ml)		USEPA Method 18 analyze for methylene chloride and trichloroethylene				
	130112B-1-M26A/BH1	1	1.18.13	14:00	200	x			100	93						
	130112B-2-M26A/BH1	1	1.18.13	14:00	200	x			100	121						
	130112B-3-M26A/BH1	1	1.18.13	14:00	200	x			100	112						
	130112B-BL-M26A/BH1	1	1.21.13	12:35	200		x		100	100						
	130112A-1-M18/Bag	1 bag	1.18.13	14:00								x				
	130112A-2-M18/Bag	1 bag	1.18.13	14:00								x				
	130112A-3-M18/Bag	1 bag	1.18.13	14:00								x				
	130112B-1-M18/Bag	1 bag	1.18.13	14:00								x				
	130112B-2-M18/Bag	1 bag	1.18.13	14:00								x				
	130112B-3-M18/Bag	1 bag	1.18.13	14:00								x				

23-Jan-13 11:30
Clayton Johnson
B310886
FW AIR-001

TAT Requirement
STD 10 Business day ✓
Rush 5 Business day
Rush 2 Business day
Rush 1 Business day
Other (specify):

PROJECT INFORMATION
Project #: 130112
Name: 130112
PO #: 1445
Maxxam Quote #:
Maxxam Contact:

REPORTING REQUIREMENTS
Summary Report only
Summary Report & Raw Data Package ** ✓
** additional cost may apply

PROJECT SPECIFIC COMMENTS
All samples were split in half

* Initial Impinger charge volumes are required before the following analysis can be started: Method 26, CTM-027 & Method 6

Client Signature
Affiliation: Air Compliance Testing, Inc.
Date/Time: 1.23.13 / 16:30

Received by: FANG WANG
Affiliation:
Date/Time: 2013/01/23 11:30

Method 23 / TO9A
2005 WHO ☐
1989 NATO TEF ☐
1998 WHO ☐
TEF x DL ☐
TEF x 0 DL ☐
TEF x 0.5 DL ☐

TEST DATA

Number of Test Runs	3			
Traverse Points	16			
	Run 1	**Run 2**	**Run 3**	**Average**
Stack Cross-Sectional Diameter 1 (**circular**) (in)	47.1	47.1	47.1	47.1
Stack Cross-Sectional Diameter 2 (**circular**) (in)	47.6	47.6	47.6	47.6
Pitot Tube Coefficient (Cp)	0.84	0.84	0.84	0.84
Barometric Pressure at Ground Level (Pbar) (in Hg)	29.45	29.45	29.45	29.45
Elevation Difference Between Ground Level and Meter Box Locations (ft)	4	4	4	4
Elevation Difference Between Ground Level and Sampling Locations (ft)	30	30	30	30
Initial Dry Gas Meter Reading (ft3)	73.697	111.562	149.144	111.468
Final Dry Gas Meter Reading (ft3)	111.236	149.008	186.670	148.971
Dry Gas Meter Calibration Factor (Gamma)	0.9941	0.9941	0.9941	0.9941
Dry Gas Meter Calibration Coefficient (Delta H@)	2.156	2.156	2.156	2.156
Total Sampling Run Time (Theta) (min)	60	60	60	60
Volume of Water Vapor Condensed in the Impingers (g)	-3.2	-4.9	-2.0	-3.4
Weight of Water Vapor Collected in Silica Gel (g)	4.8	6.2	9.3	6.8
Air Percent by Volume Carbon Dioxide in Stack Gas (%-dry)	0.0	0.0	0.0	0.0
Air Percent by Volume Oxygen in Stack Gas (%-dry)	20.0	20.0	20.0	20.0
Air Percent by Volume Nitrogen in Stack Gas (%-dry)	**80.0**	**80.0**	**80.0**	80.0
Average Pitot Rotation Angle — Port Number 1	3.8			
Average Pitot Rotation Angle — Port Number 2	10.0			
Test Run Start Time (hrmin)	1/18/2013 8:15	1/18/2013 10:15	1/18/2013 11:50	
Test Run Stop Time (hrmin)	1/18/2013 9:31	1/18/2013 11:20	1/18/2013 12:53	

DETAILED RESULTS

Stack Gas Conditions	**Run 1**	**Run 2**	**Run 3**	**Average**
Stack Cross-Sectional Area (A) (ft2)	12.335	12.335	12.335	12.335
Barometric Pressure at Sampling Location (in Hg)	29.42	29.42	29.42	29.42
Dry Molecular Weight of Stack Gas (Md) (lb/lb-mole)	28.80	28.80	28.80	28.80
Wet Molecular Weight of Stack Gas (Ms) (lb/lb-mole)	28.78	28.78	28.70	28.75
Average Absolute Stack Gas Pressure (Ps) (in Hg)	29.57	29.54	29.56	29.56
Average Stack Gas Static Pressure (ps) (in H2O)	2.10	1.60	1.90	1.87
Average Stack Gas Temperature (ts) (°F)	55.5	56.3	64.9	58.9
Average Stack Gas Temperature (Ts) (°R)	515.5	516.3	524.9	518.9
Average Stack Gas Velocity (Vs) (ft/sec)	15.53	14.77	14.83	15.04
Average Stack Gas Velocity (Vs) (ft/min)	932	886	890	902
Wet Volumetric Stack Gas Flow at Actual Conditions (Qaw) (acfm)	11,494	10,928	10,973	11,132
Wet Volumetric Stack Gas Flow at Standard Conditions (scfm)	11,637	11,034	10,905	11,192
Dry Volumetric Stack Gas Flow at Standard Conditions (Qstd) (dscfm)	11,615	11,016	10,807	11,146
Percent by Volume Moisture as measured in Stack Gas (%H2O)	0.19	0.16	0.90	0.42
Test Results				
Volume of Dry Gas Sampled at Standard Conditions (Vmstd) (dscf)	39.183	37.965	38.040	38.396
Rate of Dry Gas Sampled at Standard Conditions (dscfm)	0.653	0.633	0.634	0.640
Predicted 1-Hour Sample Volume Based on Current Sampling Rate (dscf)	39.183	37.965	38.040	38.396
Dry Mole Fraction of Flue Gas (Mfd) (1-bw/100)	0.998	0.998	0.991	0.996
Average Velocity Pressure (Delta P) (in H2O)	0.0775	0.0700	0.0692	0.0722
Average Square Root of Delta P	0.2779	0.2639	0.2625	0.2681
Average Pressure Differential of Orifice Meter (Delta H) (in H2O)	1.5000	1.5000	1.5000	1.5000
Average DGM Temperature (tm) (°F)	36.750	51.417	51.500	46.556
Average Dry Gas Meter Temperature (Tm) (°R)	496.750	511.417	511.500	506.556
Volume of Metered Gas Sample (Vm) (dry) (acf)	37.539	37.446	37.526	37.504
Post-Test Calibration (Yqa)	0.9795	0.9963	0.9943	0.9900
Post-Test/Pre-Test Calibration Factor Difference (%)	1.47	-0.22	-0.02	0.41

SAMPLING QA

Current Predicted Allowable Post-Test Leak Rate (dscfm)	0.020	0.020	0.020
Current Sampling Rate Status	**OK**	**OK**	**OK**
Count of Velocity Pressure Readings Below 0.05 in H2O	0	0	0
Sensitivity Factor for Differential Pressure Gauge (T)	1.032	1.035	1.036
Is Meter Box Manometer Adequate (Yes / No) ?	YES	YES	YES

MEASURED DATA FROM TEST RUNS

Point Count	Run #	Run Time (min)	Pitot Delta P (in H2O)	Square Root of Delta P	Orifice Delta H (in H2O)	DGM Temp OUT (°F)	Average DGM Temp (°F)	Stack Pressure (in H2O)	Stack Temp (°F)
1	1		0.08	0.283	1.50	30	30.00	2.1	55
2	1		0.07	0.265	1.50	32	32.00		55
3	1		0.09	0.300	1.50	33	33.00		56
4	1		0.07	0.265	1.50	35	35.00		56
5	1		0.08	0.283	1.50	36	36.00		56
6	1		0.07	0.265	1.50	36	36.00		56
7	1		0.06	0.245	1.50	37	37.00		56
8	1		0.07	0.265	1.50	38	38.00		54
9	1		0.08	0.283	1.50	40	40.00		55
10	1		0.09	0.300	1.50	40	40.00		55
11	1		0.09	0.300	1.50	42	42.00		56
12	1		0.08	0.283	1.50	42	42.00		56
13	1								
14	1								
15	1								
16	1								
17	2		0.05	0.224	1.50	48	48.00	1.6	54
18	2		0.06	0.245	1.50	49	49.00		55
19	2		0.08	0.283	1.50	50	50.00		55
20	2		0.08	0.283	1.50	51	51.00		55
21	2		0.08	0.283	1.50	52	52.00		55
22	2		0.08	0.283	1.50	52	52.00		56
23	2		0.06	0.245	1.50	51	51.00		55
24	2		0.07	0.265	1.50	52	52.00		57
25	2		0.07	0.265	1.50	52	52.00		58
26	2		0.06	0.245	1.50	53	53.00		58
27	2		0.07	0.265	1.50	53	53.00		59
28	2		0.08	0.283	1.50	54	54.00		58
29	2								
30	2								
31	2								
32	2								
33	3		0.06	0.245	1.50	50	50.00	1.9	62
34	3		0.06	0.245	1.50	50	50.00		65
35	3		0.07	0.265	1.50	51	51.00		65
36	3		0.08	0.283	1.50	50	50.00		65
37	3		0.08	0.283	1.50	51	51.00		66
38	3		0.08	0.283	1.50	51	51.00		66
39	3		0.07	0.265	1.50	52	52.00		63
40	3		0.06	0.245	1.50	52	52.00		65
41	3		0.07	0.265	1.50	53	53.00		65
42	3		0.06	0.245	1.50	52	52.00		65
43	3		0.06	0.245	1.50	53	53.00		65
44	3		0.08	0.283	1.50	53	53.00		67
45	3								
46	3								
47	3								
48	3								

TEST DATA

DETAILED RESULTS

	Run 1	Run 2	Run 3	Average
Emission Results:				
Methylene Chloride Mass Emission Rate (lb/hr)	4.56	3.38	3.10	3.68
Tetrachloroethylene Mass Emission Rate (lb/hr)	8.05	25.50	32.85	22.13
CONCENTRATION CALCULATIONS				
Total Mass of GOC in Each Sample				
Methylene Chloride Molecular Weight (g/g-mole)	84.93	84.93	84.93	84.93
Tetrachloroethylene Molecular Weight (g/g-mole)	165.83	165.83	165.83	165.83
Total Measured Methylene Chloride in Sample (ppmvw)	24.3	19.0	17.6	20.30
Total Measured Tetrachloroethylene in Sample (ppmvw)	20.9	69.8	91.0	60.57
Calculate the GOC Concentration				
Corrected Methylene Chloride Concentration (ppmvw)	29.6	23.2	21.5	24.8
Corrected Tetrachloroethylene Concentration (ppmvw)	26.8	89.5	116.7	77.6
Corrected Methylene Chloride Concentration (ppmvd)	29.7	23.2	21.7	24.9
Corrected Tetrachloroethylene Concentration (ppmvd)	26.8	89.6	117.7	78.1
Calculate the Recovery for Each GOC				
Fraction of Spiked Methylene Chloride Recovered (R)	0.82	0.82	0.82	0.820
Fraction of Spiked Tetrachloroethylene Recovered (R)	0.78	0.78	0.78	0.780

TEST DATA

Sample Train Leak Check Results

	Run 1	Run 2	Run 3	Average
Allowable Pressure Loss (mmHg)	93.5	93.5	93.5	93.50
Actual Pressure Loss (mmHg)	38	37	44	39.67
Sample Train Leak Rate as a Percentage of Allowable (%)	40.64	39.57	47.06	42.424

Laboratory Analysis Data

	Run 1	Run 2	Run 3	Average
Tank Volume Sampled (ml)	4,374	4,739	5,066	4,726
Tank Volume Sampled (liters, dry)	4.374	4.739	5.066	4.726
Concentration of Noncondensables (ppmvd as Carbon)	70	137	106	104
Concentration of Condensables (ppmvd as Carbon)	452	376	557	462
Concentration of Total Gaseous Nonmethane Organics (TGNMO) (ppmvd as Carbon)	523	513	663	566
TGNMO Mass Concentration (mg of Carbon/cu.meter)	260.9	256.2	330.9	283
Carbon Dioxide (CO2) Concentration (ppmv)	4,839	4,902	10,636	6,792
Carbon Monoxide (CO) Concentration (ppmv)	9	6	21	12
Methane (CH4) Concentration (ppmv)	2	2	4	3

Emission Results

	Run 1	Run 2	Run 3	Average
Mass Emission Rate of TGNMOs (lb/hr as Carbon)	11.361	10.570	13.401	11.778

EPA Methods 1, 2, 3, 4, 18, and 25 Nomenclature and Sample Calculations
Run No. - 1

Constants

CO_2F_{wt}= 44.0	in wg= 0.073529	NO_2F_{wt}= 46.01	$HClF_{wt}$= 36.46
O_2F_{wt}= 32.0	gr= 0.000142857	COF_{wt}= 28.01	SO_2F_{wt}= 64.06
CON_2F_{wt}= 28.0	mmBtu= 1000000 Btu	$H_2SO_4F_{wt}$= 98.08	Cl_2F_{wt}= 70.91
H_2OF_{wt}= 18.0	CF_{wt}= 12.011	T_{std}= 528	P_{std}= 29.92
	PF_{wt}= 44.0962	$MDCF_{wt}$= 84.93	

Stack Variables

Cp =	0.84		pitot tube coefficient (dimensionless)
P_{bar} =	29.45	in. Hg	barometric pressure
E_{box} =	4	ft	elevation difference between ground level and meter box
E_{sam} =	30	ft	elevation difference between ground level and sampling ports
γ =	0.9941		gamma, dry gas meter calibration factor (dimensionless)
θ =	60.0	min	net run time (minutes)
V_{lc} =	1.6	g	total mass of liquid collected in impingers (g)
$\%CO_2$ =	0.00	%	percent CO_2 by volume (dry basis) (dimensionless)
$\%O_2$ =	20.00	%	percent O_2 by volume (dry basis) (dimensionless)
$\%N_2$ =	80.00	%	percent N_2 by volume (dry basis) (dimensionless)
A =	12.3353	ft^2	stack cross-sectional area
P_g =	2.10	in. H_2O	flue gas static pressure
T_{savg} =	515.50	R	average absolute flue gas temperature (460R+tsavg °F)
$SQ\Delta P_{avg}$ =	0.28	in. wg	average square root ΔP
ΔH =	1.50	in. wg	average pressure differential of orifice meter
T_m =	496.75	R	dry gas meter temperature (460R+tsavg °F)
V_m =	37.54	ft^3	volume of metered gas sample (dry actual cubic feet)

Calculated Stack Variables

Barometric pressure at sampling location

NOTE: Barometric pressure recorded at ground level

$$P_{sam} = P_{bar} - [(E_{sam} / 100 \text{ ft}) * 0.1 \text{ in. Hg}]$$

$$P_{sam} = 29.45 - ((30.0 / 100) * 0.1)$$

$$P_{sam} = 29.42 \text{ in. Hg}$$

Volume of dry gas sampled at standard conditions (dscf)

$$V_{mstd} = \gamma * Vm * [P_{bar} - ([(E_{box} / 100 \text{ ft}) * 0.1 \text{ in. Hg}] + (\Delta H / 13.6)) / P_{std}] * (T_{std} / T_m)$$

$$V_{mstd} = 0.9941 * 37.539 * ((29.45 - ((4.0 / 100) * 0.1) + (1.5000 / 13.6)) / 29.92) * (528.0 / 496.750)$$

$$V_{mstd} = 39.183 \text{ ft}^3$$

Volume of water vapor at standard conditions (68 °F, scf)

$$V_{wstd} = (0.04715 \text{ ft}^3/\text{g}) * Vlc$$

$$V_{wstd} = (0.04715 * 1.6)$$

$$V_{wstd} = 0.1 \text{ ft}^3$$

Percent moisture by volume as measured in flue gas

$\%H_2O$ (Measured) = $100 * [V_{wstd} / (V_{wstd} + V_{mstd})]$

$\%H_2O$ (Measured) = 100 * (0.075 / (0.075 + 39.183))

$\%H_2O$ (Measured) = 0.19

$\%H_2O$ (Saturated) = $(100 / P_{sam}) * 10 \wedge (6.6911 - (3144 / (T_{savg} + 390.86 - 460)))$

$\%H_2O$ (Saturated) = (100 / 29.574412) * 10 ^ (6.6911 - (3144 / (515.500000 + 390.86 - 460)))

$\%H_2O$ (Saturated) = 1.50

$\%H_2O$ = 0.19

Absolute flue gas pressure

$P_s = P_{sam} + (Pg / 13.6)$

P_s = 29.42 + (2.10 / 13.6)

P_s = 29.57 in. Hg

Dry mole fraction of flue gas (dimensionless)

$M_{fd} = 1 - (\%H_2O / 100)$

M_{fd} = 1 - (0.19 / 100)

M_{fd} = 0.998

Dry molecular weight of flue gas (lb/lb-mole)

$M_d = [(\%CO_2 / 100) * 44.0] + [(\%O_2 / 100) * 32.0] + [((100 - \%CO_2 - \%O_2) / 100) * 28.0]$

M_d = ((0.00 / 100) * 44.0) + ((20.00 / 100) * 32.0) + (((100 - 0.00 - 20.00) / 100) * 28.0)

M_d = 28.80 lb/lb-mole

M_d = 28.80

Wet molecular weight of flue gas (lb/lb-mole)

$M_s = M_d * M_{fd} + (H_2OF_{wt} * (\%H_2O / 100))$

M_s = 28.800 * 0.998 + 18.00 * (0.19 / 100)

M_s = 28.78 lb/lb-mole

Average flue gas velocity (ft/sec)

$v_s = 85.49 * Cp * (SQ\Delta P_{avg}) * (T_{avg} / (P_s * M_s))^{0.5}$

v_s = 85.49 * 0.84 * (0.2779) * (515.50 / (29.574 * 28.779)) ^ 0.5

v_s = 15.53 ft/sec

Wet volumetric flue gas flow rate at actual conditions (acfm)

$Q_{aw} = v_s * A * 60$ sec/min

Q_{aw} = 15.530 * 12.335 * 60

Q_{aw} = 11,494 ft^3/min

Wet volumetric flue gas flow rate at standard conditions (scfm)

$Q_{sdw} = v_s * A * (T_{std} / T_{savg}) * (P_s / P_{std}) * 60$ sec/min

$Q_{sdw} = 15.530 * 12.335 * (528.0 / 515.500) * (29.574 / 29.92) * 60$

$Q_{sdw} =$ 11,637 ft^3/min

Dry volumetric flue gas flow rate at standard conditions (dscfm)

$Q_{sd} = M_{fd} * v_s * A * (T_{std} / T_{savg}) * (P_s / P_{std}) * 60$ sec/min

$Q_{sd} = 0.998 * 15.5302 * 12.3353 * (528.0 / 515.500) * (29.574 / 29.92) * 60$

$Q_{sd} =$ 11,615 ft^3/min

Method 18 Calculations

Methylene Chloride Concentration

MDCppmvw = 29.634146

MDCppmvd = (MDCppmvw / Mfd)

MDCppmvd = 29.69 ppmvd

Methylene Chloride mass emission rate (lb/hr)

MERMDC = (60 min/hr * MDCppmvd * $MDCF_{wt}$ * lb * Q_{sd}) / (385.3 ft^3 * 10^6)

MERMDC = 4.56 lb/hr

Method 25 Calculations

TGNMO concentration (ppmvd as carbon)

TGNMOppmvd = 523.00 ppmvd as carbon

TGNMO mass emission rate (lb/hr as carbon)

MERTGNMO = (60 min/hr * TGNMO ppmvd * CF_{wt} * lb * Q_{sd}) / (385.3 ft^3 * 10^6)

MERTGNMO = 11.361 lb/hr (as carbon)

Method Field Data

Eff: Date: 7/16/12
Rev No. 0
Issued by: Quality Manager

Plant: Clean Harbors Recycling Services of Ohio L — Run Time Start: 8:16 — Tank # 130112 A 1 - M25/TK (172)

Location: Blue Room, Cooker Room, Still Room, J003 — Run Time Stop: 9:31 — Trap # 130112 A - 1 - M25/TP (1080)

Purge Time Start / Stop: 8:00 / 8:15 — Run # 1 — Train ID: T - M25 - 009 — Pressure Gauge ID: T - DPG - 009

Barometric Pressure (at time of tank reading)		
Initial:	748	mmHg
Final:	750	mmHg

Absolute Tank Pressure		
Initial:	001	mmHg
Final:	522	mmHg

Tank Vacuum (Barometric - Tank Pressure)*		
Initial:	747	mmHg
Final:	228	mmHg

Date / Time of Pressure Readings	
Initial:	1/18/13 07:00
Final:	1/18/13 10:00

Tank Temperature		
Initial:	35	°F
Final:	36	°F

Initial Trap CO_2 Concentration:	0 ppm
Trap on Dry Ice >30min Prior to Run	Yes / No
Train Pre-Heated >30min Prior to Purge	Yes / No

Time (min)	Vacuum (inHg)	Flowmeter Setting ** (cc/min)	Probe Temperature (≥265° F)	Filter Temperature (250° ± 5° F)	Comments
0	27	70	276	262	
5	27	70	276	254	
10	25	70	279	245	
15	23.5	70	279	251	
20	22	70	280	250	
25	20.6	70	281	251	
30	19.5	70	283	251	
35	17.8	70	282	250	
40	16.2	70	288	251	
45	15	70	282	251	
50	13	70	289	250	
55	11.2	70	270	251	
60	10.2	—	—	—	

Pre-Test Leak Check

ΔP = Allowable Pressure Loss (mmHg)
V_t = Sample Train Volume (56 cc)
F = Sample Flow Rate (cc / min)
Θ = Leak Check Duration (10 min)
P_b = Barometric Pressure (mmHg)

ΔP = (F * P_b * Θ) / (V_t * 100)

ΔP = (70)*(748)*(10 min) / (56)* 100

P_b = 748 mmHg

System Pressure Start 0 mmHg
System Pressure End 38 mmHg
Actual Pressure Loss* 38 mmHg
*(system pressure end - start)

ΔP = 93.5 mmHg

Target pressure*: 93.5 mmHg
*(ΔP + system pressure start)

Leak% = (Actual Pressure Loss / ΔP) * 100
Leak% = 40.6

*Note: Initial Tank Vacuum and Train Vacuum during leak check must be within 10mmHg absolute. Vt = 91cc when two traps are utilized.
** Allowable sample rate range: 70 and 100 cc/min. Sampling rate should be constant (±10%)
ΔP = Pb x 0.125, for single trap, 70 cc sample flow rate, 10-min leak check or Pb x 0.077, for two traps, 70 cc sample flow rate, 10-min leak check.

Job Number: 130112 A
Done By / Date: AS / 1/18/2013
Final Check By / Date: [illegible] / 1/28/13

Air Compliance Testing, Inc.
D:\TESTING\ACT Test Methods\M025\Method 25
(Method 25-Field Data Sheet) 1/9/2013
1 of 1

Method Field Data

Eff Date: 7/16/12
Rev No. 0
Issued L... ...ality Manager

Plant: Clean Harbors Recycling Services of Ohio L — Run Time Start: 10:15 — Tank # 130112 A - 2 - M25/TK (1957)

Location: Blue Room, Cooker Room, Still Room, J003 — Run Time Stop: 11:20 — Trap # 130112 A - 2 - M25/TP (1104)

Purge Time Start / Stop: 10:00 / 10:15 — Run # 2 — Train ID: T - M25 - 004 — Pressure Gauge ID: T - DPG - 005

Barometric Pressure (at time of tank reading)		
Initial:	748	mmHg
Final:	748	mmHg

Absolute Tank Pressure		
Initial:	1001	mmHg
Final:	568	mmHg

Tank Vacuum (Barometric - Tank Pressure)*		
Initial:	747	mmHg
Final:	180	mmHg

Date / Time of Pressure Readings		
Initial:	1-18-13	07:00
Final:	1-18-13	12:00

Tank Temperature		
Initial:	35	°F
Final:	36	°F

Initial Trap CO_2 Concentration:	<10	ppm
Trap on Dry Ice >30min Prior to Run	(Yes)	No
Train Pre-Heated >30min Prior to Purge	(Yes)	No

Time (min)	Vacuum (inHg)	Flowmeter Setting ** (cc/min)	Probe Temperature (≥265° F)	Filter Temperature (250° ± 5° F)	Comments
0	26.5	70	272	255	
5	25.5	70	276	250	
10	24.5	70	280	251	
15	23.0	70	280	250	
20	21.4	70	279	250	
25	19.5	70	280	250	
30	18.0	70	280	249	Pause 10:45 (Port Change)
35	16.4	70	279	250	Resume 10:50
40	14.9	70	280	250	
45	13.4	70	280	250	
50	11.5	70	281	250	
55	9.5	70	280	250	
60	8.4	—	—	—	

Pre-Test Leak Check

ΔP = Allowable Pressure Loss (mmHg)
V_t = Sample Train Volume (56 cc)
F = Sample Flow Rate (cc / min)
Θ = Leak Check Duration (10 min)
P_b = Barometric Pressure (mmHg)

ΔP = (F * P_b * Θ) / (V_t * 100)

ΔP = (70)*(748)*(10 min) / (56)* 100

P_b = 748 mmHg

System Pressure Start 0 mmHg
System Pressure End 37 mmHg
Actual Pressure Loss* 37 mmHg
*(system pressure end - start)

ΔP = 93.5 mmHg

Target pressure*: 93.5 mmHg
*(ΔP + system pressure start)

Leak% = (Actual Pressure Loss / ΔP) * 100
Leak% = 39.6

*Note: Initial Tank Vacuum and Train Vacuum during leak check must be within 10mmHg absolute. Vt = 91cc when two traps are utilized.
** Allowable sample rate range: 70 and 100 cc/min. Sampling rate should be constant (±10%)
ΔP = Pb x 0.125, for single trap, 70 cc sample flow rate, 10-min leak check or Pb x 0.077, for two traps, 70 cc sample flow rate, 10-min leak check.

Job Number: 130112 A
Done By / Date: AS / 1.18.2013
Final Check By / Date: BKC / 6/4/13

Air Compliance Testing, Inc.
D:\TESTING\ACT Test Methods\M025\Method 25
(Method 25-Field Data Sheet) 1/9/2013
1 of 1

Method Field Data

Eff Date: 7/16/12
Rev No. 0
Issued by: Quality Manager

Plant: Clean Harbors Recycling Services of Ohio L
Run Time Start: 12:10
Tank # 130112 A - 3 - M25/TK (~~196~~) 171
Location: Blue Room, Cooker Room, Still Room, J003
Run Time Stop: ~~7:35~~ 13:10
Trap # 130112 A - 3 - M25/TP (1021)
Purge Time Start / Stop: 11:35 / ~~12:35~~ 11:50 ~~12:35~~
Run # 3
Train ID: T - M25 - 009
Pressure Gauge ID: T - DPG - 009

Barometric Pressure (at time of tank reading)		
Initial:	748	mmHg
Final:	748	mmHg

Absolute Tank Pressure		
Initial:	000	mmHg
Final:	0000	mmHg

Tank Vacuum (Barometric - Tank Pressure)*		
Initial:	748	mmHg
Final:	142	mmHg

Date / Time of Pressure Readings		
Initial:	1-18-13	07:00
Final:	1-18-13	14:00

Tank Temperature		
Initial:	35	°F
Final:	36	°F

Initial Trap CO_2 Concentration:	<10	ppm
Trap on Dry Ice >30min Prior to Run	(Yes)	No
Train Pre-Heated >30min Prior to Purge	(Yes)	No

Time (min)	Vacuum (inHg)	Flowmeter Setting ** (cc/min)	Probe Temperature (≥265° F)	Filter Temperature (250° ± 5° F)	Comments
0	23	70	275	250	
5	20.5	70	267	249	
10	19.3	70	285	250	
15	17.9	70	277	250	
20	15.9	70	279	250	
25	14.2	70	282	250	
30	12.5	70	282	250	
35	11.0	70	282	250	
40	9.5	70	282	250	
45	8.9	70	277	250	
50	8.0	70	285	255	
55	7.1	70	281	253	
60	6.5	—	—	—	

Pre-Test Leak Check

ΔP = Allowable Pressure Loss (mmHg)
V_t = Sample Train Volume (56 cc)
F = Sample Flow Rate (cc / min)
Θ = Leak Check Duration (10 min)
P_b = Barometric Pressure (mmHg)

ΔP = (F * P_b * Θ) / (V_t * 100)
ΔP = (70) * (748) * (10 min) / (56) * 100

P_b = 748 mmHg

System Pressure Start 0 mmHg
System Pressure End 47 mmHg
Actual Pressure Loss* 47 mmHg
*(system pressure end - start)

ΔP = 935 mmHg

Target pressure*: 935 mmHg
*(ΔP + system pressure start)

Leak% = (Actual Pressure Loss / ΔP) * 100
Leak% = 47.06

*Note: Initial Tank Vacuum and Train Vacuum during leak check must be within 10mmHg absolute. Vt = 91cc when two traps are utilized.
** Allowable sample rate range: 70 and 100 cc/min. Sampling rate should be constant (±10%)
ΔP = Pb x 0.125, for single trap, 70 cc sample flow rate, 10-min leak check or Pb x 0.077, for two traps, 70 cc sample flow rate, 10-min leak check.

Job Number: 130112 A
Done By / Date: AS / 1-18-13
Final Check By / Date: [illegible] 1/18/13

Air Compliance Testing, Inc.
D:\TESTING\ACT Test Methods\M025\Method 25
(Method 25-Field Data Sheet) 1/9/2013
1 of 1

Method 18 Integrated Bag

Effective Date: 7/16/12
Rev No. 0
Issued by: Quality Manager

Plant Clean Harbors Location Inlet Duct Date 1/18/13

Sample Bag Number Run 1 Operator AS

Extraction Technique (circle one) Evacuation Box CEMS Rack

Sample Size Required 20 L ml

Sample Time Allowed 60 min

Pump Number 2

Sample Flow Rate .3 L/m ~~ml/min~~

End Time 931

Start Time 815

Actual SampleTime 60 min

Actual Sample Size Obtained 18L ml
(sample flow rate x actual sample time)

130112A

Ste 2/6/13

Air Compliance Testing, Inc.
D:\Testing\ACT Test Methods\M018\Method 18
(Method 18-Integrated Bag) 2/5/2013
1 of 1

Method 18 Integrated Bag

Effective Date: 7/16/12
Rev No. 0
Issued by: Quality Manager

Plant Clean Harbors Location Inlet Duct Date 1/18/13

Sample Bag Number Run 2 Operator AS

Extraction Technique (circle one) Evacuation Box CEMS Rack

Sample Size Required 20 L ml

Sample Time Allowed 60 min

Pump Number 2

Sample Flow Rate .3 L/m ~~ml/min~~

End Time 1120

Start Time 1015

Actual SampleTime 60 min

Actual Sample Size Obtained 18 L ml
(sample flow rate x actual sample time)

130112A

SHC 2/6/13

Air Compliance Testing, Inc.
D:\Testing\ACT Test Methods\M018\Method 18
(Method 18-Integrated Bag) 2/5/2013
1 of 1

Method 18 Integrated Bag

Effective Date: 7/16/12
Rev No. 0
Issued by: Quality Manager

Plant Clean Harbors Location Inlet Duct Date 1/18/13

Sample Bag Number Run 3 Operator AS

Extraction Technique (circle one) Evacuation Box CEMS Rack

Sample Size Required 20 L ml

Sample Time Allowed 60 min

Pump Number 2

Sample Flow Rate .3 L/m ~~ml/min~~

End Time 1253

Start Time 1150

Actual SampleTime 60 min

Actual Sample Size Obtained 18 L ml
(sample flow rate x actual sample time)

130 112 A

Air Compliance Testing, Inc.
D:\Testing\ACT Test Methods\M018\Method 18
(Method 18-Integrated Bag) 2/5/2013
1 of 1

SAC 2/6/13

Method 4 Field Data

Effective Date: 1/16/12
Rev No. 0
Issued ity Manager

Company	Clean Harbors Recycling Services of Ohio L	Meter box no.	T-MTB- 006	Gamma .9941	ΔH@ 2.156 Cp
Location	Blue Room, Cooker Room, Still Room, J003, and	Pump no.	T-PMP- 006	Barometric pressure, in.Hg	29.45
Run no.	1	Barometer no.	T- DAC-009	Ambient temperature, °F	22
Test start time	08:15	Probe no.	T-PRB- Moisture	Filter box temperature setting, °F	248 ± 25
Test stop time	9:31	Filter box no.	T-FLB- 002	Probe temperature setting, °F	248 ± 25
Pre-test leak rate @ 15in.Hg	.000	Impinger box no.	T-IMB- 004	Orsat flow rate setting, SCFH	0.3
Post-test leak rate @ 50 in.Hg	0.000	Umbilical cord no.	T-UMC- 102	Orsat bag no.	13-12-A-1-M3 / A13
Pre-test pitot leak check - total	static	Umbilical adapter no.	T-UMA- 004		
Post-test pitot leak check - total	static				

POINT	CLOCK TIME min	DRY GAS METER CF	PITOT In. H_2O ΔP	ORIFICE ΔH In. H_2O DESIRED	ORIFICE ΔH In. H_2O ACTUAL	PROBE TEMP °F	STACK TEMP °F	DRY GAS TEMP °F INLET	DRY GAS TEMP °F OUTLET	FILTER BOX TEMP °F	IMPINGER TEMP °F	PUMP VAC in.Hg	ORSAT FLOW SCFH	STATIC PRESSURE ± in.H_2O
1	0	73.697	/	1.5	1.5	240	/	/	30	246	23	3.0	0.3	/
	5	77.53	/	1.5	1.5	242	/	/	32	244	23	3.0	0.3	/
	10	80.21	/	1.5	1.5	241	/	/	33	243	25	3.0	0.3	/
	15	83.39	/	1.5	1.5	226	/	/	35	248	27	3.0	0.3	/
	20	86.465	/	1.5	1.5	228	/	/	36	249	29	3.0	0.3	/
	25	89.710	/	1.5	1.5	227	/	/	36	249	31	3.0	0.3	/
	30	92.67	/	1.5	1.5	228	/	/	37	252	33	3.5	0.3	/
	35	95.83	/	1.5	1.5	227	/	/	38	254	33	3.5	0.3	/
	40	98.835	/	1.5	1.5	228	/	/	40	254	35	3.5	0.3	/
	45	102.00	/	1.5	1.5	230	/	/	40	254	36	3.5	0.3	/
	50	105.02	/	1.5	1.5	227	/	/	42	256	38	3.5	0.3	/
	55	108.21	/	1.5	1.5		/	/	42	255	40	3.5	0.3	/
Final	60	111.236												

Comments: Pause 8:45
Resume 9:01
time 30:00
meter 92.670

Test Observers -

Job Number: 130112 A
Done By / Date: TB / 1/12/2013
Final Check By / Date: [illegible] / 6/4/13

Method 4 Field Data

Effective Date: 7/16/12
Rev No. 0
Issued ity Manager

Company	Clean Harbors Recycling Services of Ohio L	Meter box no.	T-MTB- 006	Gamma 0.9941 ΔH@ 2.156	Cp 0.84
Location	Blue Room, Cooker Room, Still Room, J003, and	Pump no.	T-PMP- 006	Barometric pressure, in.Hg 29.45	
Run no. 2		Barometer no.	T- DPG-009	Ambient temperature, °F 29.0	
Test start time 10:15		Probe no.	T-PRB- 4ft Multi-Point	Filter box temperature setting, °F 248±25	
Test stop time 11:20		Filter box no.	T-FLB- 002	Probe temperature setting, °F 248±25	
Pre-test leak rate @ 15in.Hg 0.020		Impinger box no.	T-IMB-	Orsat flow rate setting, SCFH 0.3	
Post-test leak rate @ 50 in.Hg 0.020		Umbilical cord no.	T-UMC- 102	Orsat bag no. 130112A-2-M3/TB	
Pre-test pitot leak check - total — static —		Umbilical adapter no.	T-UMA-		
Post-test pitot leak check - total — static					

POINT	CLOCK TIME min	DRY GAS METER CF	PITOT In. H_2O ΔP	ORIFICE ΔH In. H_2O DESIRED	ORIFICE ΔH In. H_2O ACTUAL	PROBE TEMP °F	STACK TEMP °F	DRY GAS TEMP °F INLET	DRY GAS TEMP °F OUTLET	FILTER BOX TEMP °F	IMPINGER TEMP °F	PUMP VAC in.Hg	ORSAT FLOW SCFH	STATIC PRESSURE ± in.H_2O
	0	111.562	—	1.5	1.5	227	—	—	48	267	30	3.5	3.0	—
	5	114.82	—	1.5	1.5	229	—	—	49	266	30	3.5	3.0	—
	10	115.87	—	1.5	1.5	228	—	—	50	270	31	3.5	3.0	—
	15	120.97	—	1.5	1.5	230	—	—	51	269	32	3.5	3.0	—
	20	124.085	—	1.5	1.5	228	—	—	52	268	36	3.5	3.0	—
	25	127.22	—	1.5	1.5	229	—	—	52	270	39	3.5	3.0	—
	30	130.345	—	1.5	1.5	230	—	—	51	270	42	3.5	3.0	—
	35	133.45	—	1.5	1.5	228	—	—	52	270	44	3.5	3.0	—
	40	136.56	—	1.5	1.5	227	—	—	52	272	45	3.5	3.0	—
	45	139.74	—	1.5	1.5	225	—	—	53	269	47	3.5	3.0	—
	50	142.81	—	1.5	1.5	227	—	—	53	269	49	3.5	3.0	—
	55	145.97	—	1.5	1.5	228	—	—	54	270	52	3.5	3.0	—
														—
Final	60	149.008												

Comments: Pause 10:45
Resume 10:50
timer 3600
meter 130.345

Test Observers -

Job Number: 130112 A
Done By / Date: PB / 1.18.2013
Final Check By / Date: SS / 2-15-13

Method 4 Field Data

Effective Date: 7/16/12
Rev No. 0
Issued ity Manager

Company	Clean Harbors Recycling Services of Ohio L	Meter box no.	T-MTB- 006	Gamma .9941	ΔH@ 2.156 Cp
Location	Blue Room, Cooker Room, Still Room, J003, and	Pump no.	T-PMP- 006	Barometric pressure, in.Hg	29.45
Run no.	3	Barometer no.	T- D86-005	Ambient temperature, °F	33
Test start time	11:50	Probe no.	T-PRB- 4PL Moisture	Filter box temperature setting, °F	248 ± 25
Test stop time	12:53	Filter box no.	T-FLB- 002	Probe temperature setting, °F	248 ± 25
Pre-test leak rate @ 15in.Hg	0.002	Impinger box no.	T-IMB- 004	Orsat flow rate setting, SCFH	0.3
Post-test leak rate @ 5 in.Hg	0.002	Umbilical cord no.	T-UMC- 102	Orsat bag no.	130112A-3-M3/M3
Pre-test pitot leak check -	total / static	Umbilical adapter no.	T-UMA- 004		
Post-test pitot leak check -	total / static				

POINT	CLOCK TIME min	DRY GAS METER CF	PITOT In. H_2O ΔP	ORIFICE ΔH In. H_2O DESIRED	ORIFICE ΔH In. H_2O ACTUAL	PROBE TEMP °F	STACK TEMP °F	DRY GAS TEMP °F INLET	DRY GAS TEMP °F OUTLET	FILTER BOX TEMP °F	IMPINGER TEMP °F	PUMP VAC in.Hg	ORSAT FLOW SCFH	STATIC PRESSURE ± in.H_2O
1	0	149.144	/	1.5	1.5	227	—	—	50	262	44	4.0	0.3	—
	5	152.82	/	1.5	1.5	229	—	—	50	264	44	4.0	0.3	—
	10	155.66	/	1.5	1.5	230	—	—	51	267	43	4.0	0.3	—
	15	158.82	/	1.5	1.5	228	—	—	50	265	45	3.5	0.3	—
	20	161.92	/	1.5	1.5	227	—	—	51	267	48	3.5	0.3	—
	25	165.06	/	1.5	1.5	228	—	—	51	269	50	3.5	0.3	—
	30	168.10	/	1.5	1.5	226	—	—	52	268	52	3.5	0.3	—
	35	171.265	/	1.5	1.5	227	—	—	52	267	53	3.5	0.3	—
	40	174.50	/	1.5	1.5	229	—	—	53	268	48	3.5	0.3	—
	45	177.355	/	1.5	1.5	230	—	—	52	268	44	3.5	0.3	—
	50	180.48	/	1.5	1.5	228	—	—	53	267	43	3.5	0.3	—
	55	183.575	/	1.5	1.5	227	—	—	53	266	43	3.5	0.3	—
Final	60	186.670												

Comments: Pause 12:20
Resume 12:23
time 30:00
meter 168.10

Test Observers -

Job Number: 130112 A
Done By / Date: PB / 1.18.2013
Final Check By / Date: SS / 2-15-13

Method 4 Moisture Recovery

Effective Date: 7/16/12
Rev No. 0
Issued by: Quality Manager

Company Name Clean Harbors Recycling Services of (Location Blue Room, Cooker Room, Still Room, J003, and P

Prepared By AS2 Date 1/16/13 Shop Balance ID ~~A-BAL~~ 005 Field Balance ID 007

Run Number	1	2	3	4
Run Date	1/18/13	1/18/13	1/18/13	
Recovery Date	1/18/13	1/18/13	1/18/13	
Recovery Time	1000	1140	1350	
Recovered By	CG	CG	CG	
Impinger Box No.	004	001	004	
Turbidity / Color (Clear, Cloudy, Suspended Particulates, etc.)	~~45~~ 50/50	50/50	50/50	
Knockout Impinger (optional)				
Final Weight (g)				
Tared Weight (g)				
Condensed H_2O (g)				
Impinger #1				
Final Weight (g)	766.8	715.0	757.5	
Tared Weight (g)	775.4	725.6	~~778.5~~ 766.8	
Condensed H_2O (g)	-8.6	-10.6	-9.3	
Impinger #2				
Final Weight (g)	730.8	728.2	736.7	
Tared Weight (g)	725.5	722.6	~~719.8~~ 730.8	
Condensed H_2O (g)	5.3	5.6	5.9	
Impinger #3				
Final Weight (g)	601.0	590.1	602.4	
Tared Weight (g)	600.9	590.1	~~594.7~~ 601.0	
Condensed H_2O (g)	0.1	0.0	1.4	
Total Condensed (g)	-3.2	-5.0	-2.0	
SILICA GEL				
Final Weight (g)	848.3	918.7	857.6	
Tared Weight (g)	843.5	912.5	~~876.2~~ 848.3	
Adsorbed H_2O (g)	4.8	@ ~~6.1~~ 6.2	9.3	
Total H_2O Collected (g)	1.6	@ ~~1.2~~ 1.3	7.3	

Job Number: 130112 A
Done By / Date: CG / 1/18/13
Final Check By / Date: [illegible] / 01/19/13

Air Compliance Testing, Inc.
D:\Testing\ACT Test Methods\M004\Method 4 (Method 4-Moisture Recovery) 1/9/2013
1 of 1

Method 4 Gravimetric Calculation for Moisture

Method 4 Sampling Train

	Run 1	Run 2	Run 3
IMPINGER #1			
Final Weight (g)	766.8	715.0	757.5
Tared Weight (g)	775.4	725.6	766.8
Condensed H_2O (ml,g)	-8.6	-10.6	-9.3
IMPINGER #2			
Final Weight (g)	730.8	728.2	736.7
Tared Weight (g)	725.5	722.5	730.8
Condensed H_2O (ml,g)	5.3	5.7	5.9
IMPINGER #3			
Final Weight (g)	601.0	590.1	602.4
Tared Weight (g)	600.9	590.1	601.0
Condensed H_2O (ml,g)	0.1	0.0	1.4
Total Condensed (ml,g)	-3.2	-4.9	-2.0
SILICA GEL			
Final Weight (g)	848.3	918.7	857.6
Tared Weight (g)	843.5	912.5	848.3
Adsorbed H_2O (ml,g)	4.8	6.2	9.3
Total H_2O Collected (ml,g)	1.6	1.3	7.3

Method 3 Fyrite Field Data

Effective Date: 7/16/12
Rev No. 0
Issued by: Quality Manager

Plant Name: Clean Harbors Recycling Services of Ohio LLC

Test Location: Blue Room, Cooker Room, Still Room, J003, and P017 Inlet Duct (A)

CO_2 Zero: (Y) / N O_2 Zero: (Y) / N

Run Number: 1			Operator: CG	
Time of Sample Collection	Time of Analysis	%CO_2 (A)	%O_2 (B)	%N_2 (100 - (A + B))
815	1002	0	20	80
931	1004	0	20	80
	1006	0	20	80
	Average	0	20	80

Analyzer I.D. - A - FYR - 001 Tedlar Bag I.D. - 130112A-1-M3/TB

Run Number: 2			Operator: CG	
Time of Sample Collection	Time of Analysis	%CO_2 (A)	%O_2 (B)	%N_2 (100 - (A + B))
1015	1147	0	20	80
1120	1149	0	20	80
	1155	0	20	80
	Average	0	20	80

Analyzer I.D. - A - FYR - 001 Tedlar Bag I.D. - 130112A-2-M3/TB

Run Number: 3			Operator: CG	
Time of Sample Collection	Time of Analysis	%CO_2 (A)	%O_2 (B)	%N_2 (100 - (A + B))
1150	1335	0	20	80
1253	1337	0	20	80
	1339	0	20	80
	Average	0	20	80

Analyzer I.D. - A - FYR - 001 Tedlar Bag I.D. - 130112A-3-M3/TB

Air Compliance Testing, Inc.
D:\TESTING\ACT Test Methods\M003\Method 3 - Fyrite
(Method 3 - Fyrite-Fyrite Field Data) 1/9/2013
1 of 1

Job Number: 130112 A
Done By / Date: CG / 1/18/13
Final Check By / Date: SHE / 2/4/13

Method 3 Dry Molecular Weight Calculation

Run 1

	%CO2	%O2	%N2	Molecular Weight	Mean Difference
	0.0	20.0	80.0	28.80	0.000
	0.0	20.0	80.0	28.80	0.000
	0.0	20.0	80.0	28.80	0.000
Average	0.00	20.00	80.00	28.80	

Run 2

	%CO2	%O2	%N2	Molecular Weight	Mean Difference
	0.0	20.0	80.0	28.80	0.000
	0.0	20.0	80.0	28.80	0.000
	0.0	20.0	80.0	28.80	0.000
Average	0.00	20.00	80.00	28.80	

Run 3

	%CO2	%O2	%N2	Molecular Weight	Mean Difference
	0.0	20.0	80.0	28.80	0.000
	0.0	20.0	80.0	28.80	0.000
	0.0	20.0	80.0	28.80	0.000
Average	0.00	20.00	80.00	28.80	

Flow Determination

Effective Date: 7/16/12
Rev No. 0
Issued by: Quality Manager

Plant Name	Clean Harbors Recycling Services of Ohio LLC		
City, State	Hebron, OH		Pitot Coefficient - 0.84
Test Location	Blue Room, Cooker Room, Still Room, J003, and P017 Inlet Duct (A)		Barometer i.D. - T - DPL-029
Pitot I.D. - T - PIT-605	Manometer I.D. - T - DPG		Umbilical I.D. - T - UMC 102
Thermocouple I.D. - T - PIT-605	Temp Display I.D. - T - DPG		Umbilical I.D. - T - MTC-510

Run Number: 1	Run Number: 2	Run Number: 3
Barometric Pressure (in.Hg): 29.45	Barometric Pressure (in.Hg): 29.45	Barometric Pressure (in.Hg): 29.45
Ambient Temperature (°F): 22	Ambient Temperature (°F): 29	Ambient Temperature (°F): 33
Date: 1-18-13	Date: 1-18-13	Date: 1-18-13
Start Time: 08:00	Start Time: 10:05	Start Time: 11:45
Finish Time: 08:10	Finish Time: 10:10	Finish Time: 11:50
Static Pressure (in.H_2O): +2.1	Static Pressure (in.H_2O): +1.6	Static Pressure (in.H_2O): +1.9
Wet Bulb (°F) / %H_2O / Time	Wet Bulb (°F) / %H_2O / Time	Wet Bulb (°F) / %H_2O / Time
Dry Bulb (°F) / %RH	Dry Bulb (°F) / %RH	Dry Bulb (°F) / %RH
Manometer Zero and Level - Yes ☑	Manometer Zero and Level - Yes ☑	Manometer Zero and Level - Yes ☑
Apparatus Leak Check - Done By: BI	Apparatus Leak Check - Done By: BI	Apparatus Leak Check - Done By: BI
Pre Impact Side - Pass ☑	Pre Impact Side - Pass ☑	Pre Impact Side - Pass ☑
Pre Static Side - Pass ☑	Pre Static Side - Pass ☑	Pre Static Side - Pass ☑

Test Point	Notes	ΔP (in.H_2O)	Temp (°F)	Test Point	Notes	ΔP (in.H_2O)	Temp (°F)	Test Point	Notes	ΔP (in.H_2O)	Temp (°F)
1		.08	55	1		.05	54	1		.06	62
2		.07	55	2		.06	55	2		.06	65
3		.09	56	3		.08	55	3		.07	65
4		.07	56	4		.08	55	4		.08	65
5		.08	56	5		.08	55	5		.08	66
6		.07	56	6		.08	56	6		.08	66
7		.06	56	7		0.06	55	7		.07	63
8		.07	54	8		0.07	57	8		.06	65
9		.08	55	9		0.07	58	9		.07	65
10		.09	55	10		0.06	58	10		.06	65
11		.09	56	11		0.07	59	11		.06	65
12		.08	56	12		0.08	58	12		.08	67
13				13				13			
14				14				14			
15				15				15			
16				16				16			
17				17				17			
18				18				18			
19				19				19			
20				20				20			
21				21				21			
22				22				22			
23				23				23			
24				24				24			
25				25				25			
Avg.				Avg.				Avg.			

Back Purge Performed - Yes / No	Back Purge Performed - Yes / No	Back Purge Performed - Yes / No
Re-measured ΔP -	Re-measured ΔP -	Re-measured ΔP -
Test Point No. - % Difference	Test Point No. - % Difference	Test Point No. - % Difference
Apparatus Leak Check - Done By: BI	Apparatus Leak Check - Done By: BI	Apparatus Leak Check - Done By: BI
Post Impact Side - Pass ☑	Post Impact Side - Pass ☑	Post Impact Side - Pass ☑
Post Static Side - Pass ☑	Post Static Side - Pass ☑	Post Static Side - Pass ☑

Air Compliance Testing, Inc.
D:\TESTING\ACT Test Methods\M002\Method 2
(Method 2-Flow Determination) 1/9/2013
1 of 1

Job Number: 130112 A
Done By / Date: BI / 1-18-13
Final Check By / Date: MC / 2/19/13

Cyclonic Flow Determination

Effective Date: 7/16/12
Rev No. 0
Issued by: Quality Manager

Plant Name	Clean Harbors Recycling Services of Ohio LLC
City, State	Hebron, OH
Test Location	Blue Room, Cooker Room, Still Room, J003, and P017 Inlet Duct (A) T-MZU-510
Pitot I.D. - T- PIT-009	Manometer I.D. - T- MTR-006 Umbilical I.D. T- UMC-102

Run Number - 1	Run Number -	Run Number -
Date - 1.17.2013	Date -	Date -
Barometric Pressure (in.Hg) : 29.09	Barometric Pressure (in.Hg) :	Barometric Pressure (in.Hg) :
Ambient Temperature (°F): 40	Ambient Temperature (°F):	Ambient Temperature (°F):
Barometer ID- DPG-009	Barometer ID-	Barometer ID-
Start Time - 16:47	Start Time -	Start Time -
Finish Time - 17:00	Finish Time -	Finish Time -
Manometer Zero and Level - Yes ☑	Manometer Zero and Level - Yes ☐	Manometer Zero and Level - Yes ☐
Apparatus Leak Check - Done By: PB	Apparatus Leak Check - Done By:	Apparatus Leak Check - Done By:
Pre Impact Side - Pass ☑	Pre Impact Side - Pass ☐	Pre Impact Side - Pass ☐
Pre Static Side - Pass ☑	Pre Static Side - Pass ☐	Pre Static Side - Pass ☐

Test Point	Notes	Yaw Angle (°)	Test Point	Notes	Yaw Angle (°)	Test Point	Notes	Yaw Angle (°)
1		0	1			1		
2		2	2			2		
3		-2	3			3		
4	SIDE	10	4			4		
5		4	5			5		
6		-5	6			6		
7	3.8	-12	7			7		
8	Bot	8	8			8		
9		8	9			9		
10	TOP	9	10			10		
11		12	11			11		
12	Avg 10.0	11	12			12		
13			13			13		
14			14			14		
15			15			15		
16			16			16		
17			17			17		
18			18			18		
19			19			19		
20			20			20		
21			21			21		
22			22			22		
23			23			23		
24			24			24		
25			25			25		
Avg.		6.9	Avg.			Avg.		

Apparatus Leak Check - Done By: PB	Apparatus Leak Check - Done By:	Apparatus Leak Check - Done By:
Post Impact Side - Pass ☑	Post Impact Side - Pass ☐	Post Impact Side - Pass ☐
Post Static Side - Pass ☑	Post Static Side - Pass ☐	Post Static Side - Pass ☐

Note: Yaw angle average is the sum of the absolute values divided by the number of measurements, and must be ≤ 20°.
Yaw angle is the angle measured from the point where zero ΔP should be obtained to the point where zero ΔP is actually obtained

Air Compliance Testing, Inc.
D:\TESTING\ACT Test Methods\M002\Method 2
(Method 2-Cyclonic Flow Determination) 1/9/2013
1 of 1

Job Number: 130112 A
Done By / Date: PB / 1.17.2013
Final Check By / Date: SMC / 2/4/13

Method 1 Preliminary Field Data-Round

Effective Date: 7/16/12
Rev No. 0
Issued by: Quality Manager

Plant: Clean Harbors Recycling Services of Ohio LLC
City, State: Hebron, OH
Location: Blue Room, Cooker Room, Still Room, J003, and P017 Inlet Duct (A)

Duct Depth (Inner Diameter):	Port 1	Port 2	Port 3	Port 4
Relative Location	Side	Top (a)		
From Far Inside Wall to Outside of Port (in.)	51.9	~~51.4~~ 51.4		
Nipple Length and/or Wall Thickness (in.)	4.3	4.3		
Nipple Protrusion (in.)	0.0	0.0 (a)		
Stack or Duct Depth (Inner Diameter) (in.)	47.6	~~47.6~~ 47.1		
Stack Outer Circumference (in.)	—	—		
Port Hole Inner Diameter (in.)	4.0	4.0		

Sample Port Access	Scaffold
Elevation of Meter Box from Ground Level (ft)	~~6~~ 4ft
Elevation of Ports from Ground Level (ft)	30ft
Number of Ports	2
Direction of Flow	←
Isokinetic Sample (Yes / No)	No
Stack Particulate Build-up (Yes / No)	½ INCH - BOTTOM OF STACK. PER AS (a)

Distance Upstream from Flow Disturbance (in.)	245
Diameters Upstream from Flow Disturbance (≥ 0.5 D_e)	5.15
Minimum Traverse Points Needed *	12

Distance Downstream from Flow Disturbance (in.)	376
Diameters Downstream from Flow Disturbance (≥ 2 D_e)	7.90
Minimum Traverse Points Needed *	12

*Circle Larger of the Two

Stack or Duct Area = (a) ~~179.52~~ 12.335 (a) ~~in.²~~ ft² EFFECTIVE AREA BECAUSE OF BUILD UP IN THE BOTTOM OF THE DUCT

Location of Points in Circular Stacks or Ducts

	4	6	8	10	12	14	16	18	20	22	24
1	6.7	4.4	3.2	2.6	2.1	1.8	1.6	1.4	1.3	1.1	1.1
2	25.0	14.6	10.5	8.2	6.7	5.7	4.9	4.4	3.9	3.5	3.2
3	75.0	29.6	19.4	14.6	11.8	9.9	8.5	7.5	6.7	6.0	5.5
4	93.3	70.4	32.3	22.6	17.7	14.6	12.5	10.9	9.7	8.7	7.9
5		85.4	67.7	34.2	25.0	20.1	16.9	14.8	12.9	11.6	10.5
6		95.6	80.6	65.8	35.6	26.9	22.0	18.8	16.5	14.6	13.2
7			89.5	77.4	64.4	36.6	28.3	23.6	20.4	18.0	16.1
8			96.8	86.4	75.0	63.4	37.5	29.6	25.0	21.8	19.4
9				91.8	82.3	73.1	62.5	38.2	30.6	26.2	23.0
10				97.4	88.2	79.9	71.7	61.8	38.8	31.5	27.2
11					93.3	85.4	78.0	70.4	61.2	39.3	32.3
12					97.9	90.1	83.1	76.4	69.4	60.7	39.8
13						94.3	87.5	81.2	75.0	68.5	60.2
14						98.2	91.5	85.4	79.6	73.8	67.7
15							95.1	89.1	83.5	78.2	72.8
16							98.4	92.5	87.1	82.0	77.0
17								95.6	90.3	85.4	80.6
18								98.6	93.3	88.4	83.9
19									96.1	91.3	86.8
20									98.7	94.0	89.5
21										96.5	92.1
22										98.9	94.5
23											96.8
24											98.9

Note:
1) Stacks having a diameter greater than 24in, shall have no traverse points located within 1.0in of the Stack walls.

2) Stacks having a diameter less than or equal to 24in, shall have no traverse points located within .50in of the Stack walls.

3) Add nipple protrusion length to Point 1 only. Actual nipple length = (length - protrusion)

Relocate to a distance equal to the inside diameter of the nozzle being used or to the above minimum distances, whichever is larger.

Air Compliance Testing, Inc.
D:\TESTING\ACT Test Methods\M001\Method 1 (Method 1-Preliminary Field Data-Round) 1/9/2013
1 of 1

Job Number: 130112 A
Done By / Date: AS / 1.17.13
Final Check By / Date: [illegible] / [illegible]

Port Number	1	2
Relative Location	Side	Top
From Far Wall to Outside of Port (in.)	51.90	51.40
Nipple Length or Wall Thickness (in.)	4.30	4.30
Port Protrusion Length (opt) (in.)	0.00	0.00
Depth of Stack or Duct (in.)	47.60	47.10
Stack or Duct Type	Elliptical	
Port Hole Inner Diameter (in.)	4.0	
Stack or Duct Width (If Rectangular) (in.)		#N/A
Stack Outer Circumference (in.)		
Number of Ports	2.0	
Elevation of Meter Box from Ground Level (ft)	3.0	
Elevation of Ports from Ground Level (ft)	30.0	

Equivalent Diameter = D_e (in.)

$$De = \frac{2 \times (\text{Depth} \times \text{Width})}{(\text{Depth} + \text{Width})} = \text{-----}$$

"Velocity" or "Particulate" Traverse	velocity
Distance Upstream from Flow Disturbance (in.)	245.0
Diameters Upstream from Flow Disturbance (³ 0.5 De)	5.15
Minimum Traverse Points Needed for a Velocity Traverse *	12
Minimum Traverse Points Needed for a Particulate Traverse *	12
Distance Downstream from Flow Disturbance (in.)	376.0
Diameters Downstream from Flow Disturbance (³ 2 De)	7.90
Minimum Traverse Points Needed for a Velocity Traverse *	12
Minimum Traverse Points Needed for a Particulate Traverse *	12
Minimum Traverse Points	12
Traverse Point Overide	
Duct Area - in^2 (Effective Area)	1776.28
Duct Area - ft^2 (Effective Area)	12.3353
Diameter Check via Circumference (in.)	0.0000

Location of Points in Circular Stacks or Ducts

	4	6	8	10	12	14	16	18	20	22	24
1	6.7	4.4	3.2	2.6	2.1	1.8	1.6	1.4	1.3	1.1	1.1
2	25.0	14.6	10.5	8.2	6.7	5.7	4.9	4.4	3.9	3.5	3.2
3	75.0	29.6	19.4	14.6	11.8	9.9	8.5	7.5	6.7	6.0	5.5
4	93.3	70.4	32.3	22.6	17.7	14.6	12.5	10.9	9.7	8.7	7.9
5		85.4	67.7	34.2	25.0	20.1	16.9	14.6	12.9	11.6	10.5
6		95.6	80.6	65.8	35.6	26.9	22.0	18.8	16.5	14.6	13.2
7			89.5	77.4	64.4	36.6	28.3	23.6	20.4	18.0	16.1
8			96.8	85.4	75.0	63.4	37.5	29.6	25.0	21.8	19.4
9				91.8	82.3	73.1	62.5	38.2	30.6	26.2	23.0
10				97.4	88.2	79.9	71.7	61.8	38.8	31.5	27.2
11					93.3	85.4	78.0	70.4	61.2	39.3	32.3
12					97.9	90.1	83.1	76.4	69.4	60.7	39.8
13						94.3	87.5	81.2	75.0	68.5	60.2
14						98.2	91.5	85.4	78.6	73.8	67.7
15							95.1	89.1	83.5	78.2	72.8
16							98.4	92.5	87.1	82.0	77.0
17								95.6	90.3	85.4	80.6
18								98.6	93.3	88.4	83.9
19									96.1	91.3	86.8
20									98.7	94.0	89.5
21										96.5	92.1
22										98.9	94.5
23											96.8
24											98.9

Note:

1) Stacks having a diameter greater than 24in. shall have no traverse points located within 1.0in of the Stack walls.

2) Stacks having a diameter less than or equal to 24in, shall have no traverse points located within .50in of the Stack walls.

3) Add nipple protrusion length to Point 1 only. Actual nipple length = (length - protrusion)

Relocate to a distance equal to the inside diameter of the nozzle being used or to the above minimum distances, whichever is larger.

Number of Ports: 2.0
Direction of Flow: Right to Left
Isokinetic Sample: Yes / No
Stack Build-up: Yes / No approx. 1/2-inch bottom sediment

Port	Point	% of Duct Depth	Dist. From Inside Wall (Decimal)	Dist. From Outside Wall (Decimal)
1	1	4.4	2.1	6.4
1	2	14.6	6.9	11.2
1	3	29.6	14.1	18.4
1	4	70.4	33.5	37.8
1	5	85.4	40.7	45.0
1	6	95.6	45.5	49.8
2	1	4.4	2.1	6.4
2	2	14.6	6.9	11.2
2	3	29.6	13.9	18.2
2	4	70.4	33.2	37.5
2	5	85.4	40.2	44.5
2	6	95.6	45.0	49.3

TEST DATA

Number of Test Runs	3			
Traverse Points	24			
	Run 1	**Run 2**	**Run 3**	**Average**
Stack Cross-Sectional Diameter 1 (**circular**) (in)	35.95	35.95	35.95	35.95
Stack Cross-Sectional Diameter 2 (**circular**) (in)	35.95	35.95	35.95	35.95
Pitot Tube Coefficient (Cp)	0.84	0.84	0.84	0.84
Barometric Pressure at Ground Level (Pbar) (in Hg)	29.45	29.45	29.45	29.45
Elevation Difference Between Ground Level and Meter Box Locations (ft)	2	2	2	2.00
Elevation Difference Between Ground Level and Sampling Locations (ft)	50	50	50	50.00
Initial Dry Gas Meter Reading (ft3)	569.881	613.999	657.306	
Final Dry Gas Meter Reading (ft3)	613.856	657.290	698.762	
Dry Gas Meter Calibration Factor (Gamma)	0.9836	0.9836	0.9836	0.9836
Dry Gas Meter Calibration Coefficient (Delta H@)	2.244	2.244	2.244	2.244
Total Sampling Run Time (Theta) (min)	60	60	60	60
Volume of Water Vapor Condensed in the Impingers (g)	100.5	95.1	97.4	97.7
Weight of Water Vapor Collected in Silica Gel (g)	11.3	14.0	7.0	10.8
Air Percent by Volume Carbon Dioxide in Stack Gas (%-dry)	0.13	0.23	0.07	0.14
Air Percent by Volume Oxygen in Stack Gas (%-dry)	18.53	18.50	18.57	18.53
Air Percent by Volume Nitrogen in Stack Gas (%-dry)	81.33	81.27	81.37	81.32
Average Pitot Rotation Angle — Port Number 1	3.5			
Average Pitot Rotation Angle — Port Number 2	2.8			
Test Run Start Time (hrmin)	1/18/2013 8:15	1/18/2013 10:15	1/18/2013 11:50	
Test Run Stop Time (hrmin)	1/18/2013 9:31	1/18/2013 11:20	1/18/2013 12:53	

DETAILED RESULTS

Stack Gas Conditions	**Run 1**	**Run 2**	**Run 3**	**Average**
Stack Cross-Sectional Area (A) (ft2)	7.049	7.049	7.049	7.049
Barometric Pressure at Sampling Location (in Hg)	29.40	29.40	29.40	29.40
Dry Molecular Weight of Stack Gas (Md) (lb/lb-mole)	28.76	28.78	28.75	28.76
Wet Molecular Weight of Stack Gas (Ms) (lb/lb-mole)	27.67	27.67	27.63	27.66
Average Absolute Stack Gas Pressure (Ps) (in Hg)	29.39	29.39	29.39	29.39
Average Stack Gas Static Pressure (ps) (in H2O)	-0.18	-0.16	-0.18	-0.17
Average Stack Gas Temperature (ts) (°F)	115.0	115.2	116.0	115.4
Average Stack Gas Temperature (Ts) (°R)	575.0	575.2	576.0	575.4
Average Stack Gas Velocity (Vs) (ft/sec)	30.19	30.38	29.12	29.90
Average Stack Gas Velocity (Vs) (ft/min)	1,811	1,823	1,747	1,794
Wet Volumetric Stack Gas Flow at Actual Conditions (Qaw) (acfm)	12,768	12,847	12,316	12,644
Wet Volumetric Stack Gas Flow at Standard Conditions (scfm)	11,515	11,583	11,089	11,396
Dry Volumetric Stack Gas Flow at Standard Conditions (Qstd) (dscfm)	10,343	10,397	9,927	10,222
Percent by Volume Moisture as measured in Stack Gas (%H2O)	10.18	10.24	10.47	10.30
Percent by Volume Moisture in Stack Gas (Saturated) (%H2O)	10.18	10.24	10.47	10.30
Percent by Volume Moisture in Stack Gas (Measured) (%H2O)	10.37	10.54	10.63	10.51
Test Results				
Volume of Dry Gas Sampled at Standard Conditions (Vmstd) (dscf)	45.549	43.684	41.391	43.541
Rate of Dry Gas Sampled at Standard Conditions (dscfm)	0.759	0.728	0.690	0.726
Predicted 1-Hour Sample Volume Based on Current Sampling Rate (dscf)	45.549	43.684	41.391	43.541
Dry Mole Fraction of Flue Gas (Mfd) (1-bw/100)	0.898	0.898	0.895	0.897
Average Velocity Pressure (Delta P) (in H2O)	0.2504	0.2538	0.2329	0.2457
Average Square Root of Delta P	0.4999	0.5030	0.4814	0.4948
Average Pressure Differential of Orifice Meter (Delta H) (in H2O)	2.2083	2.1333	1.9250	2.0889
Average DGM Temperature (tm) (°F)	36.208	49.250	54.417	46.625
Average Dry Gas Meter Temperature (Tm) (°R)	496.208	509.250	514.417	506.625
Volume of Metered Gas Sample (Vm) (dry) (acf)	43.975	43.291	41.456	42.907
Post-Test Calibration (Yqa)	0.9937	1.0049	1.0025	1.0004
Post-Test/Pre-Test Calibration Factor Difference (%)	-1.02	-2.16	-1.92	-1.70

SAMPLING QA

Current Predicted Allowable Post-Test Leak Rate (dscfm)	0.020	0.020	0.020
Current Sampling Rate Status	**Too High**	**OK**	**OK**
Probe Nozzle Diameter (in)	0.305	0.305	0.305
Percent Isokinetic of Sampling Rate (% I)	102.0	97.3	96.5
In Field Isokinetic QA	**GOOD**	**GOOD**	**GOOD**
Count of Velocity Pressure Readings Below 0.05 in H2O	0	0	0
Sensitivity Factor for Differential Pressure Gauge (T)	1.010	1.010	1.011
Is Meter Box Manometer Adequate (Yes / No) ?	YES	YES	YES

MEASURED DATA FROM TEST RUNS

Point Count	Run #	Run Time (min)	Pitot Delta P (in H2O)	Square Root of Delta P	Orifice Delta H (in H2O)	DGM Temp OUT (°F)	Average DGM Temp (°F)	Stack Pressure (in H2O)	Stack Temp (°F)
1	1	0	0.26	0.510	2.3	28	28.00	-0.18	114
2	1	2.5	0.26	0.510	2.3	28	28.00		115
3	1	5	0.27	0.520	2.4	30	30.00		115
4	1	7.5	0.23	0.480	2.0	31	31.00		114
5	1	10	0.25	0.500	2.2	32	32.00		115
6	1	12.5	0.26	0.510	2.3	33	33.00		115
7	1	15	0.23	0.480	2.0	34	34.00		115
8	1	17.5	0.24	0.490	2.1	35	35.00		116
9	1	20	0.24	0.490	2.1	35	35.00		115
10	1	22.5	0.21	0.458	1.8	36	36.00		116
11	1	25	0.21	0.458	1.8	36	36.00		116
12	1	27.5	0.20	0.447	1.8	36	36.00		115
13	1	30	0.25	0.500	2.2	37	37.00		115
14	1	32.5	0.26	0.510	2.3	36	36.00		114
15	1	35	0.26	0.510	2.3	37	37.00		115
16	1	37.5	0.27	0.520	2.4	38	38.00		115
17	1	40	0.29	0.539	2.6	39	39.00		115
18	1	42.5	0.28	0.529	2.5	39	39.00		115
19	1	45	0.28	0.529	2.5	40	40.00		115
20	1	47.5	0.27	0.520	2.4	41	41.00		115
21	1	50	0.26	0.510	2.3	41	41.00		115
22	1	52.5	0.25	0.500	2.2	42	42.00		115
23	1	55	0.25	0.500	2.2	42	42.00		115
24	1	57.5	0.23	0.480	2.0	43	43.00		115
25	2	0	0.23	0.480	1.9	43	43.00	-0.16	114
26	2	2.5	0.22	0.469	1.8	43	43.00		115
27	2	5	0.25	0.500	2.1	44	44.00		115
28	2	7.5	0.25	0.500	2.1	45	45.00		115
29	2	10	0.28	0.529	2.3	46	46.00		115
30	2	12.5	0.23	0.480	1.9	47	47.00		115
31	2	15	0.27	0.520	2.2	47	47.00		115
32	2	17.5	0.25	0.500	2.1	48	48.00		115
33	2	20	0.21	0.458	1.7	49	49.00		115
34	2	22.5	0.23	0.480	1.9	49	49.00		115
35	2	25	0.22	0.469	1.8	49	49.00		116
36	2	27.5	0.20	0.447	1.6	50	50.00		115
37	2	30	0.28	0.529	2.3	50	50.00		115
38	2	32.5	0.28	0.529	2.4	50	50.00		115
39	2	35	0.28	0.529	2.4	50	50.00		116
40	2	37.5	0.30	0.548	2.6	51	51.00		115
41	2	40	0.28	0.529	2.4	52	52.00		116
42	2	42.5	0.28	0.529	2.4	52	52.00		115
43	2	45	0.29	0.539	2.5	52	52.00		115
44	2	47.5	0.27	0.520	2.3	53	53.00		115
45	2	50	0.26	0.510	2.2	53	53.00		116
46	2	52.5	0.27	0.520	2.3	53	53.00		115
47	2	55	0.23	0.480	2.0	53	53.00		116
48	2	57.5	0.23	0.480	2.0	53	53.00		116

MEASURED DATA FROM TEST RUNS

Point Count	Run #	Run Time (min)	Pitot Delta P (in H2O)	Square Root of Delta P	Orifice Delta H (in H2O)	DGM Temp OUT (°F)	Average DGM Temp (°F)	Stack Pressure (in H2O)	Stack Temp (°F)
49	3	0	0.21	0.458	1.7	51	51.00	-0.18	116
50	3	2.5	0.21	0.458	1.7	51	51.00		116
51	3	5	0.28	0.529	2.3	52	52.00		116
52	3	7.5	0.27	0.520	2.2	52	52.00		116
53	3	10	0.26	0.510	2.2	53	53.00		117
54	3	12.5	0.27	0.520	2.2	53	53.00		116
55	3	15	0.28	0.529	2.3	54	54.00		116
56	3	17.5	0.27	0.520	2.2	54	54.00		116
57	3	20	0.26	0.510	2.2	54	54.00		116
58	3	22.5	0.26	0.510	2.2	55	55.00		116
59	3	25	0.24	0.490	2.0	55	55.00		116
60	3	27.5	0.24	0.490	2.0	55	55.00		116
61	3	30	0.21	0.458	1.7	55	55.00		115
62	3	32.5	0.22	0.469	1.8	55	55.00		116
63	3	35	0.20	0.447	1.7	55	55.00		116
64	3	37.5	0.24	0.490	2.0	55	55.00		116
65	3	40	0.22	0.469	1.8	55	55.00		117
66	3	42.5	0.26	0.510	2.2	56	56.00		116
67	3	45	0.22	0.469	1.8	56	56.00		116
68	3	47.5	0.21	0.458	1.7	56	56.00		116
69	3	50	0.22	0.469	1.8	56	56.00		117
70	3	52.5	0.20	0.447	1.7	56	56.00		116
71	3	55	0.18	0.424	1.5	56	56.00		114
72	3	57.5	0.16	0.400	1.3	56	56.00		116

TEST DATA

DETAILED RESULTS

Emission Results:

	Run 1	Run 2	Run 3	Average
Methylene Chloride Mass Emission Rate (lb/hr)	0.078	0.053	0.037	0.056
Tetrachloroethylene Mass Emission Rate (lb/hr)	0.158	0.446	0.396	0.333

CONCENTRATION CALCULATIONS

Total Mass of GOC in Each Sample

Methylene Chloride Molecular Weight (g/g-mole)	84.93	84.93	84.93	84.93
Tetrachloroethylene Molecular Weight (g/g-mole)	165.83	165.83	165.83	165.83
Total Measured Methylene Chloride in Sample (ppmvw)	0.457	0.307	0.226	0.33
Total Measured Tetrachloroethylene in Sample (ppmvw)	0.452	1.270	1.180	0.97

Calculate the GOC Concentration

Corrected Methylene Chloride Concentration (ppmvw)	0.557	0.374	0.276	0.402
Corrected Tetrachloroethylene Concentration (ppmvw)	0.579	1.628	1.513	1.240
Corrected Methylene Chloride Concentration (ppmvd)	0.569	0.382	0.281	0.411
Corrected Tetrachloroethylene Concentration (ppmvd)	0.591	1.661	1.544	1.265

Calculate the Recovery for Each GOC

Fraction of Spiked Methylene Chloride Recovered (R)	0.82	0.82	0.82	0.820
Fraction of Spiked Tetrachloroethylene Recovered (R)	0.78	0.78	0.78	0.780

TEST DATA

Sample Train Leak Check Results

	Run 1	Run 2	Run 3	Average
Allowable Pressure Loss (mmHg)	93.5	93.5	93.5	93.50
Actual Pressure Loss (mmHg)	17.0	26.0	15.0	19.33
Sample Train Leak Rate as a Percentage of Allowable (%)	18.18	27.81	16.04	20.677

Laboratory Analysis Data

	Run 1	Run 2	Run 3	Average
Tank Volume Sampled (ml)	6,069	6,097	6,091	6,086
Tank Volume Sampled (liters, dry)	6.069	6.097	6.091	6.086
Concentration of Noncondensables (ppmvd as Carbon)	4	3	2	3
Concentration of Condensables (ppmvd as Carbon)	221	87	200	169
Concentration of Total Gaseous Nonmethane Organics (TGNMO) (ppmvd as Carbon)	225	90	201	172
TGNMO Mass Concentration (mg of Carbon/cu.meter)	112.5	45.1	100.6	86
Carbon Dioxide (CO2) Concentration (ppmv)	11,525	12,574	9,333	11,144
Carbon Monoxide (CO) Concentration (ppmv)	72	80	75	76
Methane (CH4) Concentration (ppmv)	13	9	9	10

Emission Results

	Run 1	Run 2	Run 3	Average
Mass Emission Rate of TGNMOs (lb/hr as Carbon)	4.353	1.750	3.732	3.278

TEST DATA

DETAILED RESULTS

Emission Results:

	Run 1	Run 2	Run 3	Average
Hydrogen Chloride (HCl) Emission Rate (lb/hr)	0.0541	0.1007	0.1079	0.0876

LAB RESULTS HCL

Sample and Calculation Data

	Run 1	Run 2	Run 3	Average
HCl Conversion Factor (KHCl)	1.028	1.028	1.028	1.028
HCl Volume of Filtered and Diluted Sample (VsHCl) (ml)	386.0	442.0	424.0	417.3
HCl Concentration of Sample, (SX^-) (mg Cl^- / L)	4.663	7.240	8.019	6.6
HCl Concentration of Blank (BX^-) (mg Cl^- / L)	0.00	0.00	0.00	0.00
HCl Total Mass in sample, (mHCl) (mg)	1.80	3.20	3.40	2.80

Stack Gas Concentration

Volume of Dry Gas Sampled at Standard Conditions (Vmstdm) (dscm)	1.290	1.237	1.172	1.233
HCl Concentration, dry basis (ConcHCl) (mg/dscm)	1.40	2.59	2.90	2.29
HCl Concentration (ppmvd) Dry @ 68F	0.921	1.707	1.914	1.514
HCl Concentration (ppmvw) Wet @ 68F	0.827	1.532	1.713	1.357

EPA Methods 1, 2, 3B, 4, 18, 25 and 26A
Nomenclature and Sample Calculations
Run No. - 1

Constants

CO_2F_{wt}= 44.0	in wg= 0.073529	NO_2F_{wt}= 46.01	$HClF_{wt}$= 36.46
O_2F_{wt}= 32.0	gr= 0.000142857	COF_{wt}= 28.01	SO_2F_{wt}= 64.06
CON_2F_{wt}= 28.0	mmBtu= 1000000 Btu	$H_2SO_4F_{wt}$= 98.08	Cl_2F_{wt}= 70.91
H_2OF_{wt}= 18.0	CF_{wt}= 12.011	T_{std}= 528	P_{std}= 29.92
	PF_{wt}= 44.0962	$MDCF_{wt}$= 84.93	

Stack Variables

Cp =	0.84	pitot tube coefficient (dimensionless)
P_{bar} =	29.45 in. Hg	barometric pressure
E_{box} =	2 ft	elevation difference between ground level and meter box
E_{sam} =	50 ft	elevation difference between ground level and sampling ports
γ =	0.9836	gamma, dry gas meter calibration factor (dimensionless)
θ =	60.0 min	net run time (minutes)
V_{lc} =	111.8 g	total mass of liquid collected in impingers (g)
$\%CO_2$ =	0.13 %	percent CO_2 by volume (dry basis) (dimensionless)
$\%O_2$ =	18.53 %	percent O_2 by volume (dry basis) (dimensionless)
$\%N_2$ =	81.33 %	percent N_2 by volume (dry basis) (dimensionless)
A =	7.0490 ft^2	stack cross-sectional area
P_g =	-0.18 in. H_2O	flue gas static pressure
T_{savg} =	575.00 R	average absolute flue gas temperature (460R+tsavg °F)
$SQ\Delta P_{avg}$ =	0.50 in. wg	average square root ΔP
ΔH =	2.21 in. wg	average pressure differential of orifice meter
T_m =	496.21 R	dry gas meter temperature (460R+tsavg °F)
V_m =	43.98 ft^3	volume of metered gas sample (dry actual cubic feet)
D_n =	0.305 in.	sampling nozzle diameter

Calculated Stack Variables

Barometric pressure at sampling location

NOTE: Barometric pressure recorded at ground level

$$P_{sam} = P_{bar} - [(E_{sam} / 100 \text{ ft}) * 0.1 \text{ in. Hg}]$$

$$P_{sam} = 29.45 - ((50.0 / 100) * 0.1)$$

$$P_{sam} = 29.40 \text{ in. Hg}$$

Volume of dry gas sampled at standard conditions (dscf)

$$V_{mstd} = \gamma * Vm * [P_{bar} - ([(E_{box} / 100 \text{ ft}) * 0.1 \text{ in. Hg}] + (\Delta H / 13.6)) / P_{std}] * (T_{std} / T_m)$$

$$V_{mstd} = 0.9836 * 43.975 * ((29.45 - ((2.0 / 100) * 0.1) + (2.2083 / 13.6)) / 29.92) * (528.0 / 496.208)$$

$$V_{mstd} = 45.549 \text{ ft}^3$$

Volume of water vapor at standard conditions (68 °F, scf)

$$V_{wstd} = (0.04715 \text{ ft}^3/\text{g}) * Vlc$$

$$V_{wstd} = (0.04715 * 111.8)$$

$$V_{wstd} = 5.3 \text{ ft}^3$$

Percent moisture by volume as measured in flue gas

$\%H_2O$ (Measured) = 100 * [V_{wstd} / (V_{wstd} + V_{mstd})]

$\%H_2O$ (Measured) = 100 * (5.271 / (5.271 + 45.549))

$\%H_2O$ (Measured) = 10.37

$\%H_2O$ (Saturated) = (100 / P_{sam}) * 10 ^ (6.6911 - (3144 / (T_{savg} + 390.86 - 460)))

$\%H_2O$ (Saturated) = (100 / 29.386765) * 10 ^ (6.6911 - (3144 / (575.000000 + 390.86 - 460)))

$\%H_2O$ (Saturated) = 10.18

$\%H_2O$ = 10.18

Absolute flue gas pressure

P_s = P_{sam} + (Pg / 13.6)

P_s = 29.40 + (-0.18 / 13.6)

P_s = 29.39 in. Hg

Dry mole fraction of flue gas (dimensionless)

M_{fd} = 1 - ($\%H_2O$ / 100)

M_{fd} = 1 - (10.18 / 100)

M_{fd} = 0.898

Dry molecular weight of flue gas (lb/lb-mole)

M_d = [($\%CO_2$ / 100) * 44.0] + [($\%O_2$ / 100) * 32.0] + [((100 - $\%CO_2$ - $\%O_2$) / 100) * 28.0]

M_d = ((0.13 / 100) * 44.0) + ((18.53 / 100) * 32.0) + (((100 - 0.13 - 18.53) / 100) * 28.0)

M_d = 28.76 lb/lb-mole

M_d = 28.76

Wet molecular weight of flue gas (lb/lb-mole)

M_s = M_d * M_{fd} + (H_2OF_{wt} * ($\%H_2O$ / 100))

M_s = 28.763 * 0.898 + 18.00 * (10.18 / 100)

M_s = 27.67 lb/lb-mole

Average flue gas velocity (ft/sec)

v_s = 85.49 * Cp * ($SQ\Delta P_{avg}$) * (T_{avg} / (P_s * M_s))$^{0.5}$

v_s = 85.49 * 0.84 * (0.4999) * (575.00 / (29.387 * 27.667)) ^ 0.5

v_s = 30.19 ft/sec

Wet volumetric flue gas flow rate at actual conditions (acfm)

Q_{aw} = v_s * A * 60 sec/min

Q_{aw} = 30.189 * 7.049 * 60

Q_{aw} = 12,768 ft^3/min

Wet volumetric flue gas flow rate at standard conditions (scfm)

$Q_{sdw} = v_s * A * (T_{std} / T_{savg}) * (P_s / P_{std}) * 60$ sec/min

$Q_{sdw} = 30.189 * 7.049 * (528.0 / 575.000) * (29.387 / 29.92) * 60$

$Q_{sdw} =$ 11,515 ft^3/min

Dry volumetric flue gas flow rate at standard conditions (dscfm)

$Q_{sd} = M_{fd} * v_s * A * (T_{std} / T_{savg}) * (P_s / P_{std}) * 60$ sec/min

$Q_{sd} = 0.898 * 30.1890 * 7.0490 * (528.0 / 575.000) * (29.387 / 29.92) * 60$

$Q_{sd} =$ 10,343 ft^3/min

Isokinetic Calculations

Percent isokinetic of sampling rate (%)

$\%I = (P_{std} / T_{std}) * (T_{savg} / P_s) * [V_{mstd} / (v_s * M_{fd} * \theta * \pi * (D_n / 2)^2)]$

%I = ((((29.92 / 528.0) * (575.000 / 29.387)) * (45.549 / (30.1890 * 0.898 * 60.0 * (()3.141593 * (0.305 / 2) ^ 2) / 144))) / 60) * 100

%I = 102.0 %

Method 18 Calculations

Methylene Chloride Concentration

MDCppmvw = 0.5573171

MDCppmvd = (MDCppmvw / 0.98)

MDCppmvd = 0.57 ppmvd

Methylene Chloride mass emission rate (lb/hr)

$MERMDC = (60 \text{ min/hr} * MDCppmvd * MDCF_{wt} * lb * Q_{sd}) / (385.3 \text{ ft}^3 * 10^6)$

MERMDC = 0.08 lb/hr

Method 25 Calculations

TGNMO concentration (ppmvd as carbon)

TGNMOppmvd = 225.00 ppmvd as carbon

TGNMO mass emission rate (lb/hr as carbon)

$MERTGNMO = (60 \text{ min/hr} * TGNMO \text{ ppmvd} * CF_{wt} * lb * Q_{sd}) / (385.3 \text{ ft}^3 * 10^6)$

MERTGNMO = 4.35 lb/hr (as carbon)

Method 26A Calculations

HCl concentration (ppmvd)

HClppmvd = 0.92 ppmvd

HCl mass emission rate (lb/hr)

$MERHCl = (60 \text{ min/hr} * HCl \text{ ppmvd} * HClF_{wt} * lb * Q_{sd}) / (385.3 \text{ ft}^3 * 10^6)$

MERHCl = 0.0541 lb/hr

Method Field Data

Effr Date: 7/16/12
Rev No. 0
Issued ality Manager

Plant: Clean Harbors Recycling Services of Ohio L — Run Time Start: 903 — Tank #: 130112 B - 1 - M25/TK (173)

Location: Blue Room, Cooker Room, Still Room, J003 — Run Time Stop: 1003 — Trap #: 130112 B - 1 - M25/TP (1071)

Purge Time Start / Stop: 847 / 900 — Run # 1 — Train ID: T - M25 - 008 — Pressure Gauge ID: T - DPG - 009

Barometric Pressure (at time of tank reading)		
Initial:	748	mmHg
Final:	750	mmHg

Absolute Tank Pressure		
Initial:	001	mmHg
Final:	002	mmHg

Tank Vacuum (Barometric - Tank Pressure)*		
Initial:	747	mmHg
Final:	748	mmHg

Date / Time of Pressure Readings	
Initial:	1-18-13 / 07:00
Final:	1-18-13 / 10:00

Tank Temperature		
Initial:	35	°F
Final:	36	°F

Initial Trap CO_2 Concentration:	410	ppm
Trap on Dry Ice >30min Prior to Run	(Yes) / No	
Train Pre-Heated >30min Prior to Purge	(Yes) / No	

Time (min)	Vacuum (inHg)	Flowmeter Setting ** (cc/min)	Probe Temperature (≥265° F)	Filter Temperature (250° ± 5° F)	Comments
0	26.00	70	276	250	
5	25.00	70	275	249	
10	24.00	70	275	250	
15	22.50	70	275	250	
20	21.00	70	275	250	
25	19.50	70	275	250	
30	18.00	70	276	250	
35	16.25	70	275	251	
40	14.50	70	275	250	
45	13.00	70	275	250	
50	11.50	70	274	250	
55	9.75	70	275	250	
60	8.00	70	275	250	

Pre-Test Leak Check

ΔP = Allowable Pressure Loss (mmHg)
V_t = Sample Train Volume (56 cc)
F = Sample Flow Rate (cc / min)
Θ = Leak Check Duration (10 min)
P_b = Barometric Pressure (mmHg)

$\Delta P = (F * P_b * \Theta) / (V_t * 100)$

$\Delta P = (70) * (748) * (10 \text{ min}) / (56) * 100$

P_b = 748 mmHg

System Pressure Start 0 mmHg
System Pressure End 17 mmHg
Actual Pressure Loss* 17 mmHg
*(system pressure end - start)

ΔP = 93.5 mmHg

Target pressure*: 93.5 mmHg
*(ΔP + system pressure start)

Leak% = (Actual Pressure Loss / ΔP) * 100
Leak% = 18.2

*Note: Initial Tank Vacuum and Train Vacuum during leak check must be within 10mmHg absolute. Vt = 91cc when two traps are utilized.
** Allowable sample rate range: 70 and 100 cc/min. Sampling rate should be constant (±10%)
ΔP = Pb x 0.125, for single trap, 70 cc sample flow rate, 10-min leak check or Pb x 0.077, for two traps, 70 cc sample flow rate, 10-min leak check.

Job Number: 130112 B
Done By / Date: JL / 1-18-13
Final Check By / Date: [illegible] / 2/4/13

Air Compliance Testing, Inc.
D:\TESTING\ACT Test Methods\M025\Method 25
(Method 25-Field Data Sheet) 1/9/2013
1 of 1

Method Field Data

Plant: Clean Harbors Recycling Services of Ohio L
Run Time Start: 1018
Tank # 130112 B - 2 - M25/TK (129)

Location: Blue Room, Cooker Room, Still Room, J003
Run Time Stop: 1118
Trap # 130112 B - 2 - M25/TP (1042)

Purge Time Start / Stop: 1000 / 1012
Run # 2 Train ID: T - M25 - 002
Pressure Gauge ID: T - DPG -

Barometric Pressure (at time of tank reading)		
Initial:	748	mmHg
Final:	748	mmHg

Absolute Tank Pressure		
Initial:	601	mmHg
Final:	663	mmHg

Tank Vacuum (Barometric - Tank Pressure)*		
Initial:	147	mmHg
Final:	85	mmHg

Date / Time of Pressure Readings		
Initial:	1-18-13	07:00
Final:	1-18-13	12:00

Tank Temperature		
Initial:	35	°F
Final:	36	°F

Initial Trap CO_2 Concentration:	0	ppm
Trap on Dry Ice >30min Prior to Run	(Yes) / No	
Train Pre-Heated >30min Prior to Purge	(Yes) / No	

Time (min)	Vacuum (inHg)	Flowmeter Setting ** (cc/min)	Probe Temperature (≥265° F)	Filter Temperature (250° ± 5° F)	Comments
0	26.50	70	275	249	
5	25.50	70	276	250	
10	24.75	70	274	248	
15	22.25	70	276	251	
20	19.75	70	274	250	
25	17.75	70	275	249	
30	15.50	70	273	250	
35	13.50	70	274	250	
40	11.75	70	275	250	
45	10.00	70	276	248	
50	8.75	70	276	250	
55	7.00	70	274	252	
60	5.50	70	275	250	

Pre-Test Leak Check

ΔP = Allowable Pressure Loss (mmHg)
V_t = Sample Train Volume (56 cc)
F = Sample Flow Rate (cc / min)
Θ = Leak Check Duration (10 min)
P_b = Barometric Pressure (mmHg)

ΔP = (F * P_b * Θ) / (V_t * 100)
ΔP = (70)*(748)*(10 min) / (56)* 100

P_b = 748 mmHg

System Pressure Start 0 mmHg
System Pressure End 26 mmHg
Actual Pressure Loss* 26 mmHg
*(system pressure end - start)

ΔP = 93.5 mmHg

Target pressure*: 93.5 mmHg
*(ΔP + system pressure start)

Leak% = (Actual Pressure Loss / ΔP) * 100
Leak% = 27.8

*Note: Initial Tank Vacuum and Train Vacuum during leak check must be within 10mmHg absolute. Vt = 91cc when two traps are utilized.
** Allowable sample rate range: 70 and 100 cc/min. Sampling rate should be constant (±10%)
ΔP = Pb x 0.125, for single trap, 70 cc sample flow rate, 10-min leak check or Pb x 0.077, for two traps, 70 cc sample flow rate, 10-min leak check.

Job Number: 130112 B
Done By / Date: JL / 1-18-13
Final Check By / Date: MC / 2/4/13

Method Field Data

Effr Date: 7/16/12
Rev No. 0
Issued ... ality Manager

Plant: Clean Harbors Recycling Services of Ohio L — Run Time Start: 12:10 — Tank # 130112 B - 3 - M25/TK (182)

Location: Blue Room, Cooker Room, Still Room, J003 — Run Time Stop: 13:10 — Trap # 130112 B - 3 - M25/TP (1095)

Purge Time Start / Stop: 11:30 / 11:43 — Run # 3 — Train ID: T - M25 - 008 — Pressure Gauge ID: T - DPG - 009

Barometric Pressure (at time of tank reading)		
Initial:	748	mmHg
Final:	748	mmHg

Absolute Tank Pressure		
Initial:	000	mmHg
Final:	667	mmHg

Tank Vacuum (Barometric - Tank Pressure)*		
Initial:	748	mmHg
Final:	81	mmHg

Date / Time of Pressure Readings		
Initial:	1-18-13	07:00
Final:	1-18-13	14:00

Tank Temperature		
Initial:	35	°F
Final:	36	°F

Initial Trap CO_2 Concentration:	<10	ppm
Trap on Dry Ice >30min Prior to Run	Yes / No	
Train Pre-Heated >30min Prior to Purge	Yes / No	

Time (min)	Vacuum (inHg)	Flowmeter Setting ** (cc/min)	Probe Temperature (≥265° F)	Filter Temperature (250° ± 5° F)	Comments
0	25.50	70	276	249	
5	24.00	70	275	250	
10	22.75	70	275	250	
15	21.00	70	276	250	
20	19.25	70	275	250	
25	17.50	70	276	250	
30	15.50	70	274	250	
35	13.75	70	275	250	
40	12.00	70	275	250	
45	10.25	70	275	251	
50	8.50	70	276	250	
55	7.00	70	275	250	
60	5.50	70	275	250	

Pre-Test Leak Check

ΔP = Allowable Pressure Loss (mmHg)
V_t = Sample Train Volume (56 cc)
F = Sample Flow Rate (cc / min)
Θ = Leak Check Duration (10 min)
P_b = Barometric Pressure (mmHg)

ΔP = (F * P_b * Θ) / (V_t * 100)
ΔP = (70) * (748) * (10 min) / (56) * 100

P_b = 748 mmHg

System Pressure Start 0 mmHg
System Pressure End 15.85 mmHg
Actual Pressure Loss* 15.85 mmHg
*(system pressure end - start)

ΔP = 93.5 mmHg

Target pressure*: 93.5 mmHg
*(ΔP + system pressure start)

Leak% = (Actual Pressure Loss / ΔP) * 100
Leak% = 16.04

*Note: Initial Tank Vacuum and Train Vacuum during leak check must be within 10mmHg absolute. Vt = 91cc when two traps are utilized.
** Allowable sample rate range: 70 and 100 cc/min. Sampling rate should be constant (±10%)
ΔP = Pb x 0.125, for single trap, 70 cc sample flow rate, 10-min leak check or Pb x 0.077, for two traps, 70 cc sample flow rate, 10-min leak check.

Job Number: 130112 B
Done By / Date: JL / 1-18-13
Final Check By / Date: [illegible] / 2/14/13

Air Compliance Testing, Inc.
D:\TESTING\ACT Test Methods\M025\Method 25
(Method 25-Field Data Sheet) 1/9/2013
1 of 1

Method 18 Integrated Bag

Effective Date: 7/16/12
Rev No. 0
Issued by: Quality Manager

Plant Clean Harbors Location Exhaust Stack Date 1/18/13

Sample Bag Number Run 1 ~~AJS~~ Operator ~~AS~~ JL

Extraction Technique (circle one) Evacuation Box ~~002~~ CEMS Rack

Sample Size Required 20L ml

Sample Time Allowed 60 min

Pump Number 1

Sample Flow Rate .3 L/m ~~ml/min~~

✓ End Time 931

✓ Start Time 815

Actual SampleTime 60 min

Actual Sample Size Obtained 18L ml
(sample flow rate x actual sample time)

130112B
JL 2/6/13

Air Compliance Testing, Inc.
D:\Testing\ACT Test Methods\M018\Method 18
(Method 18-Integrated Bag) 2/5/2013
1 of 1

Method 18 Integrated Bag

Effective Date: 7/16/12
Rev No. 0
Issued by: Quality Manager

Plant Clean Harbors Location Exhaust Stack Date 1/18/13

Sample Bag Number Run 2 Operator JL

Extraction Technique (circle one) Evacuation Box CEMS Rack

Sample Size Required 20 L ml

Sample Time Allowed 60 min

Pump Number 1

Sample Flow Rate .3 L/m ml/min

End Time 1120

Start Time 1015

Actual SampleTime 60 min

Actual Sample Size Obtained 18 L ml
(sample flow rate x actual sample time)

130 1128

SKC 2/6/13

Air Compliance Testing, Inc.
D:\Testing\ACT Test Methods\M018\Method 18
(Method 18-Integrated Bag) 2/5/2013
1 of 1

Method 18 Integrated Bag

Effective Date: 7/16/12
Rev No. 0
Issued by: Quality Manager

Plant Clean Harbors Location Exhaust Stack Date 1/18/13

Sample Bag Number Run 3 Operator JC

Extraction Technique (circle one) Evacuation Box CEMS Rack

Sample Size Required 20 L ml

Sample Time Allowed 60 min

Pump Number 1

Sample Flow Rate .3 L/m ml/min

End Time 1253

Start Time 1150

Actual SampleTime 60 min

Actual Sample Size Obtained 18 L ml
(sample flow rate x actual sample time)

Air Compliance Testing, Inc.
D:\Testing\ACT Test Methods\M018\Method 18
(Method 18-Integrated Bag) 2/5/2013
1 of 1

130112B
8/2 1/6/13

Method 26A Isokinetic Field Data

Effective Date: 7/16/12
Rev No. 0
Issued: Quality Manager

Plant	Clean Harbors Recycling Services of Ohio LLC	Meter box no.	T-MTB- 015	Gamma	.9836
Location	Blue Room, Cooker Room, Still Room, J003, and I	Pump no.	T-PMP- 015	K Factor	8.8 / /
Run no.	1	~~Nomograph no.~~	~~T-NOM-~~	Nozzle Size, in.	.305
Test start time	08:15	Probe no.	T-PRB- 013	Barometric pressure, in.Hg	29.45 Barometer no. T - BAR - AP6-209
Test stop time	9:31	Filter box no.	T-FLB- 035	Ambient temperature, °F	22
Pre-test leak rate @ 15in.Hg	.003	Impinger box no.	T-IMB- 003	Filter box temperature setting, °F	>248°F
Post-test leak rate @ 6 oin.Hg	0.000	Umbilical cord no.	T-UMC- 006	Probe temperature setting, °F	>248°F
Pre-test pitot leak check - total ✓	static ✓	Umbilical adapter no.	T-UMA- 030	Orsat flow rate setting, SCFH	0.3
Post-test pitot leak check - total ✓	static ✓	Orsat bag no.	130112 B-1-M3/T13	Meter box operator	PR Date 1.18.13

POINT	CLOCK TIME min	DRY GAS METER CF	PITOT In. H_2O ΔP	ORIFICE ΔH In. H_2O DESIRED	ORIFICE ΔH In. H_2O ACTUAL	PROBE TEMP °F	STACK TEMP °F	DRY GAS TEMP, °F INLET	DRY GAS TEMP, °F OUTLET	FILTER TEMP °F	IMPINGER TEMP °F	FILTER EXIT TEMP °F	PUMP VACUUM in.Hg	ORSAT FLOW SCFH	STATIC PRESSURE ± in.H_2O
1	0	569.881	.26	2.28	2.3	253	114	/	28	255	29	/	3.5	0.3	-.18
2	2.5	571.63	.26	2.28	2.3	254	115	/	28	255	29	/	3.5	0.3	/
3	5	573.54	.27	2.38	2.4	254	115	/	30	255	32	/	3.5	0.3	/
4	7.5	575.41	.23	2.02	2.0	255	114	/	31	254	34	/	3.5	0.3	/
5	10	577.22	.25	2.2	2.2	255	115	/	32	257	36	/	3.5	0.3	/
6	12.5	579.05	.26	2.28	2.3	254	115	/	33	254	44	/	3.5	0.3	/
7	15	580.931	0.23	2.02	2.0	254	115	/	34	256	47	/	3.5	0.3	/
8	17.5	582.685	0.24	2.112	2.1	253	116	/	35	254	47	/	3.5	0.3	/
9	20	584.47	0.24	2.112	2.1	253	115	/	35	255	49	/	3.5	0.3	/
10	22.5	586.27	0.21	1.848	1.8	254	116	/	36	257	49	/	3.0	0.3	/
11	25	588.28	0.21	1.848	1.8	253	116	/	36	254	50	/	3.0	0.3	/
12	27.5	589.66	0.20	1.76	1.8	253	115	/	36	254	50	/	3.0	0.3	/
1	30	591.229	0.28	2.2	2.2	254	115	/	37	258	38	/	4.0	0.3	/
2	32.5	592.945	0.26	2.28	2.3	253	114	/	36	253	40	/	4.0	0.3	/
3	35	594.85	0.26	2.28	2.3	253	115	/	37	254	42	/	4.0	0.3	/
4	37.5	596.76	0.27	2.376	2.4	253	115	/	38	258	45	/	4.0	0.3	/
5	40	598.635	0.29	2.552	2.6	254	115	/	39	253	48	/	5.0	0.3	/
6	42.5	600.60	0.28	2.464	2.5	254	115	/	39	253	48	/	4.5	0.3	/
7	45	602.575	0.28	2.464	2.5	252	115	/	40	250	50	/	5.0	0.3	/
8	47.5	604.57	0.27	2.376	2.4	254	115	/	41	257	51	/	4.5	0.3	/
9	50	606.48	0.26	2.28	2.3	254	115	/	41	248	51	/	4.5	0.3	/
10	52.5	608.40	0.25	2.2	2.2	254	115	/	42	254	53	/	4.0	0.3	/
11	55	610.25	0.25	2.2	2.2	254	115	/	42	275	54	/	4.0	0.3	/
12	57.5	612.31	0.23	2.02	2.0	260	115	/	43	265	56	/	4.0	0.3	/
Final	60	613.856													

Nomograph Calibration Variables ΔH@ 2.244 Cp 0.84 Ts Tm Ps Pm Bws

Comments: Pause 8:35
Resume 9:01
timer 30:00
meter 541.229

Test Observers -

Air Compliance Testing, Inc.
O:\Testing\ACT Test Methods\M026A\Method 26A
(Method 26A-Isokinetic Field Data) 1/9/2013
1 of 1

Job Number: 130112 B
Done By / Date: PR / 1.18.2013
Final Check By / Date: SHC / 2/4/13

Method 26A Isokinetic Field Data

Effective Date: 7/16/12
Rev No. 0
Issuer: Quality Manager

Plant	Clean Harbors Recycling Services of Ohio LLC	Meter box no.	T-MTB- 015	Gamma	0.9836
Location	Blue Room, Cooker Room, Still Room, J003, and	Pump no.	T-PMP- 015	K Factor	8.23 / 8.5 /
Run no.	2	~~Nomograph no.~~	~~T-NOM-~~	Nozzle Size, in.	.305
Test start time	10:15	Probe no.	T-PRB- 613	Barometric pressure, in.Hg	29.45 Barometer no. T - ~~BAR~~ - DR6-009
Test stop time	11:20	Filter box no.	T-FLB- 005	Ambient temperature, °F	29
Pre-test leak rate @ 15in.Hg	.002	Impinger box no.	T-IMB- 026	Filter box temperature setting, °F	>248°F
Post-test leak rate @ 60in.Hg	0.001	Umbilical cord no.	T-UMC- 607	Probe temperature setting, °F	>248°F
Pre-test pitot leak check - total	✓ static ✓	Umbilical adapter no.	T-UMA- 2593	Orsat flow rate setting, SCFH	0.3
Post-test pitot leak check - total	static	Orsat bag no.	130112B-2 - M3B / FB	Meter box operator	PB Date 1.18.2013

POINT	CLOCK TIME min	DRY GAS METER CF	PITOT In. H_2O ΔP	ORIFICE ΔH In. H_2O DESIRED	ORIFICE ΔH In. H_2O ACTUAL	PROBE TEMP °F	STACK TEMP °F	DRY GAS TEMP, °F INLET	DRY GAS TEMP, °F OUTLET	FILTER TEMP °F	IMPINGER TEMP °F	FILTER EXIT TEMP °F	PUMP VACUUM in.Hg	ORSAT FLOW SCFH	STATIC PRESSURE ± in.H_2O
1	0	613.999	0.23	1.893	1.9	263	114	–	43	282	33	–	4.0	0.3	-0.16
2	2.5	615.60	0.22	1.8106	1.8	264	115	–	43	272	33	–	4.0	0.3	/
3	5.0	617.28	0.25	2.057	2.1	261	115	–	44	263	33	–	4.5	0.3	/
4	7.5	619.01	0.25	2.057	2.1	265	115	–	45	259	34	–	4.5	0.3	/
5	10.0	620.77	0.28	2.3044	2.3	263	115	–	46	270	36	–	5.5	0.3	/
6	12.5	622.525	0.23	1.893	1.9	268	115	–	47	259	37	–	4.5	0.3	–
7	15.0	624.37	0.27	2.2221	2.2	263	115	–	47	272	42	–	5.0	0.3	–
8	17.5	626.175	0.25	2.057	2.1	257	115	–	48	251	45	–	5.0	0.3	–
9	20.0	627.95	0.21	1.7283	1.7	258	115	–	49	259	47	–	4.0	0.3	–
10	22.5	629.60	0.23	1.893	1.9	263	115	–	49	259	49	–	4.0	0.3	–
11	25.0	631.26	0.22	1.8106	1.8	262	116	–	49	270	51	–	4.0	0.3	–
12	27.5	632.95	0.20	1.646	1.6	260	115	–	50	260	55	–	4.0	0.3	–
1	30.0	634.525	0.28	2.3044	2.3	263	115	–	50	262	53	–	5.0	0.3	–
2	32.5	636.42	0.28	2.38	2.4	260	115	–	50	265	56	–	5.5	0.3	–
3	35.0	638.29	0.28	2.38	2.4	261	116	–	50	266	58	–	5.5	0.3	–
4	37.5	640.25	0.30	2.55	2.6	261	115	–	51	267	61	–	6.0	0.3	–
5	40.0	642.26	0.28	2.38	2.4	261	116	–	52	267	65	–	5.5	0.3	–
6	42.5	644.31	0.28	2.38	2.4	261	115	–	52	264	63	–	5.5	0.3	–
7	45.0	646.16	0.29	2.465	2.5	262	115	–	52	271	61	–	5.5	0.3	–
8	47.5	648.145	0.27	2.295	2.3	259	115	–	53	263	60	–	5.0	0.3	–
9	50.0	650.045	0.26	2.21	2.2	261	116	–	53	267	58	–	5.0	0.3	–
10	52.5	651.96	0.27	2.295	2.3	260	115	–	53	266	56	–	5.0	0.3	–
11	55.0	653.84	0.23	1.955	2.0	261	116	–	53	266	56	–	4.5	0.3	–
12	57.5	655.60	0.23	1.955	2.0	262	116	–	53	264	56	–	4.5	0.3	–
Final	60	657.290													

Nomograph Calibration Variables ΔH@ 2.244 Cp 0.84 Ts Tm Ps Pm Bws

Comments: Pause 10:45
Resume 10:50
time 30.0
meter 634.525

Test Observers -

Air Compliance Testing, Inc.
D:\Testing\ACT Test Methods\M026A\Method 26A
(Method 26A-Isokinetic Field Data) 1/9/2013
1 of 1

Job Number: 130112 B
Done By / Date: PB / 1.18.2013
Final Check By / Date: [illegible] / 1/24/13

Method 26A Isokinetic Field Data

Effective Date: 7/18/12
Rev No. 0
Issued ity Manager

Plant	Clean Harbors Recycling Services of Ohio LI	Meter box no.	T-MTB- 015	Gamma	0.9836
Location	Blue Room, Cooker Room, Still Room, J003, and I	Pump no.	T-PMP- 015	K Factor	8.3 / /
Run no.	3	~~Nomograph no.~~	~~T-NOM-~~	Nozzle Size, in.	.305
Test start time	11:50	Probe no.	T-PRB- 613	Barometric pressure, in.Hg	29.45 Barometer no. T-~~BAR~~-D76-009
Test stop time	12:53	Filter box no.	T-FLB- 005	Ambient temperature, °F	30
Pre-test leak rate @ 15in.Hg	.002	Impinger box no.	T-IMB- 003	Filter box temperature setting, °F	>248°F
Post-test leak rate @ 5.0in.Hg	0.003	Umbilical cord no.	T-UMC- 602	Probe temperature setting, °F	>248°F
Pre-test pitot leak check - total	static	Umbilical adapter no.	T-UMA- 030	Orsat flow rate setting, SCFH	0.3
Post-test pitot leak check - total	static	Orsat bag no.	130112B-3-M3B/TB	Meter box operator	TB Date 1.18.2013

POINT	CLOCK TIME min	DRY GAS METER CF	PITOT In. H_2O ΔP	ORIFICE ΔH In. H_2O DESIRED	ORIFICE ΔH In. H_2O ACTUAL	PROBE TEMP °F	STACK TEMP °F	DRY GAS TEMP, °F INLET	DRY GAS TEMP, °F OUTLET	FILTER TEMP °F	IMPINGER TEMP °F	FILTER EXIT TEMP °F	PUMP VACUUM in.Hg	ORSAT FLOW SCFH	STATIC PRESSURE ± In.H_2O
1	0	657.306	.21	1.74	1.7	260	116	/	51	267	34	/	2.5	0.3	-.18
2	2.5	658.951	.21	1.74	1.7	262	116	/	51	265	34	/	2.5	0.3	/
3	5	660.34	.28	2.32	2.3	261	116	/	52	267	35	/	2.5	0.3	/
4	7.5	662.45	0.27	2.241	2.2	260	116	/	52	267	36	/	3.5	0.3	/
5	10	664.20	0.26	2.158	2.2	261	117	/	53	265	37	/	3.5	0.3	/
6	12.5	666.235	0.27	2.241	2.2	262	116	/	53	268	38	/	4.0	0.3	/
7	15	668.12	0.28	2.324	2.3	262	116	/	54	267	38	/	4.0	0.3	/
8	17.5	669.98	0.27	2.241	2.2	260	116	/	54	267	39	/	4.0	0.3	/
9	20	671.875	0.26	2.158	2.2	261	116	/	54	264	39	/	3.5	0.3	/
10	22.5	673.74	0.26	2.158	2.2	261	116	/	55	268	39	/	3.5	0.3	/
11	25	675.50	0.24	1.992	2.0	262	116	/	55	268	40	/	3.5	0.3	/
12	27.5	677.29	0.24	1.992	2.0	261	116	/	55	267	40	/	3.5	0.3	/
1	30	679.041	0.21	1.743	1.7	261	115	/	55	267	39	/	3.0	0.3	/
2	32.5	680.64	0.22	1.826	1.8	261	116	/	55	273	39	/	3.0	0.3	/
3	35	682.275	0.20	1.66	1.7	261	116	/	55	259	39	/	3.0	0.3	/
4	37.5	683.92	0.24	1.992	2.0	260	116	/	55	265	40	/	3.5	0.3	/
5	40	685.65	0.22	1.826	1.8	262	117	/	55	275	39	/	3.0	0.3	/
6	42.5	687.295	0.26	2.158	2.2	261	116	/	56	271	39	/	4.0	0.3	/
7	45	689.145	0.22	1.826	1.8	259	116	/	56	254	40	/	3.5	0.3	/
8	47.5	690.88	0.21	1.743	1.7	262	116	/	56	279	41	/	3.0	0.3	/
9	50	692.495	0.22	1.826	1.8	260	117	/	56	260	41	/	3.5	0.3	/
10	52.5	694.17	0.20	1.66	1.7	261	116	/	56	267	41	/	3.0	0.3	/
11	55	695.88	0.18	1.494	1.5	262	117	/	56	274	42	/	3.0	0.3	/
12	57.5	697.41	0.16	1.328	1.3	262	116	/	56	273	42	/	2.5	0.3	/
Final	60	698.762													

Nomograph Calibration Variables ΔH@ 2.244 Cp 0.84 Ts Tm Ps Pm Bws

Comments: Pause 12:20
Resume 12:23

Test Observers - Timer 30:00
meter 679.041

Air Compliance Testing, Inc.
D:\Testing\ACT Test Methods\M026A\Method 26A
(Method 26A-Isokinetic Field Data) 1/9/2013
1 of 1

Job Number: 130112 B
Done By / Date: TB / 1.18.2013
Final Check By / Date: BC / 2/4/13

Method 26A Moisture Recovery Knockout

Effective Date: 7/16/12
Rev No. 0
Issued by: Quality Manager

Plant Name Clean Harbors Recycling Service Location Blue Room, Cooker Room, Still Room, J003, and P017 Exhaust Stack (B)

Prepared By AS2 Date 1/16/13 Shop Balance ID - A-BAL-005 Field Balance ID - A-BAL- 007

Run Number	1	2	3	4
Impinger Box No.	T-IMB- 003	T-IMB- 026	T-IMB- 003	T-IMB-
Recovered By	CG	CG	CG	
Date/Time of Analysis	1/16/13 950	1/16/13 1145	1/16/13 1340	
Turbidity / Color (Clear, Cloudy, Suspended Particulates, etc.)	CLEAR/NONE	CLEAR/NONE	CLEAR/NONE	
Impinger KO				
Final Weight (g)				
Tared Weight (g)				
Impinger #1				
Final Weight (g)	752.3	718.6	778.6	
Tared Weight (g)	681.6	677.3	696.6	
Condensed H_2O (g)	70.7	41.3	82.0	
Impinger #2				
Final Weight (g)	711.0	721.8	687.0	
Tared Weight (g)	688.2	681.7	672.8	
Condensed H_2O (g)	22.8	40.1	14.2	
Impinger #3				
Final Weight (g)	600.6	603.8	598.2	
Tared Weight (g)	593.6	590.1	597.0	
Condensed H_2O (g)	7.0	13.7	1.2	
Impinger #4				
Final Weight (g)				
Tared Weight (g)				
Condensed H_2O (g)				
Total Condensed (g)	100.5	95.1	97.4	
SILICA GEL				
Final Weight (g)	881.0	912.7	904.7	
Tared Weight (g)	869.7	898.7	897.7	
Adsorbed H_2O (g)	11.3	14.0	7.0	
Total H_2O Collected (g)	111.8	109.1	104.4	

Air Compliance Testing, Inc.
D:\Testing\ACT Test Methods\M026A\Method 26A
(Method 26A-Moisture Recovery Knockout) 1/9/2013
1 of 1

Job Number: 130112 B
Done By / Date: CG / 1/16/13
Final Check By / Date: [illegible] / 1/24/13

Method 4 Gravimetric Calculation for Moisture

Method 26A Sampling Train

	Run 1	Run 2	Run 3
IMPINGER #1			
Final Weight (g)	752.3	718.6	778.6
Tared Weight (g)	681.6	677.3	696.6
Condensed H_2O (ml,g)	70.7	41.3	82.0
IMPINGER #2			
Final Weight (g)	711.0	721.8	687.0
Tared Weight (g)	688.2	681.7	672.8
Condensed H_2O (ml,g)	22.8	40.1	14.2
IMPINGER #3			
Final Weight (g)	600.6	603.8	598.2
Tared Weight (g)	593.6	590.1	597.0
Condensed H_2O (ml,g)	7.0	13.7	1.2
Total Condensed (ml,g)	100.5	95.1	97.4
SILICA GEL			
Final Weight (g)	881.0	912.7	904.7
Tared Weight (g)	869.7	898.7	897.7
Adsorbed H_2O (ml,g)	11.3	14.0	7.0
Total H_2O Collected (ml,g)	111.8	109.1	104.4

Method 3B Field Data

Effective Date: 7/16/12
Rev No. 0
Issued by: Quality Manager

Plant Name: Clean Harbors Recycling Services of Fuel Type:

Test Location: Blue Room, Cooker Room, Still Room, J003, and P017 Exhaust Stack (B)

Pre-Test Leak Check†: Initial Burette Reading - 7.8 ml Final Burette Reading - 7.8 ml

Post-Test Leak Check†: Initial Burette Reading - 9.2 ml Final Burette Reading - 9.3 ml

Pipette Fluid Level in Capillaries: CO2 (Y / N) O2 (Y / N) ~~CO (Y / N)~~

† Leak check the apparatus for 4-minutes. The meniscus in the burette must not change by more than 0.2 ml and liquid level in each pipette must not fall below the bottom of the capillary tubing during this 4-minute interval.

Run Number: 1 Date: 1/18/13 Operator: CG

Time of Sample Collection	Time of Analysis	CO_2* Reading (A)	O_2 Reading (B)	CO Reading (C)	$\%O_2$** (B-A)	%CO*** (C-B)	$\%N_2$ (100-C)
815	1030	0.2	18.7	—	18.5	—	81.80
931	1038	0.1	18.5	—	18.4	—	81.50
	1047	0.1	18.8	—	18.7	—	81.20
	Average	0.1			18.53	—	81.83

Analyzer I.D. - A-ORS-002 Tedlar Bag I.D. - 130112B-1-M3B/TB F_o =

Run Number: 2 Date: 1/18/13 Operator: CG

Time of Sample Collection	Time of Analysis	CO_2* Reading (A)	O_2 Reading (B)	CO Reading (C)	$\%O_2$** (B-A)	%CO*** (C-B)	$\%N_2$ (100-C)
1015	1210	0.2	18.8	—	18.6	—	81.20
1120	1219	0.3	18.7	—	18.4	—	81.30
	1226	0.2	18.7	—	18.5	—	81.30
	Average	0.2			18.50	—	81.27

Analyzer I.D. - A-ORS-002 Tedlar Bag I.D. - 130112B-2-M3B/TB F_o =

Run Number: 3 Date: 1/18/13 Operator: CG

Time of Sample Collection	Time of Analysis	CO_2* Reading (A)	O_2 Reading (B)	CO Reading (C)	$\%O_2$** (B-A)	%CO*** (C-B)	$\%N_2$ (100-C)
1150	1210	0.1	18.6	—	18.5	—	81.40
1253	1217	0.0	18.6	—	18.6	—	81.40
	1228	0.1	18.7	—	18.6	—	81.30
	Average	0.1			18.56	—	81.37

Analyzer I.D. - A-ORS-002 Tedlar Bag I.D. - 130112B-3-M3B/TB F_o =

*If average CO2 ≤ 4% - three analyses must be within 0.2%

**If average O2 < 15% - three analyses must be within 0.3%

***For all CO concentrations - three analyses must be within 0.3%

If average CO2 > 4% - three analyses must be within 0.3%

If average O2 ≥ 15% - three analyses must be within 0.2%

Job Number: 130112 B
Done By / Date: CG / 1/18/13
Final Check By / Date: [illegible] / 1/24/13

Air Compliance Testing, Inc.
D:\TESTING\ACT Test Methods\M003B\Method 3B (Method 3B-Field Data) 1/9/2013
1 of 1

			Low	High
Enter Fuel Type:	NA	**Fo Range**	N/A	N/A
(Coal, NG, Wood, NA)	**N/A**			

Run 1 — **Fo= 17.750** — **Fo is N/A**

	CO2 Reading	O2 Reading	CO Reading	%O2	%CO	%N2	Molecular Weight	Mean Difference
	0.20	**18.70**	**18.70**	18.50	0.00	81.30	28.772	0.009
	0.10	**18.50**	**18.50**	18.40	0.00	81.50	28.752	-0.011
	0.10	**18.80**	**18.80**	18.70	0.00	81.20	28.764	0.001
Average	0.13			18.53	0.00	81.33	28.76	
Sampling QA	**M3 - NO Q/A**			**M3 - NO Q/A**	**M3 - NO Q/A**			

Run 2 — **Fo= 10.286** — **Fo is N/A**

	CO2 Reading	O2 Reading	CO Reading	%O2	%CO	%N2	Molecular Weight	Mean Difference
	0.20	**18.80**	**18.80**	18.60	0.00	81.20	28.776	-0.001
	0.30	**18.70**	**18.70**	18.40	0.00	81.30	28.784	0.007
	0.20	**18.70**	**18.70**	18.50	0.00	81.30	28.772	-0.005
Average	0.23			18.50	0.00	81.27	28.78	
Sampling QA	**M3 - NO Q/A**			**M3 - NO Q/A**	**M3 - NO Q/A**			

Run 3 — **Fo= 35.000** — **Fo is N/A**

	CO2 Reading	O2 Reading	CO Reading	%O2	%CO	%N2	Molecular Weight	Mean Difference
	0.10	**18.60**	**18.60**	18.50	0.00	81.40	28.756	0.003
	0.00	**18.60**	**18.60**	18.60	0.00	81.40	28.744	-0.009
	0.10	**18.70**	**18.70**	18.60	0.00	81.30	28.760	0.007
Average	0.07			18.57	0.00	81.37	28.75	
Sampling QA	**M3 - NO Q/A**			**M3 - NO Q/A**	**M3 - NO Q/A**			

Cyclonic Flow Determination

Effective Date: 7/16/12
Rev No. 0
Issued by: Quality Maneger

Plant Name	Clean Harbors Recycling Services of Ohio LLC
City, State	Hebron, OH
Test Location	Blue Room, Cooker Room, Still Room, J003, and P017 Exhaust Stack (B) UMC-602
Pitot I.D. - T- PIT 606	Manometer I.D. - T- MT13-015 / Umbilical I.D. T- MZW - 408

Run Number - Pre	Run Number -	Run Number -
Date - 1.16.13	Date -	Date -
Barometric Pressure (in.Hg) : 29.10	Barometric Pressure (in.Hg) :	Barometric Pressure (in.Hg) :
Ambient Temperature (°F): 38	Ambient Temperature (°F):	Ambient Temperature (°F):
Barometer ID- DPG-009	Barometer ID-	Barometer ID-
Start Time - 16:00	Start Time -	Start Time -
Finish Time - 16:15	Finish Time -	Finish Time -
Manometer Zero and Level - Yes ☑	Manometer Zero and Level - Yes ☐	Manometer Zero and Level - Yes ☐
Apparatus Leak Check - Done By: BF	Apparatus Leak Check - Done By:	Apparatus Leak Check - Done By:
Pre Impact Side - Pass ☑	Pre Impact Side - Pass ☐	Pre Impact Side - Pass ☐
Pre Static Side - Pass ☑	Pre Static Side - Pass ☐	Pre Static Side - Pass ☐

Test Point	Notes	Yaw Angle (°)	Test Point	Notes	Yaw Angle (°)	Test Point	Notes	Yaw Angle (°)
1		-8	1			1		
2		-4	2			2		
3		+3	3			3		
4		0	4			4		
5		0	5			5		
6		-4	6			6		
7		-10	7			7		
8		-3	8			8		
9		0	9			9		
10		-4	10			10		
11		+2	11			11		
12	Avg 3.5	-4	12			12		
13		0	13			13		
14		-2	14			14		
15		-1	15			15		
16		-4	16			16		
17		-2	17			17		
18		-4	18			18		
19		-5	19			19		
20		-2	20			20		
21		0	21			21		
22		-11	22			22		
23		-3	23			23		
24	Avg 2.83	0	24			24		
25			25			25		
	Avg.			Avg.			Avg.	

Apparatus Leak Check - Done By: BF	Apparatus Leak Check - Done By:	Apparatus Leak Check - Done By:
Post Impact Side - Pass ☑	Post Impact Side - Pass ☐	Post Impact Side - Pass ☐
Post Static Side - Pass ☑	Post Static Side - Pass ☐	Post Static Side - Pass ☐

Note: Yaw angle average is the sum of the absolute values divided by the number of measurements, and must be ≤ 20°.
Yaw angle is the angle measured from the point where zero ΔP should be obtained to the point where zero ΔP is actually obtained

Air Compliance Testing, Inc.
D:\TESTING\ACT Test Methods\M002\Method 2
(Method 2-Cyclonic Flow Determination) 1/9/2013
1 of 1

Job Number: 130112 B
Done By / Date: BF / 1.17.13
Final Check By / Date: BF / 2/4/13

Method 1 Preliminary Field Data-Round

Effective Date: 7/16/12
Rev No. 0
Issued by: Quality Manager

Plant: Clean Harbors Recycling Services of Ohio LLC
City, State: Hebron, OH
Location: Blue Room, Cooker Room, Still Room, J003, and P017 Exhaust Stack (B)

Duct Depth (Inner Diameter):	Port 1	Port 2	Port 3	Port 4
Relative Location	West	South	—	—
From Far Inside Wall to Outside of Port (in.)	42.30	42.30		
Nipple Length and/or Wall Thickness (in.)	6.35	6.35		
Nipple Protrusion (in.)	—	—		
Stack or Duct Depth (Inner Diameter) (in.)	35.95	35.95		
Stack Outer Circumference (in.)	—	—		
Port Hole Inner Diameter (in.)	4.0	4.0		

Sample Port Access	Platform
Elevation of Meter Box from Ground Level (ft)	2
Elevation of Ports from Ground Level (ft)	50
Number of Ports	~~3~~ 4
Direction of Flow	Vertical ↑
Isokinetic Sample (Yes / No)	Yes
Stack Particulate Build-up (Yes / No)	No

Distance Upstream from Flow Disturbance (in.)	42.0
Diameters Upstream from Flow Disturbance (≥ 0.5 D_e)	1.17
Minimum Traverse Points Needed *	24

Distance Downstream from Flow Disturbance (in.)	84.0
Diameters Downstream from Flow Disturbance (≥ 2 D_e)	2.34
Minimum Traverse Points Needed *	24

*Circle Larger of the Two

Stack or Duct Area = 1015.05 in.^{2}

Location of Points in Circular Stacks or Ducts

	4	6	8	10	12	14	16	18	20	22	24
1	6.7	4.4	3.2	2.6	2.1	1.8	1.6	1.4	1.3	1.1	1.1
2	25.0	14.6	10.5	8.2	6.7	5.7	4.9	4.4	3.9	3.5	3.2
3	75.0	29.6	19.4	14.6	11.8	9.9	8.5	7.5	6.7	6.0	5.5
4	93.3	70.4	32.3	22.6	17.7	14.6	12.5	10.9	9.7	8.7	7.9
5		85.4	67.7	34.2	25.0	20.1	16.9	14.6	12.9	11.6	10.5
6		95.6	80.6	65.8	35.6	26.9	22.0	18.8	16.5	14.6	13.2
7			89.5	77.4	64.4	36.6	28.3	23.6	20.4	18.0	16.1
8			96.8	85.4	75.0	63.4	37.5	29.6	25.0	21.8	19.4
9				91.8	82.3	73.1	62.5	38.2	30.6	26.2	23.0
10				97.4	88.2	79.9	71.7	61.8	38.8	31.5	27.2
11					93.3	85.4	78.0	70.4	61.2	39.3	32.3
12					97.9	90.1	83.1	76.4	69.4	60.7	39.8
13						94.3	87.5	81.2	75.0	68.5	60.2
14						98.2	91.5	85.4	79.6	73.8	67.7
15							95.1	89.1	83.5	78.2	72.8
16							98.4	92.5	87.1	82.0	77.0
17								95.6	90.3	85.4	80.6
18								98.6	93.3	88.4	83.9
19									96.1	91.3	86.6
20									98.7	94.0	89.5
21										96.5	92.1
22										98.9	94.5
23											96.8
24											98.9

Note:
1) Stacks having a diameter greater than 24in, shall have no traverse points located within 1.0in of the Stack walls.

2) Stacks having a diameter less than or equal to 24in, shall have no traverse points located within .50in of the Stack walls.

3) Add nipple protrusion length to Point 1 only. Actual nipple length = (length - protrusion)

Relocate to a distance equal to the inside diameter of the nozzle being used or to the above minimum distances, whichever is larger.

Job Number: 130112 B
Done By / Date: JL / 1/17/13
Final Check By / Date: SHC / 2/14/13

Port Number	1	2
Relative Location	West	South
From Far Wall to Outside of Port (in.)	42.30	42.30
Nipple Length or Wall Thickness (in.)	6.35	6.35
Port Protrusion Length (opt) (in.)	0.00	0.00
Depth of Stack or Duct (in.)	35.95	35.95
Stack or Duct Type	Circular	
Port Hole Inner Diameter (in.)	4.0	
Stack or Duct Width (If Rectangular) (in.)		#N/A
Stack Outer Circumference (in.)		
Number of Ports	2.0	
Elevation of Meter Box from Ground Level (ft)	3.0	
Elevation of Ports from Ground Level (ft)	50.0	

Equivalent Diameter = D_e (in.)

$$De = \frac{2 \times (\text{Depth} \times \text{Width})}{(\text{Depth} + \text{Width})} = \text{----}$$

"Velocity" or "Particulate" Traverse	particulate
Distance Upstream from Flow Disturbance (in.)	42.0
Diameters Upstream from Flow Disturbance (³ 0.5 De)	1.17
Minimum Traverse Points Needed for a Velocity Traverse *	16
Minimum Traverse Points Needed for a Particulate Traverse *	24
Distance Downstream from Flow Disturbance (in.)	84.0
Diameters Downstream from Flow Disturbance (³ 2 De)	2.34
Minimum Traverse Points Needed for a Velocity Traverse *	16
Minimum Traverse Points Needed for a Particulate Traverse *	24
Minimum Traverse Points	24
Traverse Point Overide	
Duct Area - in^2	1015.05
Duct Area - ft^2	7.0490
Diameter Check via Circumference (in.)	0.0000

Location of Points in Circular Stacks or Ducts

	4	6	8	10	12	14	16	18	20	22	24
1	6.7	4.4	3.2	2.6	2.1	1.8	1.6	1.4	1.3	1.1	1.1
2	25.0	14.6	10.5	8.2	6.7	5.7	4.9	4.4	3.9	3.5	3.2
3	75.0	29.6	19.4	14.6	11.8	9.9	8.5	7.5	6.7	6.0	5.5
4	93.3	70.4	32.3	22.6	17.7	14.6	12.5	10.9	9.7	8.7	7.9
5		85.4	67.7	34.2	25.0	20.1	16.9	14.6	12.9	11.6	10.5
6		95.6	80.6	65.8	35.6	26.9	22.0	18.8	16.5	14.6	13.2
7			89.5	77.4	64.4	36.6	28.3	23.6	20.4	18.0	16.1
8			96.8	85.4	75.0	63.4	37.5	29.6	25.0	21.8	19.4
9				91.8	82.3	73.1	62.5	38.2	30.6	26.2	23.0
10				97.4	88.2	79.9	71.7	61.8	38.8	31.5	27.2
11					93.3	85.4	78.0	70.4	61.2	39.3	32.3
12					97.9	90.1	83.1	76.4	69.4	60.7	39.8
13						94.3	87.5	81.2	75.0	68.5	60.2
14						98.2	91.5	85.4	79.6	73.8	67.7
15							95.1	89.1	83.5	78.2	72.8
16							98.4	92.5	87.1	82.0	77.0
17								95.6	90.3	85.4	80.6
18								98.6	93.3	88.4	83.9
19									96.1	91.3	86.8
20									98.7	94.0	89.5
21										96.5	92.1
22										98.9	94.5
23											96.8
24											98.9

Note:

1) Stacks having a diameter greater than 24in, shall have no traverse points located within 1.0in of the Stack walls.

2) Stacks having a diameter less than or equal to 24in, shall have no traverse points located within .50in of the Stack walls.

3) Add nipple protrusion length to Point 1 only. Actual nipple length = (length - protrusion)

Relocate to a distance equal to the inside diameter of the nozzle being used or to the above minimum distances, whichever is larger.

Number of Ports:	2.0
Direction of Flow:	up
Isokinetic Sample: Yes /	Yes
Stack Build-up: Yes / No	No

Port	Point	% of Duct Depth	Dist. From Inside Wall (Decimal)	Dist. From Outside Wall (Decimal)
1	1	2.1	1.0	7.4
1	2	6.7	2.4	8.8
1	3	11.8	4.2	10.6
1	4	17.7	6.4	12.7
1	5	25	9.0	15.3
1	6	35.6	12.8	19.1
1	7	64.4	23.2	29.5
1	8	75	27.0	33.3
1	9	82.3	29.6	35.9
1	10	88.2	31.7	38.1
1	11	93.3	33.5	39.9
1	12	97.9	35.0	41.3
2	1	2.1	1.0	7.4
2	2	6.7	2.4	8.8
2	3	11.8	4.2	10.6
2	4	17.7	6.4	12.7
2	5	25	9.0	15.3
2	6	35.6	12.8	19.1
2	7	64.4	23.2	29.5
2	8	75	27.0	33.3
2	9	82.3	29.6	35.9
2	10	88.2	31.7	38.1
2	11	93.3	33.5	39.9
2	12	97.9	35.0	41.3

Method 26A Probe Nozzle Inspection

Effective Date: 7/16/12
Rev No. 0
Issued by: Quality Manager

The sampling nozzle must be calibrated before use in a source experiment. Calibration should be done in the laboratory and checked just before use in the field. Inside / outside calipers are used to measure the interior nozzle diameter to the nearest 0.025mm (0.001 inch).

The calipers are inserted as close to the edge of the nozzle opening as possible; readings are taken on three separate diameters and recorded. The average of the three readings will be the Assignied Nozzle Size. Each reading must agree within 0.1 mm (0.004 inch), or the nozzle must be reshaped. Any nozzle that has been nicked, dented, or corroded must be reshaped and recalibrated. All calibrated nozzles should be permanently identified.

Run # 1, 2, 3
Nozzle ID # G-10-4

Measured Nozzle Size (inches)	Assigned Nozzle Size (inches)	Difference Between High and Low Measurements	
.306			
.305	.305	.002	<= 0.004in
.304			

Run #
Nozzle ID #

Measured Nozzle Size (inches)	Assigned Nozzle Size (inches)	Difference Between High and Low Measurements	
	~~.305~~		<= 0.004in

Run #
Nozzle ID #

Measured Nozzle Size (inches)	Assigned Nozzle Size (inches)	Difference Between High and Low Measurements	
			<= 0.004in

Air Compliance Testing, Inc.
D:\Testing\ACT Test Methods\M026A\Method 26A (Method 26A-Probe Nozzle Inspection) 2/4/2013
1 of 1

Job Number: 130112 B
Done By / Date: CG 1/18/13
Final Check By / Date: QAC 12/4/13

Type S Pitot Tube Inspection

Alignment and Tubing Dimensions

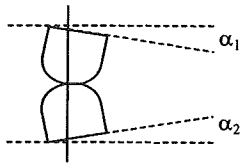

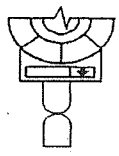

Degree indicating level position for determining α_1 and α_2.

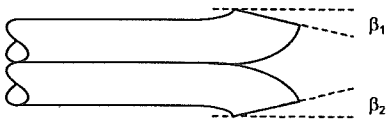

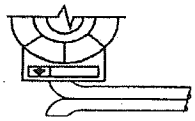

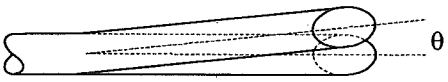

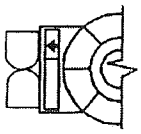

Degree indicating level position for determining θ.

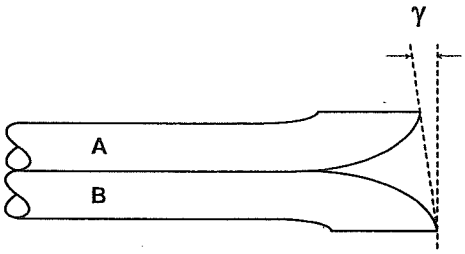

Degree indicating level position for determining γ then calculating Z.

Probe / Pitot Number	T-PIT-606
Level and Perpendicular	☑
No Obstructions	☑
No Damage	☑
α_1 ($-10° < \alpha_1 < +10°$)	-9.0
α_2 ($-10° < \alpha_2 < +10°$)	5.0
β_1 ($-5° < \beta_1 < +5°$)	-4.0
β_2 ($-5° < \beta_2 < +5°$)	0.0
γ	0.92
θ	
A	0.918
z= A tan γ (< 0.125")	0.015
w= A tan θ (< 0.03125")	0.000
D_t (0.1875" < D_t < 0.375")	0.375
P_A ($1.05D_t < P_A < 1.5D_t$)	0.459
P_B ($1.05D_t < P_B < 1.5D_t$)	0.459
$P_A = P_B \pm 0.0625$	0.000

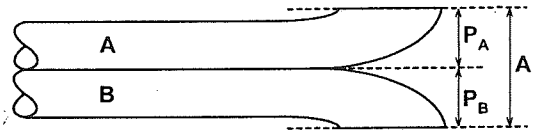

Assembly Inter-Component Spacing Requirements

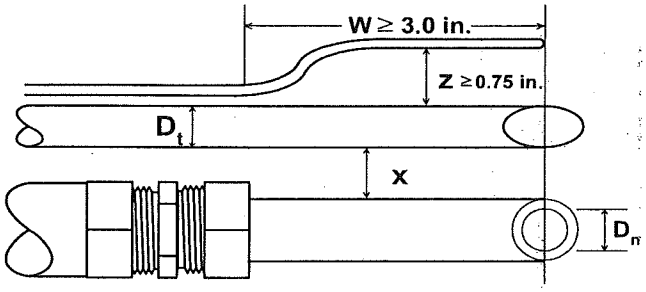

Effective Length (in.)	73.50
W (≥ 3.0")	3.034
-or- AA (≥ 2.0")	
X	
D_n	
X / D_n (≥ 1.5)	
Y (≥ 3.0")	
Z ≥ 0.75"	0.785

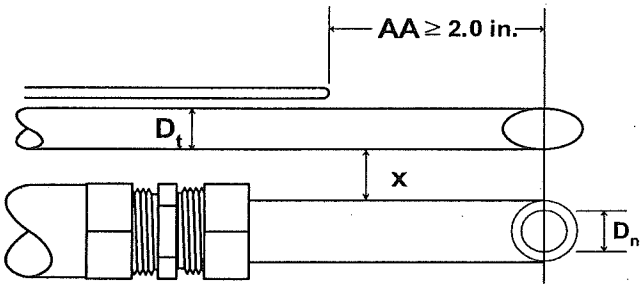

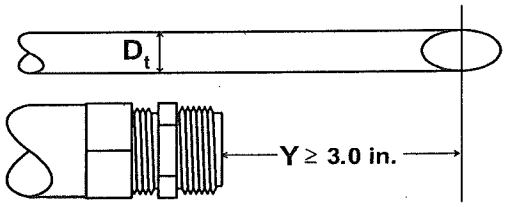

Job Number: 121209A
Done By: WD / Date: 12/28/2012 14:25

Type S Pitot Tube Inspection

Alignment and Tubing Dimensions

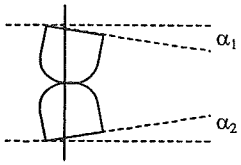

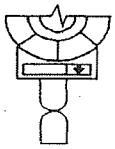

Degree indicating level position for determining α_1 and α_2.

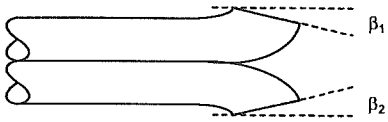

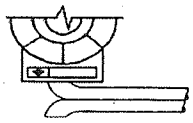

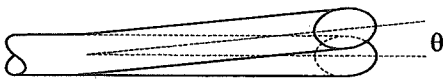

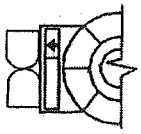

Degree indicating level position for determining θ.

Probe / Pitot Number	PIT-605
Level and Perpendicular	☑
No Obstructions	☑
No Damage	☑
α_1 $(-10° < \alpha_1 < +10°)$	0.0
α_2 $(-10° < \alpha_2 < +10°)$	-2.0
β_1 $(-5° < \beta_1 < +5°)$	0.0
β_2 $(-5° < \beta_2 < +5°)$	0.0
γ	0.00
θ	-1.00
A	0.822
z= A tan γ (< 0.125")	0.000
w= A tan θ (< 0.03125")	-0.014
D_t (0.1875" < D_t < 0.375")	0.375
P_A $(1.05D_t < P_A < 1.5D_t)$	0.411
P_B $(1.05D_t < P_B < 1.5D_t)$	0.411
$P_A = P_B \pm 0.0625$	0.000

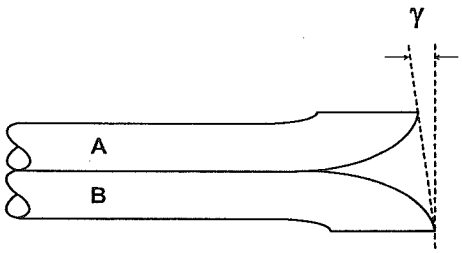

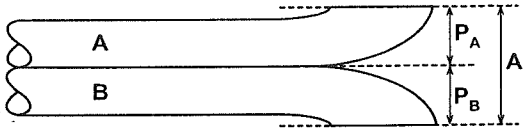

Degree indicating level position for determining γ then calculating Z.

Assembly Inter-Component Spacing Requirements

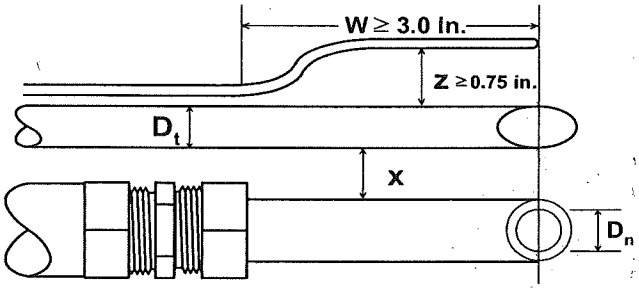

Effective Length (in.)	73.25
W (≥ 3.0")	3.600
-or- AA (≥ 2.0")	
X	
D_n	
X / D_n (≥ 1.5)	
Y (≥ 3.0")	
Z ≥ 0.75"	0.800

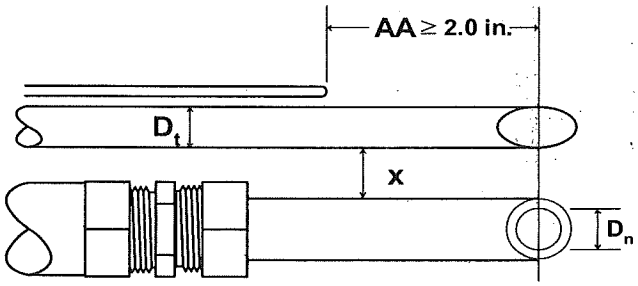

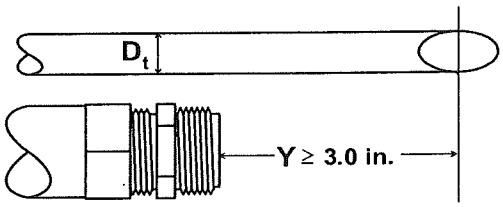

Job Number: 121005D

Air Compliance Testing, Inc. (Method 2.xls)

Done By: PB / Date: 12/31/2012 14:00

Type S Pitot Tube Inspection

Alignment and Tubing Dimensions

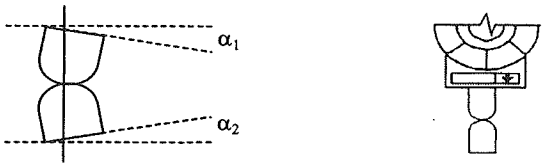

Degree indicating level position for determining α_1 and α_2.

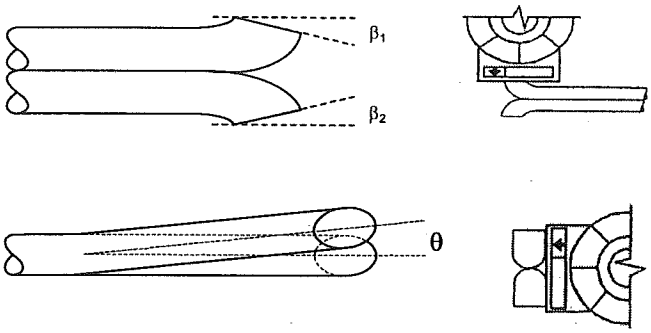

Degree indicating level position for determining θ.

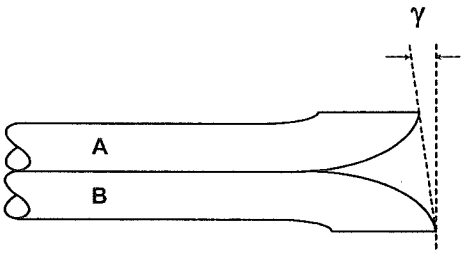

Degree indicating level position for determining γ then calculating Z.

Probe / Pitot Number	PRB-613
Level and Perpendicular	☑
No Obstructions	☑
No Damage	☑
α_1 $(-10° < \alpha_1 < +10°)$	0.0
α_2 $(-10° < \alpha_2 < +10°)$	-1.0
β_1 $(-5° < \beta_1 < +5°)$	2.0
β_2 $(-5° < \beta_2 < +5°)$	1.0
γ	1.00
θ	-2.00
A	0.980
z= A tan γ (< 0.125")	0.017
w= A tan θ (< 0.03125")	-0.034
D_t (0.1875" < D_t < 0.375")	0.375
P_A $(1.05D_t < P_A < 1.5D_t)$	0.490
P_B $(1.05D_t < P_B < 1.5D_t)$	0.490
$P_A = P_B \pm 0.0625$	0.000

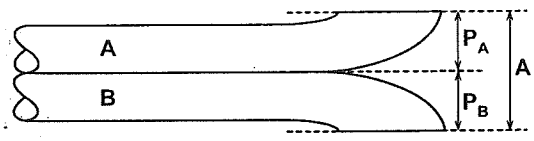

Assembly Inter-Component Spacing Requirements

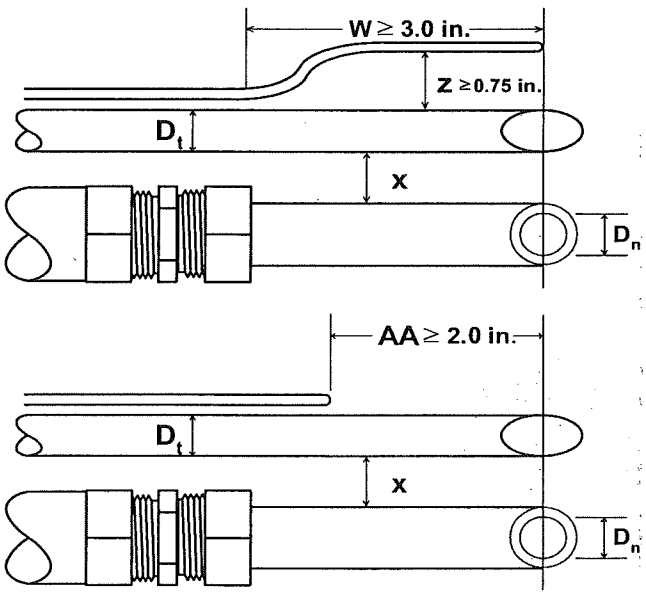

Effective Length (in.)	75.50
W (≥ 3.0")	7.250
-or- AA (≥ 2.0")	
X	1.260
D_n	0.400
X / D_n (≥ 1.5)	3.150
Y (≥ 3.0")	4.750
Z ≥ 0.75"	1.330

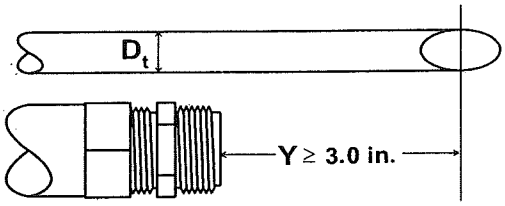

Job Number: 120712
Done By: JL / Date: 12/7/2012 14:24

Type S Pitot Tube Inspection

Alignment and Tubing Dimensions

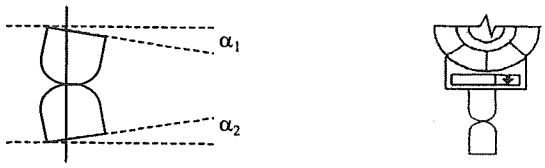

Degree indicating level position for determining α_1 and α_2.

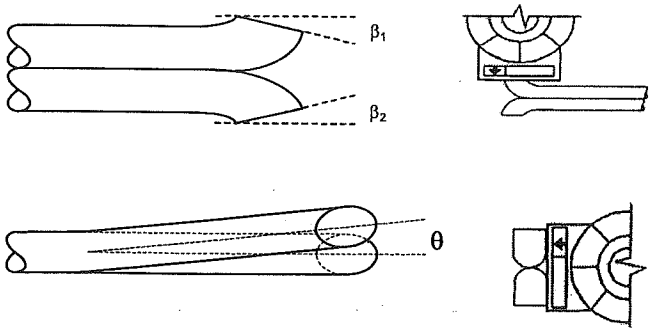

Degree indicating level position for determining θ.

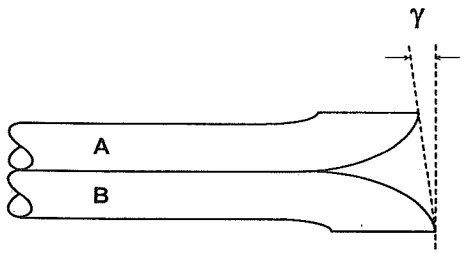

Degree indicating level position for determining γ then calculating Z.

Probe / Pitot Number	T-PRB-606
Level and Perpendicular	☑
No Obstructions	☑
No Damage	☑
α_1 $(-10° < \alpha_1 < +10°)$	-1.0
α_2 $(-10° < \alpha_2 < +10°)$	3.0
β_1 $(-5° < \beta_1 < +5°)$	2.0
β_2 $(-5° < \beta_2 < +5°)$	4.0
γ	0.00
θ	0.00
A	0.920
$z = A \tan\gamma$ (< 0.125")	0.000
$w = A \tan\theta$ (< 0.03125")	0.000
D_t (0.1875" < D_t < 0.375")	0.375
P_A ($1.05D_t < P_A < 1.5D_t$)	0.460
P_B ($1.05D_t < P_B < 1.5D_t$)	0.460
$P_A = P_B \pm 0.0625$	0.000

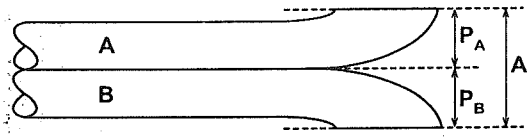

Assembly Inter-Component Spacing Requirements

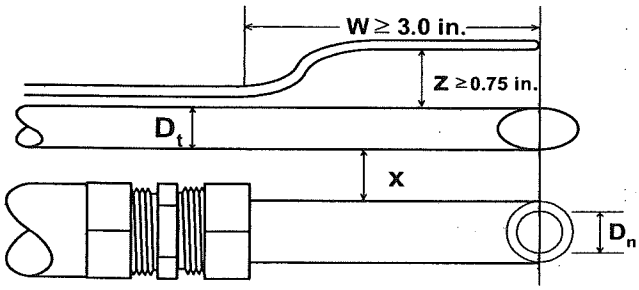

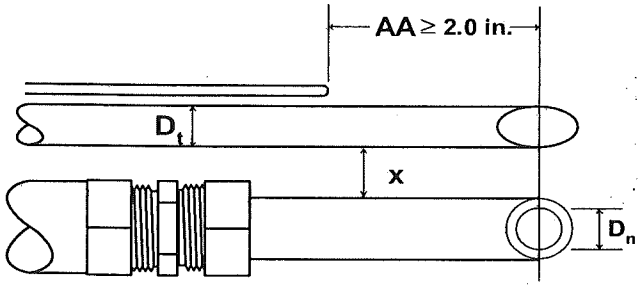

Effective Length (in.)	73.40
W (≥ 3.0")	3.020
-or- AA (≥ 2.0")	
X	
D_n	
X / D_n (≥ 1.5)	
Y (≥ 3.0")	
Z ≥ 0.75"	0.780

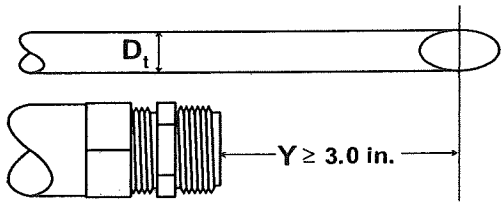

Job Number: 130102A

Air Compliance Testing, Inc. (Method 2.xls)

Done By: WD / Date: 1/11/2013 18:13

Type S Pitot Tube Inspection

Alignment and Tubing Dimensions

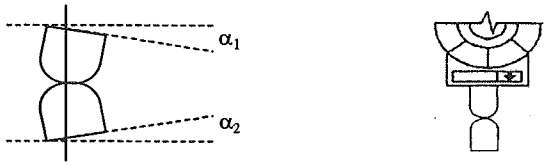

Degree indicating level position for determining α_1 and α_2.

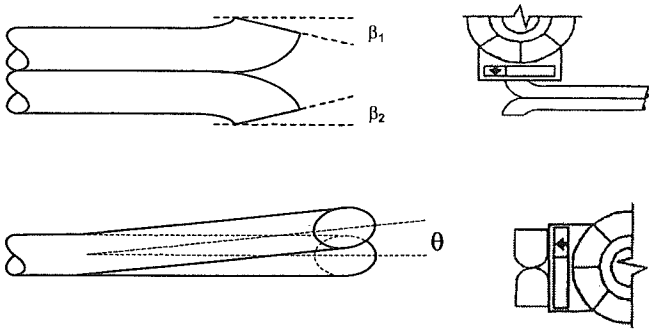

Degree indicating level position for determining θ.

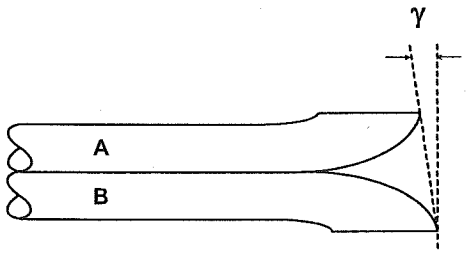

Degree indicating level position for determining γ then calculating Z.

Probe / Pitot Number	T-PRB-606
Level and Perpendicular	☑
No Obstructions	☑
No Damage	☑
α_1 $(-10° < \alpha_1 < +10°)$	-1.0
α_2 $(-10° < \alpha_2 < +10°)$	3.0
β_1 $(-5° < \beta_1 < +5°)$	2.0
β_2 $(-5° < \beta_2 < +5°)$	4.0
γ	0.00
θ	0.00
A	0.920
z= A tan γ (< 0.125")	0.000
w= A tan θ (< 0.03125")	0.000
D_t (0.1875" < D_t < 0.375")	0.375
P_A ($1.05D_t < P_A < 1.5D_t$)	0.460
P_B ($1.05D_t < P_B < 1.5D_t$)	0.460
$P_A = P_B \pm 0.0625$	0.000

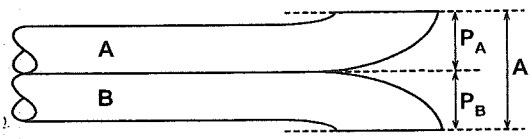

Assembly Inter-Component Spacing Requirements

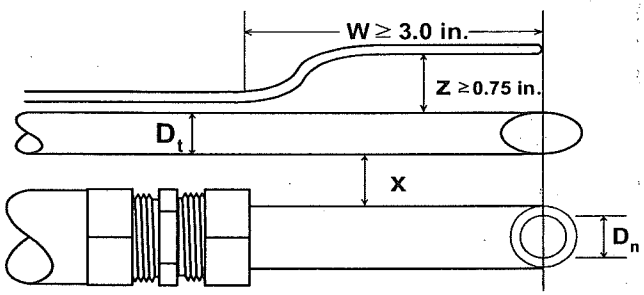

Effective Length (in.)	73.40
W (≥ 3.0")	3.020
-or- AA (≥ 2.0")	
X	
D_n	
X / D_n (≥ 1.5)	
Y (≥ 3.0")	
Z ≥ 0.75"	0.780

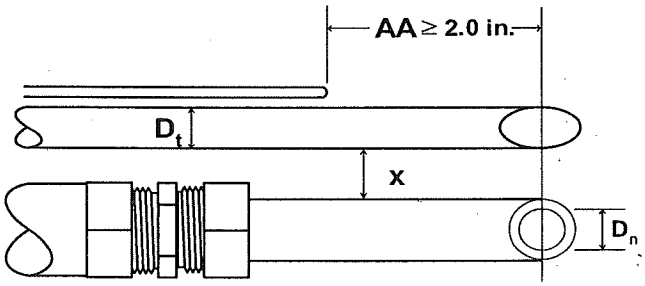

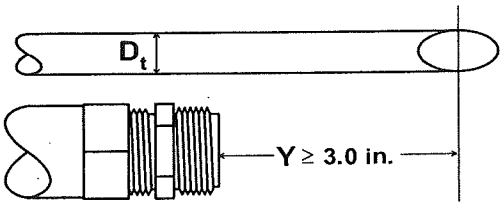

Job Number: 130102A
Done By: WD / Date: 1/11/2013 18:13

Type S Pitot Tube Inspection

Alignment and Tubing Dimensions

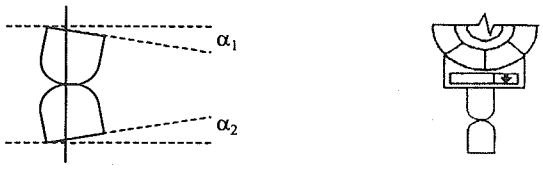

Degree indicating level position for determining α_1 and α_2.

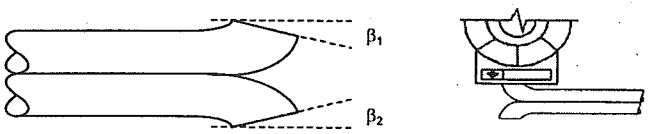

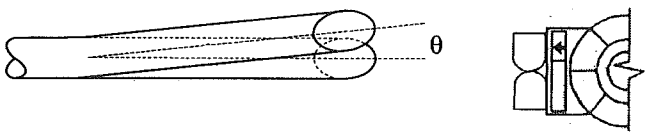

Degree indicating level position for determining θ.

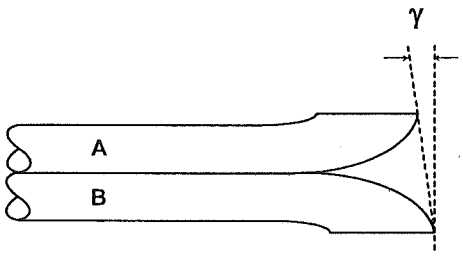

Degree indicating level position for determining γ then calculating Z.

Probe / Pitot Number	T-PRB-613
Level and Perpendicular	☑
No Obstructions	☑
No Damage	☑
α_1 $(-10° < \alpha_1 < +10°)$	-2.0
α_2 $(-10° < \alpha_2 < +10°)$	-3.0
β_1 $(-5° < \beta_1 < +5°)$	1.0
β_2 $(-5° < \beta_2 < +5°)$	1.0
γ	1.00
θ	-1.00
A	0.982
z= A tan γ (< 0.125")	0.017
w= A tan θ (< 0.03125")	-0.017
D_t (0.1875" < D_t < 0.375")	0.375
P_A $(1.05D_t < P_A < 1.5D_t)$	0.491
P_B $(1.05D_t < P_B < 1.5D_t)$	0.491
$P_A = P_B \pm 0.0625$	0.000

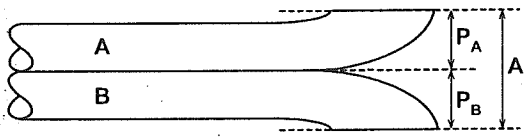

Assembly Inter-Component Spacing Requirements

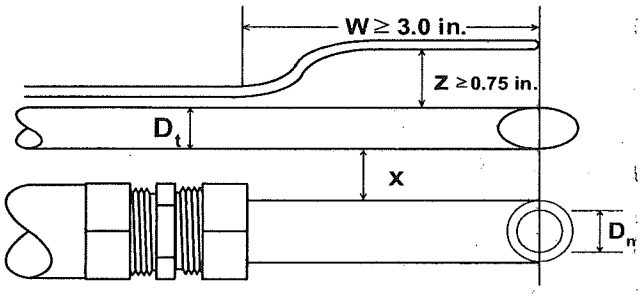

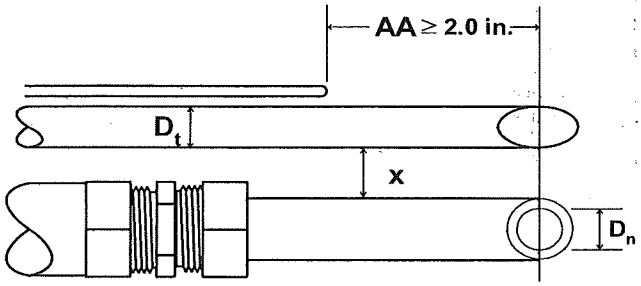

Effective Length (in.)	63.50
W (≥ 3.0")	6.900
-or- AA (≥ 2.0")	
X	1.100
D_n	0.460
X / D_n (≥ 1.5)	2.391
Y (≥ 3.0")	4.200
Z ≥ 0.75"	1.400

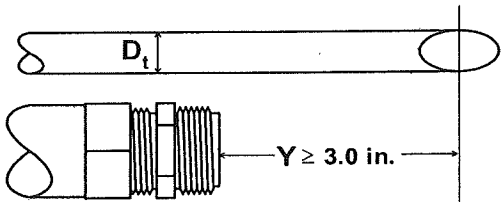

Job Number: 130212A

Method 4 Thermocouple System Audit

Referer	T-THC-010
Tem	T-MTB- 006
	T-UMC- 606

Probe/Filter Thermocouple ID	T-PRB- 304	T-PRB- 303	
[illegible]	T-FXT- 012	T-FXT- 018	T-FXT-
[illegible]	T-UMA- 032	T-UMA- 032	T-UMA-

Sample Train Thermocouple Audit

	Run 1	Run 2	Run 3
Ref. Thermometer Temp (°F)	60.2	60.4	
Stack	60	60	
Meterbox Temp IN (°F)	58	55	
[illegible]	58	56	
	60	59	
	59	59	

Meterbox Thermocouple Audit

Thermocouple Simulat Setting (°F)	[illegible]	[illegible]	[illegible]
50	51	50	51
100	102	101	100
200	201		
300			
400			
600			
800			
1000			
1500			

Tolerance Ranges

Stack ± 8.0°F or ± 1.5% absolute

Filter Exit ± 5.4°F

Meter Box ± 5.4°F

Impinger Exit ± 2.0°F

Job Number: 121003

Air Compliance Testing Inc.

Performed by : JL Date: 12/10/2012

Method 4 Thermocouple System Audit

Run 1	Probe No. - T-PRB-409			Umbilical Adapter No. - T-UMA-017	
	Meter Box No. - T-MTB-015			Filter Exit No. - T-FXT-025	
	Umbilical No. - T-UMC-104/305			Filter Box No. - T-FLB-001	
Reference Thermometer °F	Stack °F	Meter In °F	Meter Out °F	Filter Exit °F	Impinger Exit °F
T-THC-011	35.0	-	43.0	41.0	38.0

Run 2	Probe No. - T-PRB-402			Umbilical Adapter No. - T-UMA-016	
	Meter Box No. - T-MTB-015			Filter Exit No. - T-FXT-012	
	Umbilical No. - T-UMC-104/305			Filter Box No. - T-FLB-001	
Reference Thermometer °F	Stack °F	Meter In °F	Meter Out °F	Filter Exit °F	Impinger Exit °F
T-THC-011	35.0	-	43.0	43.0	39.0

Run 3	Probe No. -			Umbilical Adapter No. -	
	Meter Box No. -			Filter Exit No. -	
	Umbilical No. -			Filter Box No. -	
Reference Thermometer °F	Stack °F	Meter In °F	Meter Out °F	Filter Exit °F	Impinger Exit °F

Thermocouple	Primary Meter Box No. - T-MTB-005 REFERENCE THERMOCOUPLE ID: T-THC-010		
Simulator Setting °F	Stack °F	Filter Exit °F	Impinger Exit °F
50	48.0	48.0	48.0
100	98.0	98.0	98.0
200	200.0	200.0	
300	300.0	300.0	
400	399.0		
600	600.0		
800	801.0		
1000	1002.0		
1500	1501.0		

Tolerance Ranges

Stack ± 8.0°F or ± 1.5% absolute

Filter Exit ± 5.4°F

Meter Box ± 5.4°F

Impinger Exit ± 2.0°F

Thermocouple Simulator: Omega Model CL23A - Type K - Range -328 to 2502°F

Serial # T-286993

Method 2 Post-Test Thermocouple Check

ALT-011 Post-Test Stack Thermocouple System Check Procedure

Reference Thermometer ID and Serial No. :	T-THC-010 s/n 1-229854 (4/6/13)
Temperature Display ID (Hanna/MTB) :	T-MTB-006
Umbilical Cord I.D. :	T-UMC-102
Umbilical Cord I.D. :	
Umbilical Cord I.D. :	
Continuity Check Performed:	☑

	Run 1	Run 2	Run 3	Run 4
Probe/Pitot ID:	T-PIT-605	T-PIT-605	T-PIT-605	
Reference Thermometer Ambient Readout (°F):	63	63	63	
Stack Temperature Thermocouple Ambient Readout (°F):	61	61	61	
Temperature Difference (must be ±2°F):	2	2	2	0

Air Compliance Testing, Inc.

Job Number: 130112A

Performed by: WD Date: 02/18/2013

issued 9/4/2012 rev 11/9/12

Method 2 Post-Test Thermocouple Check

ALT-011 Post-Test Stack Thermocouple System Check Procedure

Reference Thermometer ID and Serial No. :	T-THC-010 s/n 1-229854 (4/6/13)
Temperature Display ID (Hanna/MTB) :	T-MTB-015
Umbilical Cord I.D. :	T-UMC-606
Umbilical Cord I.D. :	
Umbilical Cord I.D. :	
Continuity Check Performed:	☑

	Run 1	Run 2	Run 3	Run 4
Probe/Pitot ID:	T-PRB-613	T-PRB-613	T-PRB-613	
Reference Thermometer Ambient Readout (°F):	59	59	59	
Stack Temperature Thermocouple Ambient Readout (°F):	58	58	58	
Temperature Difference (must be ±2°F):	1	1	1	0

Air Compliance Testing, Inc.

Job Number: 130112B

Performed by: WD Date: 02/18/2013

issued 9/4/2012 rev 11/9/12

Method 2 Post-Test Thermocouple Check

ALT-011 Post-Test Stack Thermocouple System Check Procedure

Reference Thermometer ID and Serial No. :	T-THC-010 s/n 1-229854 (4/6/13)
Temperature Display ID (Hanna/MTB) :	T-MTB-015
Umbilical Cord I.D. :	T-UMC-606
Umbilical Cord I.D. :	
Umbilical Cord I.D. :	
Continuity Check Performed:	☑

	Run 1	Run 2	Run 3	Run 4
Probe/Pitot ID:	T-PRB-613	T-PRB-613	T-PRB-613	
Reference Thermometer Ambient Readout (°F):	59	59	59	
Stack Temperature Thermocouple Ambient Readout (°F):	58	58	58	
Temperature Difference (must be ±2°F):	1	1	1	0

Air Compliance Testing, Inc.

Job Number: 130112B

Performed by: WD Date: 02/18/2013

issued 9/4/2012 rev 11/9/12

Method 4 Pre-Test Orifice Meter Check

Effective Date: 7/16/12
Rev No. 0
Issued by: Quality Manager

✓ Assemble meter box - level / zero the manometer

✓ Operate the meter box at the ΔH@ pressure differential for at least **10 minutes**.

The ΔH@ number is taken from the meter console calibration sheet or the tag.

✓ *During the warm-up period, verify flow through the Method 3 flowmeter.*

✓ Record the dry gas meter volume, meter temperatures and barometric pressure (in.Hg).

Meter Box No. **T-MTB-** 006 Calibration Date 11.29.12

Pump No. **T-PMP-** 006 Barometric Pressure (in.Hg) 29.09

Gamma (γ) 0.9941 Initial Dry Gas Meter Volume (cf) 66.10

ΔH@ 2.156 Final Dry Gas Meter Volume (cf) 73.565

Time (min)	Meter In (°F)	Meter Out (°F)
2	—	48
4	—	48
6	—	48
8	—	49
10	—	49
Avg.	48.4	

✓ Calculate the Dry Gas Meter Calibration Value (γ_c) and compare γ_c against the Dry Gas Meter Calibration Factor (γ) to determine if $\gamma_c = \gamma \pm 3\%$

PASS If the γ_c is not within this range, the Meter Box should be investigated before beginning the test.

Air Compliance Testing, Inc.
D:\Testing\ACT Test Methods\M004\Method 4
(Method 4-Pre-Test Orifice Meter Check) 1/9/2013
1 of 1

Job Number: 130112 A
Done By / Date: PB / ~~11.29.12~~ 1.17.13
Final Check By / Date: [illegible] / 1/24/13

Method 4 Pre-Test Orifice Meter Check

Method 4 Sampling Train

Meter Box No.	006	Initial Dry Gas Meter Volume	66.100
Calibration Date	11/29/12	Final Dry Gas Meter Volume	73.565
		Net Dry Gas Meter Volume	7.465
γ =	0.9941		
$\Delta H@$ =	2.156	Barometric Pressure (inHg)	29.09

Time (min)	Meter In (°F)	Meter Out (°F)
2	48	48
4	48	48
6	48	48
8	49	49
10	49	49
Avg.	48.4	48.4
Avg. of Avgs.	48.4	

_____ Calculate the Dry Gas Meter Calibration Value (γ_c)

$$\gamma_c = (10 / Vm) * [0.0319 (Tm/Pbar]^{1/2}$$

$$0.97(\gamma) < \gamma_c < 1.03(\gamma)$$

0.9643 < **1.0002** < 1.0239

PASS

Method 4 Pre-Test Orifice Meter Check

Effective Date: 7/16/12
Rev No. 0
Issued by: Quality Manager

✓ Assemble meter box - level / zero the manometer

✓ Operate the meter box at the ΔH@ pressure differential for at least **10 minutes**.

The ΔH@ number is taken from the meter console calibration sheet or the tag.

✓ *During the warm-up period, verify flow through the Method 3 flowmeter.*

✓ Record the dry gas meter volume, meter temperatures and barometric pressure (in.Hg).

Meter Box No. **T-MTB-** 015

Calibration Date 11.29.12

Pump No. **T-PMP-** 015

Barometric Pressure (in.Hg) 29.09

Gamma (γ) 0.9836

Initial Dry Gas Meter Volume (cf) 562.20

ΔH@ 2.244

Final Dry Gas Meter Volume (cf) 569.797

Time (min)	Meter In (°F)	Meter Out (°F)
2	—	48
4	—	49
6	—	49
8	—	49
10	—	49
Avg.	48.8	

PASS Calculate the Dry Gas Meter Calibration Value (γ_c) and compare γ_c against the Dry Gas Meter Calibration Factor (γ) to determine if $\gamma_c = \gamma \pm 3\%$

PASS If the γ_c is not within this range, the Meter Box should be investigated before beginning the test.

Air Compliance Testing, Inc.
D:\Testing\ACT Test Methods\M004\Method 4
(Method 4-Pre-Test Orifice Meter Check) 1/9/2013
1 of 1

Job Number: 130112 B
Done By / Date: PB / 1.17.2013
Final Check By / Date: [illegible] / 2/4/13

Method 4 Pre-Test Orifice Meter Check

Method 26A Sampling Train

Meter Box No.	015	Initial Dry Gas Meter Volume	562.200
Calibration Date	11/29/12	Final Dry Gas Meter Volume	569.797
		Net Dry Gas Meter Volume	7.597
γ =	0.9836		
$\Delta H@$ =	2.244	Barometric Pressure (inHg)	29.09

Time (min)	Meter In (°F)	Meter Out (°F)
2	48	48
4	49	49
6	49	49
8	49	49
10	49	49
Avg.	48.8	48.8
Avg. of Avgs.	48.8	

_____ Calculate the Dry Gas Meter Calibration Value (γ_c)

$$\gamma_c = (10 / Vm) * [0.0319 (Tm/Pbar]^{1/2}$$

$$0.97(\gamma) < \gamma_c < 1.03(\gamma)$$

0.9541 < **0.9832** < 1.0131

PASS

Meter Box Pre-Test Leak Check

- ☑ Remove the front panel from the meter box
- ☑ Disconnect the fan
- ☑ Hook up the proper pump to the meter box
- ☑ Close both the fine and coarse adjustment valves
- ☑ Connect the DH hoses on the front of the meter box
- ☑ Remove the copper elbow from stainless tube at the exit side of gas meter
- ☑ Stopper the stainless tube with a rubber stopper
- ☑ Disconnect the DH static line from the orifice (bottom)
- ☑ Plug in leak check tube into the static side of the orifice
- ☑ Blowing into the leak check tube, pressurize the system to 5-7 inches and clamp off
- ☑ Hold for one minute
- ☑ No leakage should occur. If leak is present, it must be corrected
- ☑ Affix (w/ electrical tape) the copper elbow onto the stainless tube at the exit side of gas meter
- ☑ Reassemble meter box
- ☑ Plug in capped swagelok stem at sample inlet
- ☑ Start pump, bringing system vacuum to at least 15 in. Hg
- ☑ Note DGM reading, start timer
- ☑ Observe DGM for one minute
- ☑ No leakage should occur. If leak is present, it must be corrected
- ☑ Check oil wick position (should be 1/4" above the black O-ring)
- ☑ Check pump oil level (should be at fill line)

Meter Box Number MTB- 006

Pump Number PMP- 006

Method 4 Pre-Test Meter Calculation Orifice Calibration Data

Meter Box I.D:	T - MTB - 006
Meter Box Serial Number:	905013
Standard Meter I.D:	T - DGM - 006
Temp Sensor I.D:	T - DGM 006
Barometer I.D:	T DPG- 006
Meter Box Level?	☑

Standard Meter

Calibrated By:	Apex Instruments Inc.
Calibration Date:	February 16, 2012
Gamma:	0.9977
Serial Number:	1512377

REMOVE CAPS FROM STANDARD METER

Run 1

Pressures

ΔH:	1.00	in.$H_2$0
Meter Box Vac:	5.0	in.Hg
P Bar:	28.80	in.Hg

Meter Readings

	Time	Std Meter	Meter Box
Begin	0.0	419.960	427.214
End	12.0	426.218	433.520
Net	12.0	6.258	6.306

(>5.0 dcf)

Temperatures

Time (min)	Std Meter In	Std Meter Out	Meter Box In	Meter Box Out
4	62.0	62.0		67.0
8	62.0	62.0		67.0
12	62.0	62.0		68.0
Avg.	62.00		67.33	

Run 2

Pressures

ΔH:	2.00	in.$H_2$0
Meter Box Vac:	5.0	in.Hg
P Bar:	28.80	in.Hg

Meter Readings

	Time	Std Meter	Meter Box
Begin	0.0	428.644	435.974
End	12.0	437.276	444.724
Net	12.0	8.632	8.750

(>5.0 dcf)

Temperatures

Time (min)	Std Meter In	Std Meter Out	Meter Box In	Meter Box Out
4	63.0	63.0		69.0
8	63.0	63.0		70.0
12	63.0	63.0		70.0
Avg.	63.00		69.67	

Run 3

Pressures

ΔH:	3.00	in.$H_2$0
Meter Box Vac:	5.0	in.Hg
P Bar:	28.80	in.Hg

Meter Readings

	Time	Std Meter	Meter Box
Begin	0.0	438.479	445.951
End	12.0	449.150	456.755
Net	12.0	10.671	10.804

(>5.0 dcf)

Temperatures

Time (min)	Std Meter In	Std Meter Out	Meter Box In	Meter Box Out
4	63.0	63.0		71.0
8	63.0	63.0		71.0
12	63.0	63.0		71.0
Avg.	63.00		71.00	

ΔH:	$\Delta H_@$	γ
1	2.101	0.9977
2	2.207	0.9917
3	2.161	0.9929
AVG.	2.156	0.9941

* Adjust and recalculate if γ does not equal 1.00 ± 0.02

Air Compliance Testing, Inc.
(112912-Pre-Test Meter Calc) 1/31/2013

Job Number: 112912
Done By: AS / Date: 11/29/2012 16:18

Method 4 Pre-Test Meter Console Calibration

Run No.	Calibration Meter Correction Factor (Yc)	Barometric Press. (Pb) (in.Hg)	Delta H (in w.g.)	Meter Box Volume (Vd) (cu.ft.)	Average Meter Box Temperature (Tm) (F)	Standard Meter Volume (Vc) (cu.ft.)	Standard Meter Temperature (Tc) (F)	Time (min.)	Gamma (Y)	Tolerance (plus or minus 0.02)	Delta H@	Tolerance (plus or minus 0.2)
1	0.9977	28.80	1.000	6.306	67.33	6.258	62.00	12	0.9977	0.003578	2.101	-0.055
2	0.9977	28.80	2.000	8.750	69.67	8.632	63.00	12	0.9917	-0.002369	2.207	0.051
3	0.9977	28.80	3.000	10.804	71.00	10.671	63.00	12	0.9929	-0.001210	2.161	0.005
										PASS		PASS
							Average		0.9941	PASS	2.156	

Pump Number T-PMP- 006

Meter Box Number T-MTB- 006

Reference Meter Number T-DGM- 006

Add Values to 30 Day Calibration History
Add Values to Dry Gas Meter Calibration History
Tag Meter Box

Meter Box Pre-Test Leak Check

- ☑ Remove the front panel from the meter box
- ☑ Disconnect the fan
- ☑ Hook up the proper pump to the meter box
- ☑ Close both the fine and coarse adjustment valves
- ☑ Connect the DH hoses on the front of the meter box
- ☑ Remove the copper elbow from stainless tube at the exit side of gas meter
- ☑ Stopper the stainless tube with a rubber stopper
- ☑ Disconnect the DH static line from the orifice (bottom)
- ☑ Plug in leak check tube into the static side of the orifice
- ☑ Blowing into the leak check tube, pressurize the system to 5-7 inches and clamp off
- ☑ Hold for one minute
- ☑ No leakage should occur. If leak is present, it must be corrected
- ☑ Affix (w/ electrical tape) the copper elbow onto the stainless tube at the exit side of gas meter
- ☑ Reassemble meter box
- ☑ Plug in capped swagelok stem at sample inlet
- ☑ Start pump, bringing system vacuum to at least 15 in. Hg
- ☑ Note DGM reading, start timer
- ☑ Observe DGM for one minute
- ☑ No leakage should occur. If leak is present, it must be corrected
- ☑ Check oil wick position (should be 1/4" above the black O-ring)
- ☑ Check pump oil level (should be at fill line)

Meter Box Number MTB- 015

Pump Number PMP- 015

Method 4 Pre-Test Meter Calculation Orifice Calibration Data

Meter Box I.D:	T - MTB - 015
Meter Box Serial Number:	412012
Standard Meter I.D:	T - DGM - 006
Temp Sensor I.D:	T - DGM 006
Barometer I.D:	T DPG- 006
Meter Box Level?	☑

Standard Meter

Calibrated By:	Apex Instruments Inc.
Calibration Date:	February 16, 2012
Gamma:	0.9977
Serial Number:	1512377

REMOVE CAPS FROM STANDARD METER

Run 1

Pressures

ΔH:	1.00	in.H_2O
Meter Box Vac:	5.0	in.Hg
P Bar:	28.90	in.Hg

Meter Readings

	Time	Std Meter	Meter Box
Begin	0.0	378.075	382.549
End	12.0	384.185	388.798
Net	12.0	6.110	6.249

(>5.0 dcf)

Temperatures

Time (min)	Std Meter In	Std Meter Out	Meter Box In	Meter Box Out
4	61.0	60.0		66.0
8	61.0	60.0		66.0
12	61.0	60.0		67.0
Avg.	60.50		66.33	

Run 2

Pressures

ΔH:	2.00	in.H_2O
Meter Box Vac:	5.0	in.Hg
P Bar:	28.90	in.Hg

Meter Readings

	Time	Std Meter	Meter Box
Begin	0.0	385.453	390.094
End	12.0	393.863	398.714
Net	12.0	8.410	8.620

(>5.0 dcf)

Temperatures

Time (min)	Std Meter In	Std Meter Out	Meter Box In	Meter Box Out
4	61.0	61.0		68.0
8	61.0	61.0		69.0
12	61.0	61.0		69.0
Avg.	61.00		68.67	

Run 3

Pressures

ΔH:	3.00	in.H_2O
Meter Box Vac:	5.0	in.Hg
P Bar:	28.90	in.Hg

Meter Readings

	Time	Std Meter	Meter Box
Begin	0.0	395.021	399.911
End	12.0	405.440	410.596
Net	12.0	10.419	10.685

(>5.0 dcf)

Temperatures

Time (min)	Std Meter In	Std Meter Out	Meter Box In	Meter Box Out
4	61.0	61.0		70.0
8	61.0	61.0		71.0
12	61.0	61.0		72.0
Avg.	61.00		71.00	

ΔH:	$\Delta H_@$	γ
1	2.188	0.9839
2	2.304	0.9827
3	2.242	0.9840
AVG.	2.244	0.9836

* Adjust and recalculate if γ does not equal 1.00 ± 0.02

Method 4 Pre-Test Meter Console Calibration

Run No.	Calibration Meter Correction Factor (Yc)	Barometric Press. (Pb) (in.Hg)	Delta H (in w.g.)	Meter Box Volume (Vd) (cu.ft.)	Average Meter Box Temperature (Tm) (F)	Standard Meter Volume (Vc) (cu.ft.)	Standard Meter Temperature (Tc) (F)	Time (min.)	Gamma (Y)	Tolerance (plus or minus 0.02)	Delta H@	Tolerance (plus or minus 0.2)
1	0.9977	28.90	1.000	6.249	66.33	6.110	60.50	12	0.9839	0.000377	2.188	-0.057
2	0.9977	28.90	2.000	8.620	68.67	8.410	61.00	12	0.9827	-0.000842	2.304	0.059
3	0.9977	28.90	3.000	10.685	71.00	10.419	61.00	12	0.9840	0.000465	2.242	-0.003
										PASS		PASS
							Average		0.9836	PASS	2.244	

Pump Number T-PMP- 015

Meter Box Number T-MTB- 015

Reference Meter Number T-DGM- 006

Add Values to 30 Day Calibration History
Add Values to Dry Gas Meter Calibration History
Tag Meter Box

ALT-009 Post-Test Leak Check

NOTE: Do not perform leak check if meter failed ALT-009 requirements.

- ☑ Remove the front panel from the meter box
- ☑ Disconnect the fan
- ☑ Hook up the proper pump to the meter box
- ☑ Close both the fine and coarse adjustment valves
- ☑ Connect the DH hoses on the front of the meter box
- ☑ Remove the copper elbow from stainless tube at the exit side of gas meter
- ☑ Stopper the stainless tube with a rubber stopper
- ☑ Disconnect the DH static line from the orifice (bottom)
- ☑ Plug in leak check tube into the static side of the orifice
- ☑ Blowing into the leak check tube, pressurize the system to 5-7 inches and clamp off
- ☑ Hold for one minute
- ☑ No leakage should occur.
- ☑ Affix (w/ electrical tape) the copper elbow onto the stainless tube at the exit side of gas meter
- ☑ Reassemble meter box

Meter Box Number MTB- 006

Pump Number PMP- 006

Job Number: 130112A

Done By / Date: PB /02/11/2013

ALT-009 Post-Test Leak Check

NOTE: Do not perform leak check if meter failed ALT-009 requirements.

- ☑ Remove the front panel from the meter box
- ☑ Disconnect the fan
- ☑ Hook up the proper pump to the meter box
- ☑ Close both the fine and coarse adjustment valves
- ☑ Connect the DH hoses on the front of the meter box
- ☑ Remove the copper elbow from stainless tube at the exit side of gas meter
- ☑ Stopper the stainless tube with a rubber stopper
- ☑ Disconnect the DH static line from the orifice (bottom)
- ☑ Plug in leak check tube into the static side of the orifice
- ☑ Blowing into the leak check tube, pressurize the system to 5-7 inches and clamp off
- ☑ Hold for one minute
- ☑ No leakage should occur.
- ☑ Affix (w/ electrical tape) the copper elbow onto the stainless tube at the exit side of gas meter
- ☑ Reassemble meter box

Meter Box Number MTB- 015

Pump Number PMP- 015

Job Number: 130112B

Done By / Date: WD /02/18/2013

Method 4 DGM Calibration History

Effective Date: 7/16/12
Rev No. 0
Issued by: Quality Manager

Type	Date	Standard Meter Serial #	Meter Box #	Delta H	Delta H@	Delta H	Delta H@	Delta H	Delta H@	Gamma	Average Delta H@	By
PRE	7/13/2012	1512377	T-MTB- 012	1.00	1.856	2.00	1.890	3.00	1.882	0.9876	1.876	JL
PRE	7/13/2012	1512377	T-MTB- 009	1.00	1.930	2.00	1.933	3.00	1.896	1.0048	1.920	JL
PRE	7/26/2012	1512377	T-MTB- 014	1.00	1.548	2.00	1.640	3.00	1.669	0.9950	1.619	PB
PRE	7/26/2012	1512377	T-MTB- 010	1.00	1.959	2.00	2.028	3.00	1.980	1.0127	1.989	PB
PRE	8/8/2012	1512377	T-MTB- 006	1.00	2.133	2.00	2.149	3.00	2.124	0.9897	2.135	PB
PRE	8/10/2012	1512377	T-MTB- 019	1.00	1.914	2.00	1.838	3.00	1.857	1.0057	1.870	PB
PRE	8/10/2012	1512377	T-MTB- 018	1.00	1.929	2.00	1.909	3.00	1.878	1.0054	1.905	PB
PRE	8/10/2012	1512377	T-MTB- 017	1.00	1.883	2.00	1.908	3.00	1.856	0.9956	1.882	PB
PRE	8/24/2012	1512377	T-MTB- 003	1.00	1.756	2.00	1.818	3.00	1.796	0.9942	1.790	PB
PRE	9/17/2012	1512377	T-MTB- 012	1.00	1.880	2.00	1.945	3.00	1.915	0.9811	1.913	PB
POST	9/17/2012	1512377	T-MTB- 012	1.50	1.942	1.50	1.940	3.00	1.927	0.9911	1.936	PB
PRE	9/18/2012	1512377	T-MTB- 009	1.00	1.903	2.00	1.897	3.00	1.852	0.9858	1.884	PB
PRE	9/19/2012	1512377	T-MTB- 014	1.00	1.805	2.00	1.919	3.00	1.919	0.9821	1.881	PB
PRE	9/24/2012	1512377	T-MTB- 015	1.00	2.135	2.00	2.222	3.00	2.173	0.9967	2.176	PB
PRE	9/28/2012	1512377	T-MTB- 010	1.00	1.999	2.00	2.053	3.00	2.006	0.9956	2.019	PB
PRE	10/8/2012	1512377	T-MTB- 006	1.00	2.077	2.00	2.166	3.00	2.171	0.9967	2.138	PB
PRE	10/24/2012	1512377	T-MTB- 003	1.00	1.804	2.00	1.858	3.00	1.839	1.0000	1.834	RS
POST	10/25/2012	1512377	T-MTB- 009	1.83	1.916	1.83	1.857	1.83	1.896	0.9868	1.890	PB
PRE	10/26/2012	1512377	T-MTB- 018	1.00	1.939	2.00	1.879	3.00	1.880	0.9973	1.899	PB
PRE	10/26/2012	1512377	T-MTB- 019	1.00	1.897	2.00	1.862	3.00	1.917	1.0082	1.892	PB
POST	11/2/2012	1512377	T-MTB- 012	1.64	1.970	1.64	1.959	1.64	1.961	0.9939	1.963	PB
POST	11/8/2012	1512377	T-MTB- 009	1.41	1.617	1.41	1.899	1.41	1.884	0.9842	1.800	PB
PRE	11/16/2012	1512377	T-MTB- 012	1.00	1.922	2.00	1.970	3.00	1.962	0.9848	1.951	PB
PRE	11/16/2012	1512377	T-MTB- 014	1.00	1.704	2.00	1.812	3.00	1.830	0.9837	1.782	PB
PRE	11/29/2012	1512377	T-MTB- 006	1.00	2.101	2.00	2.207	3.00	2.161	0.9941	2.156	AS
PRE	11/29/2012	1512377	T-MTB- 015	1.00	2.188	2.00	2.304	3.00	2.242	0.9836	2.244	AS
POST	11/23/2012	1512377	T-MTB- 018	1.14	1.928	1.14	1.948	1.14	2.021	0.9973	1.966	PB
POST	11/23/2012	1512377	T-MTB- 014	1.00	1.794	1.00	1.775	1.00	1.768	0.9837	1.779	JL
POST	12/7/2012	1512377	T-MTB- 012	1.50	1.970	1.50	1.934	1.50	1.933	0.9917	1.946	JL
POST	12/7/2012	1512377	T-MTB- 018	1.14	1.928	1.14	1.948	1.14	2.021	0.9973	1.966	JL
PRE	12/7/2012	1512377	T-MTB- 017	1.00	1.932	2.00	1.881	3.00	1.907	0.9840	1.906	JL
POST	12/14/2012	1512377	T-MTB- 015	1.01	2.186	1.01	2.160	1.01	2.183	0.9893	2.176	WD
PRE	12/26/2012	1512377	T-MTB- 003	1.00	1.766	2.00	1.858	3.00	1.830	0.9844	1.818	PB
PRE	12/26/2012	1512377	T-MTB- 019	1.00	1.922	2.00	1.885	3.00	1.872	0.9993	1.893	PB
PRE	12/28/2013	1512377	T-MTB- 018	1.00	2.005	2.00	1.960	3.00	1.911	0.9918	1.958	WD
POST	1/4/2013	1512377	T-MTB- 006	2.00	2.224	2.00	2.211	2.00	2.211	0.9872	2.215	PB
PRE	1/11/2013	1512377	T-MTB- 014	1.00	1.579	2.00	1.554	3.00	1.599	0.9880	1.577	WD
PRE	1/16/2013	1512377	T-MTB- 012	1.00	1.800	2.00	1.867	3.00	1.831	0.9857	1.833	PB
PRE	1/25/2013	1512377	T-MTB- 015	1.00	2.141	2.00	2.127	3.00	2.120	0.9818	2.129	PB
PRE	2/1/2013	1512377	T-MTB- 010	1.00	2.013	2.00	2.011	3.00	2.015	1.0023	2.013	JL
PRE	2/1/2013	1512377	T-MTB- 017	1.00	1.920	2.00	1.913	3.00	1.888	0.9835	1.907	JL
PRE	2/1/2013	1512377	T-MTB- 003	1.00	1.819	2.00	1.838	3.00	1.821	0.9904	1.826	JL
POST	2/11/2013	1512377	T-MTB- 012	1.06	1.868	1.06	1.875	1.06	1.854	1.0051	1.866	JL
POST	2/11/2013	1512377	T-MTB- 012	0.92	1.881	0.92	1.873	0.92	1.752	1.0095	1.835	JL

Digital Pressure Gauge Calibration History

Effective Date: 7/16/12
Rev No. 0
Issued by: Quality Manager

Date	Digital Pressure Gauge ID#		(mm Hg) Mercury Barometer	(mm Hg) DPG	(mm Hg) Difference	(<2mm Hg) PASS/FAIL	By whom	Adjusted?	(°F) Temp.
7/25/2012	T-DPG-	009	729	729	0	PASS	PB	NO	78.0
8/8/2012	T-DPG-	005	729	730	1	PASS	PB	NO	76.2
8/8/2012	T-DPG-	006	729	730	1	PASS	PB	NO	76.2
8/9/2012	T-DPG-	008	729	730	1	PASS	PB	NO	77.7
9/4/2012	T-DPG-	008	729	729	0	PASS	PB	NO	77.5
9/4/2012	T-DPG-	005	729	730	1	PASS	PB	NO	77.5
9/4/2012	T-DPG-	006	729	729	0	PASS	PB	NO	77.5
9/7/2012	T-DPG-	005	729	730	1	PASS	PB	NO	77.2
9/7/2012	T-DPG-	006	729	729	0	PASS	PB	NO	77.2
9/7/2012	T-DPG-	008	729	729	0	PASS	PB	NO	77.2
9/7/2012	T-DPG-	009	729	728	-1	PASS	PB	NO	77.2
9/14/2012	T-DPG-	005	734	734	0	PASS	PB	NO	75.3
9/14/2012	T-DPG-	006	734	734	0	PASS	PB	NO	75.3
9/18/2012	T-DPG-	009	721	722	1	PASS	PB	NO	71.5
9/24/2012	T-DPG-	005	734	734	0	PASS	PB	NO	67.0
9/24/2012	T-DPG-	006	734	735	1	PASS	PB	NO	67.0
9/24/2012	T-DPG-	009	734	735	1	PASS	PB	NO	67.0
9/28/2012	T-DPG-	005	734	733	-1	PASS	PB	NO	66.2
9/28/2012	T-DPG-	006	734	733	-1	PASS	PB	NO	66.2
9/28/2012	T-DPG-	008	734	735	1	PASS	PB	NO	66.2
9/28/2012	T-DPG-	009	734	733	-1	PASS	PB	NO	66.2
10/11/2012	T-DPG-	005	731	732	1	PASS	PB	NO	65.4
10/18/2012	T-DPG-	006	721	721	0	PASS	PB	NO	68.3
10/18/2012	T-DPG-	008	721	723	2	PASS	PB	NO	68.3
10/18/2012	T-DPG-	009	721	722	1	PASS	PB	NO	68.3
10/19/2012	T-DPG-	005	719	719	0	PASS	PB	NO	67.1
11/2/2012	T-DPG-	005	726	727	1	PASS	PB	NO	65.0
11/9/2012	T-DPG-	005	734	735	1	PASS	WD	NO	68.0
11/23/2012	T-DPG-	005	724	725	1	PASS	PB	NO	64.4
11/23/2012	T-DPG-	006	724	724	0	PASS	PB	NO	64.4
11/23/2012	T-DPG-	008	724	726	2	PASS	PB	NO	64.4
11/23/2012	T-DPG-	009	724	725	1	PASS	PB	NO	64.4
11/23/2012	T-DPG-	010	724	725	1	PASS	PB	NO	64.4
11/28/2012	T-DPG-	010	737	737	0	PASS	AS	NO	63.0
12/7/2012	T-DPG-	005	729	729	0	PASS	JL	NO	61.4
12/7/2012	T-DPG-	006	729	728	-1	PASS	JL	NO	61.4
12/7/2012	T-DPG-	010	729	730	1	PASS	JL	NO	61.4
12/7/2012	T-DPG-	009	726	727	1	PASS	JL	NO	64.8
12/21/2012	T-DPG-	009	716	716	0	PASS	WD	NO	62.0
12/28/2012	T-DPG-	010	734	733	-1	PASS	WD	NO	59.0
12/31/2012	T-DPG-	005	729	729	0	PASS	PB	NO	59.1
12/31/2012	T-DPG-	006	729	728	-1	PASS	PB	NO	59.1
1/4/2013	T-DPG-	006	732	731	-1	PASS	PB	NO	61.4
1/4/2013	T-DPG-	005	732	731	-0.55	PASS	PB	NO	61.4
1/4/2013	T-DPG-	010	732	733	1	PASS	PB	NO	61.4
1/4/2013	T-DPG-	008	732	733	1	PASS	PB	NO	61.4
1/4/2013	T-DPG-	009	732	732	0	PASS	PB	NO	61.4
1/11/2013	T-DPG-	010	727	727	0	PASS	WD	NO	63.0
1/11/2013	T-DPG-	005	728	727	-1	PASS	WD	NO	63.0
1/16/2013	T-DPG-	010	726.5	728	1.5	PASS	PB	NO	63.1
1/18/2013	T-DPG-	007	768	770	2	PASS	WD	NO	61.0
2/4/2013	T-DPG-	009	729	728	-1	PASS	JL	NO	60.0
2/5/2013	T-DPG-	005	725	726	1	PASS	JL	NO	62.6
2/11/2013	T-DPG-	009	722	721	-1	PASS	PB	NO	62.7

Air Compliance Testing, Inc.
D:\Testing\Calibration History\Ohio\4A - OH - Electronic Calibration History
(4A - OH - Electronic Calibration History-DPG CaliHist) 2/15/2013

2 of 2

Bios

Driving a Higher Standard in Flow Measurement™

Met Lab Base Test Certificate

NVLAP®
NVLAP Lab Code 200661

Model ML-500-B
Serial No. 122543
Calibration Date February 23, 2012
Report No. 11695
Sold to:
V-F Controls
8619 Tyler Blvd.
Mentor, OH 44060

PO No. 11884

All calibrations are performed in accordance with ISO 17025 at Bios International Corporation, 10 Park Place, Butler, NJ, 07405, 800-663-4977, an ISO 17025:2005 accredited laboratory through NVLAP. This report shall not be reproduced except in full without the written approval of the laboratory. Results only relate to the items calibrated. This report must not be used to claim product certification, approval, or endorsement by NVLAP, NIST, or any agency of the Federal Government.

The Met Lab ML-500 is a true primary flow standard. A separate calibration certificate is supplied with the flow measuring cell(s). The Clock Period of the timing crystal contained in the ML-500 base unit described above has been tested against NIST-traceable standards to verify its accuracy. Calibration certificates for the standard(s) used in this calibration are available upon request.

As Shipped Clock Period Data. Clock Period tested in accordance with procedure number PR12-03.

DUT Clock Period: 100.494 ms	Target Clock Period: 100.500 ms	Allowable Deviation: ± 0.05 ms	In Tolerance

Expanded uncertainty: Clock Period - ±29 ppm. Two times coverage.

Laboratory Environment:

Temperature Ambient: 22.9 °C Pressure Ambient: 755.60 mmHg

By: Harvey F. Padden

Harvey Padden, President / Chief Metrologist
Bios International Corporation

CAL02-10 Rev J03

Bios International • 10 Park Place, Butler, NJ 07405 • 800.663.4977 • www.biosint.com

Bios

Driving a Higher Standard in Flow Measurement℠

Met Lab Calibration Certificate

NVLAP®
NVLAP Lab Code 200661

Model	ML-500-44
Serial No.	123449
Calibration Date	February 23, 2012
Report No.	11696

Sold To:
V-F Controls
8619 Tyler Blvd.
Mentor, OH 44060

PO No. 11884

All calibrations are performed in accordance with ISO 17025 at Bios International Corporation, 10 Park Place, Butler, NJ, 07405, 800-663-4977, an ISO 17025:2005 – accredited laboratory through NVLAP. This report shall not be reproduced except in full without the written approval of the laboratory. Results only relate to the items calibrated. This report must not be used to claim product certification, approval, or endorsement by NVLAP, NIST, or any agency of the Federal Government.

The Met Lab ML-500 is a true primary volumetric flow standard rated with an expanded uncertainty of ±0.40% with a coverage factor of k=2. The flow cell described above is dimensionally calibrated against NIST-traceable standards. The temperature and pressure sensors are also calibrated against NIST-traceable standards. Calibration certificates for the standards used in this calibration are available upon request. The diameter, length, temperature, and pressure are tested in accordance with procedure numbers PR12-01, PR12-02, PR12-04 and PR12-05. Temperature and pressure corrections are then applied to the volumetric flow readings to obtain standardized flow readings.

A flow verification test is performed on all ML-500 flow cells per procedure number PR12-17 using nitrogen or filtered laboratory air to ensure proper operation in typical laboratory conditions.

Expanded uncertainty:	Temperature	±0.03%
	Absolute Pressure	±0.013%
	Length (note 1)	±0.014%
	Diameter (note 1)	±0.007%

All at two times coverage factor of k=2.
Note 1 – Length and Diameter uncertainty are accredited measurements only as part of Bios's flow measurement accreditation.

Laboratory Environment:

Temperature Ambient: 22.4 °C Pressure Ambient: 755.60 mmHg

By: Harvey F. Padden
Harvey Padden, President / Chief Metrologist
Bios International Corporation

Page 1 of 2 CAL02-11 Rev G04

Calibration Certificate

Report Number 11696

Measurements for: ML-500-44	SERIAL #: 123449

Date	February 23, 2012

Calibrated Volume (cc) :	59.0461

As Shipped Flow Verification (Functionality Test)						
Nominal Flow sccm [1]	Ref. Std. SN 103521	Instrument Under Test	Deviation %	Allowable Deviation [2]	E_N [3]	Tolerance
50000	50222.00	50177.00	-0.09%	0.44%	0.20	In Tolerance
5000	5007.61	5005.00	-0.05%	0.44%	0.12	In Tolerance
500	503.69	504.04	0.07%	0.44%	0.16	In Tolerance

As Shipped Temperature and Pressure Calibration						
	Reference Standard	Instrument Under Test	Deviation	Allowable Deviation	E_N [3]	Tolerance
Bath Set Temp. 16.5 (^{0}C)	16.60	16.60	0.00	0.30	0.00	In Tolerance
Bath Set Temp. 22.5 (^{0}C)	22.57	22.60	-0.03	0.30	0.10	In Tolerance
Bath Set Temp. 28.5 (^{0}C)	28.51	28.50	0.01	0.30	0.03	In Tolerance
Pres Zero (mm Hg)	0.36	0.40	-0.04	1.00	0.04	In Tolerance
Pres Amb (mm Hg)	755.63	755.60	0.03	1.00	0.03	In Tolerance

Flow/ Temp/ Pressure Calibration Technician	Jacquella Shives
Dimensional Calibration Technician	Alfred Habazaj

1. The flow rate at a standard temperature of 0^{0}C and pressure of 760 mmHg

2. Allowable Deviation for the Flow Verification refers to the RSS of total estimated uncertainty for the Instrument Under Test, the Reference Standard and the test uncertainty.

3. En values ≤ 1 indicate that the two flow measurements agree with each other within uncertainty expectations

Bios

Driving a Higher Standard in Flow Measurement™

Met Lab Calibration Certificate

NVLAP®
NVLAP Lab Code 200661

Model ML-500-10
Serial No. 123433
Calibration Date February 23, 2012
Report No. 11697
Sold To:
V-F Controls
8619 Tyler Blvd.
Mentor, OH 44060

PO No. 11884

All calibrations are performed in accordance with ISO 17025 at Bios International Corporation, 10 Park Place, Butler, NJ, 07405, 800-663-4977, an ISO 17025:2005 – accredited laboratory through NVLAP. This report shall not be reproduced except in full without the written approval of the laboratory. Results only relate to the items calibrated. This report must not be used to claim product certification, approval, or endorsement by NVLAP, NIST, or any agency of the Federal Government.

The Met Lab ML-500 is a true primary volumetric flow standard rated with an expanded uncertainty of ±0.40% with a coverage factor of k=2. The flow cell described above is dimensionally calibrated against NIST-traceable standards. The temperature and pressure sensors are also calibrated against NIST-traceable standards. Calibration certificates for the standards used in this calibration are available upon request. The diameter, length, temperature, and pressure are tested in accordance with procedure numbers PR12-01, PR12-02, PR12-04 and PR12-05. Temperature and pressure corrections are then applied to the volumetric flow readings to obtain standardized flow readings.

A flow verification test is performed on all ML-500 flow cells per procedure number PR12-17 using nitrogen or filtered laboratory air to ensure proper operation in typical laboratory conditions.

Expanded uncertainty:	Temperature	±0.03%
	Absolute Pressure	±0.013%
	Length (note 1)	±0.014%
	Diameter (note 1)	±0.007%

All at two times coverage factor of k=2.
Note 1 – Length and Diameter uncertainty are accredited measurements only as part of Bios's flow measurement accreditation.

Laboratory Environment:

Temperature Ambient: 22.4 °C Pressure Ambient: 755.60 mmHg

By: Harvey F. Padden
Harvey Padden, President / Chief Metrologist
Bios International Corporation

Bios International • 10 Park Place, Butler, NJ 07405 • 800.663.4977 • www.biosint.com

Calibration Certificate

Report Number 11697

Measurements for: ML-500-10	SERIAL #: 123433

Date	February 23, 2012

Calibrated Volume (cc) :	4.1272

As Shipped Flow Verification (Functionality Test)

Nominal Flow sccm [1]	Ref. Std. SN 103743	Instrument Under Test	Deviation %	Allowable Deviation [2]	E_N [3]	Tolerance
500	500.94	501.87	0.19%	0.44%	0.42	In Tolerance
90	90.25	90.41	0.18%	0.44%	0.40	In Tolerance
15	15.07	15.10	0.21%	0.44%	0.48	In Tolerance

1. The flow rate at a standard temperature of 0^0C and pressure of 760 mmHg

2. Allowable Deviation for the Flow Verification refers to the RSS of total estimated uncertainty for the Instrument Under Test, the Reference Standard and the test uncertainty.

3. En values ≤ 1 indicate that the two flow measurements agree with each other within uncertainty expectations

As Shipped Temperature and Pressure Calibration

	Reference Standard	Instrument Under Test	Deviation	Allowable Deviation	E_N [3]	Tolerance
Bath Set Temp. 16.5 (^{0}C)	16.61	16.60	0.01	0.30	0.03	In Tolerance
Bath Set Temp. 22.5 (^{0}C)	22.57	22.60	-0.03	0.30	0.10	In Tolerance
Bath Set Temp. 28.5 (^{0}C)	28.52	28.60	-0.08	0.30	0.27	In Tolerance
Pres Zero (mm Hg)	0.37	0.40	-0.03	1.00	0.03	In Tolerance
Pres Amb (mm Hg)	755.66	755.70	-0.04	1.00	0.04	In Tolerance

Flow/ Temp/ Pressure Calibration Technician	Jacquella Shives
Dimensional Calibration Technician	Alfred Habazaj

APEX INSTRUMENTS REFERENCE METER CALIBRATION
USING WET-TEST METER #11AE6
15-POINT ENGLISH UNITS

Calibration Meter Information	
Wet Test Meter Model #	AL-20
Wet Test Meter Serial #	11AE6
Wat Test Meter Gamma	0.9990

Calibration Conditions			
Date	Time	16-Apr-09	2:15
Barometric Pressure		29.9	in Hg
Calibration Technician		EW	
DGM Serial Number		S-120-1512377	

Factors/Conversions		
Std Temp	528	°R
Std Press	29.92	in Hg
K_1	17.647	°R/in Hg

Calibration Data												Results		
Run Time	Dry Gas Meter						Calibration Meter					Dry Gas Meter		
												Calibration Factor		Flowrate
Elapsed	Mater Pressure	Volume Initial	Volume Final	Sample Volume	Outlet Temp Initial	Outlet Temp Final	Volume Initial	Volume Final	Sample Volume	Outlet Temp Initial	Outlet Temp Final	Value	Variation	Std & Corr
(θ)	(P_m)	(V_{m_i})	(V_{m_f})	(V_m)	(t_{m_i})	(t_{m_f})	(V_{w_i})	(V_{w_f})	(V_w)	(t_{w_i})	(t_{w_f})	(Y)	(ΔY)	($Q_{std\ corr}$)
min	in H_2O	cubic feet	cubic feet	cubic feet	°F	°F	cubic feet	cubic feet	cubic feet	°F	°F			cfm
5.00	-5.5	474.747	480.983	6.236	84.2	84.2	868.400	874.380	5.980	73	73	0.9925	-0.00137	1.182
5.00	-5.5	480.983	487.223	6.240	84.2	86.0	874.380	880.360	5.980	73	73	0.9935	-0.00036	1.182
5.00	-5.5	487.223	493.460	6.237	86.0	87.8	880.360	886.330	5.970	73	73	0.9956	0.00173	1.180
										Passed Calibration Factor Var		0.9939	Averages	1.181
6.00	-4.2	511.684	517.728	6.044	86.0	86.0	904.035	909.850	5.815	73	73	0.9958	-0.00081	0.958
6.00	-4.2	517.728	523.804	6.076	86.0	87.8	909.850	915.695	5.845	73	73	0.9969	0.00023	0.962
6.00	-4.2	523.804	529.885	6.081	87.8	87.8	915.695	921.540	5.845	73	73	0.9972	0.00058	0.962
										Passed Calibration Factor Var		0.9966	Averages	0.961
7.00	-3.3	529.885	535.485	5.600	87.8	89.6	921.540	926.930	5.390	73	73	0.9980	-0.00016	0.760
7.00	-3.3	535.485	541.071	5.586	89.6	89.6	926.930	932.300	5.370	73	73	0.9984	0.00026	0.757
7.00	-3.3	541.071	546.659	5.588	89.6	89.6	932.300	937.670	5.370	73	73	0.9980	-0.00010	0.757
										Passed Calibration Factor Var		0.9981	Averages	0.758
10.00	-2.5	546.659	552.300	5.641	89.6	89.6	937.670	943.120	5.450	73	74	1.0009	0.00176	0.538
10.00	-2.5	552.300	557.928	5.628	89.6	89.6	943.120	948.545	5.425	74	74	0.9982	-0.00100	0.535
10.00	-2.5	557.928	563.565	5.637	89.6	89.6	948.545	953.980	5.435	74	74	0.9984	-0.00076	0.536
										Passed Calibration Factor Var		0.9992	Averages	0.536
15.00	-2.3	493.460	499.555	6.095	86.0	86.0	886.330	892.255	5.925	73	73	1.0014	0.00061	0.390
15.00	-2.3	499.555	505.615	6.060	86.0	86.0	892.255	898.140	5.885	73	73	1.0004	-0.00041	0.388
15.00	-2.3	505.615	511.684	6.069	86.0	86.0	898.140	904.035	5.895	73	73	1.0006	-0.00020	0.388
										Passed Calibration Factor Var		1.0008	Averages	0.389
											Overall Average Y	0.9977		

Note: For Calibration Factor Y, the ratio of the reading of the calibration meter to the dry gas meter, acceptable tolerance of individual values from the average is +-0.02.

I certify that the above Dry Gas Meter was calibrated in accordance with USEPA Methods, CFR 40 Part 60, using the Precision Wet Test Meter # 11AE6, which in turn was calibrated using the American Bell Prover # 3785, certificate # F107, which is traceable to the National Bureau of Standards (N.I.S.T.).

Signature Eric Weber

Date 4/16/09

APEX INSTRUMENTS REFERENCE METER VERIFICATION
USING WET-TEST METER #11AE6
2-POINT ENGLISH UNITS

Calibration Meter Information	
WTM Model #	AL20
WTM Serial #	11AE6
WTM Gamma	0.9999
Original 15Pt Gamma	**0.9977**

Calibration Conditions		
Date / Time	16-Feb-12	2:15
Barometric Pressure	29.70	in Hg
Calibration Tech	EW	
DGM Serial Number	S-120-1512377	

Factors/Conversions		
Std Temp	528	°R
Std Press	29.92	in Hg
K_1	17.647	°R/in Hg

Calibration Data													Results		
Run Time	Metering Console						Calibration Meter						Dry Gas Meter		
													Calibration Factor		Flowrate
Elapsed	DGM Input Pressure	Volume Initial	Volume Final	Volume Sample	Outlet Temp Initial	Outlet Temp Final	Volume Initial	Volume Final	Volume Sample	Outlet Temp Initial	Outlet Temp Final		Previous	Current	Std & Corr
(θ)	(P_m)	(V_{mi})	(V_{mf})	(V_m)	(t_{mi})	(t_{mf})	(Vw_i)	(Vw_f)	(V_m)	(t_{wi})	(t_{wf})		(Y)	(Y)	($Q_{m(std)(corr)}$)
min	in H_2O	cubic feet	cubic feet	cubic feet	°F	°F	cubic feet	cubic feet	cubic feet	°F	°F				cfm
6:00	-3.7	718.798	724.736	5.938	77.0	77.0	119.315	125.215	5.900	73	73		0.9966	1.0103	0.967
												Variation	1.38%	must be less than 1.5%	
10.00	-2.2	713.185	718.798	5.613	77.0	77.0	113.720	119.315	5.595	73	73		0.9992	1.0098	0.550
												Variation	1.06%	must be less than 1.5%	

I certify that the above Dry Gas Meter was calibrated in accordance with USEPA Methods, CFR 40 Part 60, App A, Method 5, Paragraph 7.1.2.2, using the Precision Wet Test Meter # 11AE6, which in turn was calibrated using the American Bell Prover.# 3785, certificate # F107, which is traceable to the National Bureau of Standards (N.I.S.T.).

Signature: Eric Weber Date: 2/16/12

MONITORING INSTRUMENTS

Industrial Environmental Monitoring Instruments, Inc.

7410 Worthington-Galena Road
Worthington, Ohio 43085
Phone: (614) 436-4933
Fax: (614) 436-9144

Website: www.ierents.com

Temperature Calibrator/Thermometer Certificate

Model: Omega CL23A
Serial #: 1-229854

Date: 4/6/2012
Technition Sam Shults

Thermometer Calibration

Type K, J & T multiple points over Full Scale Results: +/- .7 F
Unit Accuracy: +/- 1.0 F

Calibrator Mode Calibration

Type K, J & T multiple points over Full Scale Results: +/- .4 F
Unit Accuracy: +/- 1.0 F

Thermocouple Test

Lab Std.	Actual		Lab Std.	Actual
32.0 F	31.9 F	*Type K*	250.0 F	250.6 F
32.0 F	31.7 F	*Type J*	250.0 F	249.7 F

NIST Reference Standards

Agilent 34401A Multimeter sn. MY41002352 Calibration Due 12/1/2013
Analogic DigiCalc II Calibration Due: 14/22/2012
Hart 9103 Temperature Well Calibration Due: 4/27/2012

Calibration Standards are NIST Traceable
Instrument must be calibrated and operated according to manufacturers specifications

Industrial Environmental Monitoring Instruments, Inc.

7410 Worthington-Galena Road
Worthington, Ohio 43085
Phone: (614) 436-4933
Fax: (614) 436-9144

Website: www.ierents.com

Temperature Calibrator/Thermometer Certificate

Model: Omega CL3512A
Serial #: 11000091

Date: 7/17/2012
Technition Sam Shults

Thermometer Calibration

Type K, J, E & T multiple points over Full Scale Results: +/- 1.0 F
Unit Accuracy: +/- 1.8 F

Calibrator Mode Calibration

Type K, J,E & T multiple points over Full Scale Results: +/- 1.0 F
Unit Accuracy: +/- 1.8 F

NIST Reference Standards
Agilent 34401A Multimeter sn. MY41002352 Calibration Due 12/1/2013
Analogic DigiCalc II Calibration Due: 17/13/2013
Hart 9103 Temperature Well Calibration Due: 5/16/2013

Calibration Standards are NIST Traceable
Instrument must be calibrated and operated according to manufacturers specifications

Industrial Environmental Monitoring Instruments, Inc.

7410 Worthington-Galena Road
Worthington, Ohio 43085
Phone: (614) 436-4933
Fax: (614) 436-9144

Website: www.ierents.com

Temperature Calibrator/Thermometer Certificate

Model: Omega CL3512A
Serial #: 11000622

Date: 9/14/2012
Technition Sam Shults

Thermometer Calibration

Type K, J & T multiple points over Full Scale Results: +/- .3 F
Unit Accuracy: +/- 2.0 F

Calibrator Mode Calibration

Type K, J & T multiple points over Full Scale Results: +/- 1.0 F
Unit Accuracy: +/- 3.0 F

NIST Reference Standards
Agilent 34401A Multimeter sn. MY41002352 Calibration Due 12/1/2013
Analogic DigiCalc II Calibration Due: 7/13/2013

Calibration Standards are NIST Traceable
Instrument must be calibrated and operated according to manufacturers specifications

Certificate of Calibration

OCS technologies, inc.
1300 East Granger Road: Brooklyn Hts. OH 44131
(800) 362-0364 www.ocscal.com

LABORATORY ACCREDITATION BUREAU ACCREDITED
CERT# L1152-1 Calibration

CUSTOMER:
AIR COMPLIANCE TESTING, INC.
10060 BRECKSVILLE ROAD
BRECKSVILLE, OH 44141

ASSET NUMBER:	B26978	**PERFORMED ON:**	15 Feb 2012
OWNER ASSET #:	BAL-005	**DATE DUE:**	10 Feb 2013
UNIT UNDER TEST:	A&D EK-1200G BALANCE, 1200G X 0.1G	TEST RESULT:	PASS
		DATA TYPE:	AS-LEFT
		TEMP / HUMIDITY:	70.0 °F/ 23 %RH
SERIAL NUMBER:	J8084811	SERVICE SITE:	OCS
LOCATION:		CALIBRATED BY:	JH
PROCEDURE NAME:	NIST HANDBOOK 44,g,2 STDS	APPROVED BY:	

Unless Otherwise Noted: OCS Technologies, Inc. certifies that the above listed instrument has been tested with a 2:1 Test Uncertainty Ratio (TUR) using standards that are traceable to the International System of Units (SI) through the National Institute of Standards & Technology (NIST), or through NIST accepted intrinsic standards of measurement, or through another National Metrology Institute (NMI). The item tested meets or exceeds all specifications as stated in the referenced procedure solely at the time of calibration. Measurement uncertainty if reported has been calculated at k=2 providing a 95% confidence interval and has been excluded from the Pass/Fail Result above. OCS is ISO/IEC 17025 accredited by the Laboratory Accreditation Bureau. Calibration performed in accordance with ISO 17025:2005 and ISO 10012:2003. This report may only be reproduced in full. Temperature and Humidity for on-site work may be reported above as the mean of high and low values recorded for all items on the day of service. If the data type is FOUND-LEFT then the As Found and As Left data are the same.

Remarks: . UNIT LOCKED UP ON "LB" ON ARRIVAL. RE-CALIBRATED UNIT. NOTE: CASE THAT SCALE IS IN IS PUTTING TO MUCH PRESSURE ON BALANCE. THE BASE PADDING NEEDS TO BE CUT AWAY TO ALLOW MORE CLEARANCE FOR SCALE . CLOSING THE LID TIGHTLY WILL CAUSE DAMAGE TO SCALE !!!!

Standards Used

Asset	Traceable Through	Description	Cal Date	Cal Due Date
1XUC	CERT#:188047	RICE LAKE 2MG-5KG CLASS I KIT (12222.220G TOTAL)	01 Jun 2011	01 Jun 2012

Test Results

Test Description	Range	True Value	Test Result	Lower Limit	Upper Limit		%TOL	Status
TESTED IN ACCORDANCE WITH NIST Handbook 44-2011 Section 2.20 Paragraphs N1.1, N1.3, N1.11, N.2,N.3.2 T.N.5 & Tables 4, T.11, 7A as Applicable.								
REPEATABILITY VERIFICATION:								
Result of Operator Evaluation								Pass
SHIFT TEST VERIFICATION:								
Result of Operator Evaluation								Pass
LINEARITY:								
1.00 g		1.00	1.0	0.9	1.1	g	0	Pass
10.00 g		10.00	10.0	9.9	10.1	g	0	Pass
100.00 g		100.00	100.0	99.8	100.2	g	0	Pass
500.00 g		500.00	500.0	499.5	500.5	g	0	Pass
1000.00 g		1000.00	1000.0	999.5	1000.5	g	0	Pass

Uncertainty of Measurement is 0.13 G

Certificate # 191146488FD18647850B747B917A0D56
Date Printed: 20 Feb 2012 Form No.: 133 Rev 09/2011 Page 1 of 1

Certificate of Calibration

OCS technologies, inc.
1300 East Granger Road: Brooklyn Hts. OH 44131
00) 362-0364 www.ocscal.com

LABORATORY ACCREDITATION BUREAU ACCREDITED
CERT# L1152-1 Calibration

CUSTOMER:
AIR COMPLIANCE TESTING, INC.
10060 BRECKSVILLE ROAD
BRECKSVILLE, OH 44141

ASSET NUMBER:	B26979	**PERFORMED ON:**	**10 Feb 2012**
OWNER ASSET #:	BAL-007	**DATE DUE:**	**10 Feb 2013**
UNIT UNDER TEST:	A&D EK-1200I BALANCE, 1200G X 0.1G	TEST RESULT:	PASS
		DATA TYPE:	FOUND-LEFT
		TEMP / HUMIDITY:	65.0 °F/ 25 %RH
SERIAL NUMBER:	EP1861726	SERVICE SITE:	ON-SITE
LOCATION:		CALIBRATED BY:	ANGELO COLOMBO
PROCEDURE NAME:	NIST HANDBOOK 44,g,2 STDS	APPROVED BY:	

Unless Otherwise Noted: OCS Technologies, Inc. certifies that the above listed instrument has been tested with a 2:1 Test Uncertainty Ratio (TUR) using standards that are traceable to the International System of Units (SI) through the National Institute of Standards & Technology (NIST), or through NIST accepted intrinsic standards of measurement, or through another National Metrology Institute (NMI). The item tested meets or exceeds all specifications as stated in the referenced procedure solely at the time of calibration. Measurement uncertainty if reported has been calculated at k=2 providing a 95% confidence interval and has been excluded from the Pass/Fail Result above. OCS is ISO/IEC 17025 accredited by the Laboratory Accreditation Bureau. Calibration performed in accordance with ISO 17025:2005 and ISO 10012:2003. This report may only be reproduced in full. Temperature and Humidity for on-site work may be reported above as the mean of high and low values recorded for all items on the day of service. If the data type is FOUND-LEFT then the As Found and As Left data are the same.

Remarks: .

Standards Used

Asset	Traceable Through	Description	Cal Date	Cal Due Date
B947	CERT#:186416	RICE LAKE 1MG - 100G CLASS 1 WEIGHT KIT (210.886G TOTAL)	06 May 2011	06 May 2012
B947A	CERT#186411,1740387A,1740387B	RICE LAKE 50G - 5KG CLASS 1 WEIGHT KIT (10950G TOTAL)	06 May 2011	06 May 2012

Test Results

Test Description	Range	True Value	Test Result	Lower Limit	Upper Limit		%TOL	Status
TESTED IN ACCORDANCE WITH NIST Handbook 44-2011 Section 2.20 Paragraphs N1.1, N1.3, N1.11, N.2,N.3.2 T.N.5 & Tables 4, T.11, 7A as Applicable.								
'PEATABILITY VERIFICATION: .esult of Operator Evaluation								Pass
SHIFT TEST VERIFICATION: Result of Operator Evaluation								Pass
LINEARITY:								
1.00 g		1.00	1.0	0.9	1.1	g	0	Pass
10.00 g		10.00	10.0	9.9	10.1	g	0	Pass
100.00 g		100.00	100.0	99.8	100.2	g	0	Pass
500.00 g		500.00	499.9	499.5	500.5	g	20	Pass
1000.00 g		1000.00	999.8	999.5	1000.5	g	40	Pass

Uncertainty of Measurement is 0.13 G

.rtificate # 73C84434DAD181478B741481253A333A
Date Printed: 10 Feb 2012 Form No.: 133 Rev 09/2011 Page 1 of 1

CONTROL DEVICE CERTIFICATION

The control device, Regenerative Fume Oxidizer (RFO), has been designed to operate at a destruction efficiency of at least 95 weight percent for both total organic compounds (TOC), less methane and ethane, and hazardous air pollutants (HAP).

I certify under penalty of law that this document and all attachments were prepared under my direction or supervision in accordance with a system designed to assure that qualified personnel properly gather and evaluate the information submitted. Based on my inquiry of the person or persons who manage the system, or those persons directly responsible for gathering the information, the information submitted is, to the best of my knowledge and belief, true, accurate, and complete. I am aware that there are significant penalties for submitting false information, including the possibility of fine and imprisonment for knowing violations.

Monte Londot

Monte Londot
General Manager, Clean Harbors Recycling Services of Ohio, LLC

12-17-2014
Date

ATTACHMENT 3

LIST OF APPROVED WASTE CODES

WASTE TYPES RECEIVED AT THE

CLEAN HARBORS HEBRON RECYCLE CENTER

EPA Waste No.	Description
F001	The following spent halogenated solvents used in degreasing: tetrachloroethylene, trichloroethylene, methylene chloride, 1,1,1-trichloroethane, carbon tetrachloride, chlorinated fluorocarbons, spent solvent mixtures/blends used in degreasing, and still bottoms from the recovery of these spent solvents and spent solvent mixtures.
F002	The following spent halogenated solvents: tetrachloroethylene, methylene chloride, trichloroethylene, 1,1,1-trichloroethane, chlorobenzene, 1,1,2-trichloro-1,2,2-trifluoroethane, orthodichlorobenzene, trichlorofluoromethane, 1,1,2-trichloroethane, spent solvent mixtures and blends, and the still bottoms from the recovery of these spent solvents and spent solvent mixtures.
F003	The following spent non-halogenated solvents: xylene, acetone, ethyl acetate, ethyl benzene, ethyl ether, methyl isobutyl ketone, n-butyl alcohol, cyclohexanone, methanol, spent solvent mixtures and blends, and the still bottoms from the recovery of these spent solvents and spent solvent mixtures.
F004	The following spent non-halogenated solvents: cresols and cresylic acid, nitrobenzene, spent solvent mixtures and blends, and still bottoms from the recovery of these spent solvents and spent solvent mixtures.
F005	The following spent non-halogenated solvents: toluene, methyl ethyl ketone, carbon disulfide, isobutanol, pyridine, benzene, 2-ethoxyethanol, 2-nitropropane, spent solvent mixtures and blends, and the still bottoms from the recovery of these spent solvents and spent solvent mixtures.
D001	Solid waste that exhibits the characteristic of ignitability, but is not listed as a hazardous waste.
D004	Arsenic at 5.0 mg/l or more.
D006	Cadmium at 1.0 mg/l or more.
D008	Lead at 5.0 mg/l or more.
D009	Mercury at 0.2 mg/l or more.
D011	Silver at 5.0 mg/l or more.
D018	Benzene at 0.5 mg/l or greater.
D019	Carbon tetrachloride at 0.5 mg/l or greater.
D021	Chlorobenzene at 100.0 mg/l or greater.

EPA Waste No.	Description
D022	Chloroform at 6.0 mg/l or greater.
D023	O-Cresol at 200 mg/l or greater.
D024	M-Cresol at 200 mg/l or greater.
D025	P-Cresol at 200 mg/l or greater.
D026	Cresol at 200 mg/l or greater.
D027	1,4-dichlorobenzene at 7.5 mg/l or greater.
D028	1,2-dichlorobenzene at 0.5 mg/l or greater.
D029	1,1-dichloroethylene at 0.7 mg/l or greater.
D030	2,4-dinitrotoluene at 0.13 mg/l or greater.
D032	Hexachlorobenzene at 0.13 mg/l or greater.
D033	Hexachoro-1,3-butadiene at 0.5 mg/l or greater.
D034	Hexachloroethane at 3.0 mg/l or greater.
D035	Methyl ethyl ketone at 200 mg/l or greater.
D036	Nitrobenzene at 2.0 mg/l or greater.
D039	Tetrachloroethylene at 0.7 mg/l or greater.
D040	Trichloroethylene at 0.5 mg/l or greater.
K006	Wastewater treatment sludge from the production of chrome oxide green pigments
K016	Heavy ends or distillation residues from the production of carbon tetrachloride
K030	Column bottoms or heavy ends from the combined production of trichloroethylene and perchloroethylene.
K052	Tank bottoms (leaded) from the petroleum refining industry.
K085	Distillation or fractionation column bottoms from the production of chlorobenzene.
K095	Distillation bottoms from the production of 1,1,1-trichloroethane.
K096	Heavy ends from the heavy ends column from the production of 1,1,1-trichlorethane.
K105	Separated aqueous stream from the reactor product washing step in the production of chlorobenzenes
K141	Process residues from the recovery of coal tar, including, but not limited to, collecting sump residues from the production of coke from coal or the recovery of coke by-products produced from coal. This listing does not include K087 (decanter

EPA Waste No.	Description
	tank tar sludges from coking operations)
K142	Tar storage tank residues from the production of coke from coal or from the recovery of coke by-products produced from coal
K143	Process residues from the recovery of light oil, including, but not limited to, those generated in stills, decanters, and wash oil recovery units from the recovery of coke by-products produced from coal
K144	Wastewater sump residues from light oil refining, including, but not limited to, intercepting or contamination sump sludges from the recovery of coke by-products produced from coal
K145	Residues from naphthalene collection and recovery operations from the recovery of coke by-products produced from coal
K147	Tar storage tank residues from coal tar refining
K148	Residues from coal tar distillation, including, but not limited to, still bottoms
U002	Acetone
U003	Acetonitrile
U019	Benzene
U031	1-Butanol
U037	Chlorobenzene
U041	Chloromethyloxirane
U051	Creosote
U052	Cresols
U055	Cumene
U056	Cyclohexane
U057	Cyclohexanone
U068	Methane, dibromo-
U069	Dibutyl phthalate
U070	o-Dichlorobenzene
U071	m-Dichlorobenzene
U072	p-Dichlorobenzene
U075	Dichlorodifluoromethane

EPA Waste No.	Description
U077	Ethane, 1,2-dichloro
U078	1,1-Dichloroethylene
U079	1,2-Dichloroethylene
U080	Methylene Chloride
U083	1,2-Dichloropropane
U084	1,3-Dichloropropene
U108	1,4-Dioxane
U117	Ethyl ether
U121	Trichloromonofluoromethane
U124	Furan
U140	Isobutyl alcohol
U154	Methanol
U159	Methyl ethyl ketone
U161	Methyl isobutyl ketone
U165	Naphthalene
U169	Nitrobenzene
U171	2-Nitropropane
U191	2-Picoline
U210	Tetrachloroethylene
U211	Methane, tetrachloro
U213	Tetrahydrofuran
U220	Toluene
U226	1,1,1-Trichloroethane
U227	I,I,2-Trichloroethane
U228	Trichloroethylene
U239	Xylene

SECTION 14

SUBPART BB - AIR EMISSION STANDARDS FOR EQUIPMENT LEAKS

1. INTRODUCTION

Clean Harbors Recycling Services of Ohio, LLC (Clean Harbors, Hebron Facility/Recycle Center) is an organic chemical and solvent recycling facility located at 581 Milliken Drive, S.E., Hebron, Ohio. The Hebron Recycle Center receives, stores and recycle/recovers a wide range of organic waste materials that are listed on the Hazardous Waste Permit Information Form found in Section 1 of the Part B Permit Application.

The Hebron facility is operating as a RCRA TSD facility under a Part B Permit issued by the Ohio Environmental Protection Agency on June 30, 2005.

2. APPLICABILITY – EQUIPMENT LEAKS REGULATIONS

The Hebron Recycle Center manages various organic chemicals and solvents ranging in concentration up to 100% by weight. The equipment listed in Attachment 4 is subject to the requirements of 40 CFR 264.1050 since the equipment is located at the Hebron Facility, which is subject to the TSD facility standards. The equipment listed contains or contacts hazardous wastes containing up to 100% by weight organic chemicals, much greater than the 10% specified in 264.1050(b)

The equipment is also subject to the requirements of 40 CFR 63.691 (Subpart DD – National Emission Standards for Hazardous Pollutants from Off-Site Waste and Recovery Operations). As per 264.1064(m),

> The owner or operator of a facility with equipment that is subject to this subpart and to regulations at 40 CFR part 60, part 61, or part 63 may elect to determine compliance with this subpart either by documentation pursuant to §264.1064 of this subpart, or by documentation of compliance with the regulations at 40 CFR part 60, part 61, or part 63 pursuant to the relevant provisions of the regulations at 40 part 60, part 61, or part 63. The documentation of compliance under regulations at 40 CFR part 60, part 61, or part 63 shall be kept with or made readily available with the facility operating record.

the requirements of 40 CFR 264 Subpart BB would not apply as the facility is currently complying with the requirements of 40 CFR 61 Subpart V (per 40 CFR 63.691).

3. STANDARDS FOR EQUIPMENT LEAKS

Pursuant to the requirements of 40 CFR 63.691 – Standards: Equipment Leaks, Clean Harbors has implemented the requirements found in 40 CFR 61.242 – 247.

61.242-1 Standards: General

(d) Each piece of equipment to which this subpart applies shall be marked in such a manner that it can be distinguished readily from other pieces of equipment in VOC service. Attachment 4 contains a list of all the equipment located at the facility that is subject to this subpart.

(e) Equipment that is in vacuum service is excluded from the requirements of § 61.242–2, to § 61.242–11 if it is identified as required in § 61.246(e)(5). All equipment in Vacuum service is noted in the remarks section of the equipment list.

61.242-2 Standards: Pumps
Inspection and Monitoring –

1. Monthly leak detection by VOC analyzer (EPA Method 21), (MSA Passport PID II Organic Vapor Monitor)
2. Weekly visual inspection for leaks (Supervisor)
3. A weatherproof tag must be attached to the leaking equipment with the date it was found leaking. This tag can be removed after repairs have been made.
4. Exceptions:
   a. Pumps with dual mechanical systems that include a barrier fluid system.
   b. Pumps designated as having "No Detectable Emissions", i.e., unsealable pumps (e.g., canned motor pumps, diaphragm pumps) measuring less than 500 ppm above background by VOC analyzer (EPA Method 21), (MSA Passport PID II Organic Vapor Monitor)

Definition of Pump Leak –
1. Liquid dripping from pump seal (by visual inspection)
2. Greater than 10,000 ppm levels as measured by VOC analyzer (EPA Method 21), (MSA Passport PID II Organic Vapor Monitor)

Repair Requirements –
1. A first attempt at repair must be made within 5 calendar days following detection of a leak.
2. Pump must be repaired "as soon as practicable", but not later than 15 calendar days following detection of a leak.
3. Allowable delays –
   a. If shutdown of process unit is required.
   b. If repair will be by replacement with dual mechanical seal system, then repair must be completed "as soon as practicable", but not later than 6 months following detection of a leak.

61.242-3 Standards: Compressors
There are no compressors associated with process units located at the facility.

61.242-4 Standards: Pressure relief devices in gas/vapor service
Inspection and Monitoring –
1. Except during pressure releases, must be operated with "no detectable emissions" unless the pressure relief device is connected to a closed-vent system capable of containing and transporting leaks to a 95 percent efficient emissions control system.
2. Must be monitored for "No detectable emissions" by a VOV analyzer (EPA Method 21) (MSA Passport PID II Organic Vapor Monitor) within 5 calendar days following pressure release.

Repair Requirements –
1. After each pressure release, must be returned to a condition of "No detectable emissions" as soon as practicable, but not later than 5 calendar days following a pressure release unless the pressure relief device is connected to a closed-vent system capable of containing and transporting leaks to a 95 percent efficient emissions control system..

61.242-5 Standards: Sampling connecting systems
There are no sampling connecting systems associated with process units located at the facility.

61.242-6 Standards: Open-ended lines or valves
Requirements –

1. Must be equipped with a cap, blind flange, plug or second valve unless a request for a determination of alternative means of emission limitation to the requirements has been granted.

61.242-7 Standards: Valves
Inspection and Monitoring –

1. Monthly monitoring by VOC analyzer (EPA Method 21), (MSA Passport PID II Organic Vapor Monitor)
2. Any valve for which a leak is not detected for two successive months may be monitored the first month of each succeeding quarter, beginning with the next quarter, until a leak is detected. If a leak is detected, the valve must be monitored monthly until a leak is not detected for two successive months.
3. A weatherproof tag must be attached to a valve found leaking with the date it was found leaking. This tag must stay on the valve for two successive months with no leak detected.
4. Exceptions:
   a. Valves in vacuum service.
   b. Valves designated as having "No Detectable Emissions" (e.g., diaphragm and pinch valves).
   c. Valves designated as "Unsafe to Monitor" (i.e., would expose monitoring personnel to "immediate danger").
   d. Valves designated as "Difficult to Monitor", (i.e., would require elevating personnel more than 2 meters (6' 6") above a support surface). Any such valves with this designation are noted in the Remarks column of the equipment list as "DTM" and they are monitored annually.

Definition of Valve Leak –

1. Liquid dripping from valve body (by visual inspection)
2. Greater than 10,000 ppm levels as measured by VOC analyzer (EPA Method 21), (MSA Passport PID II Organic Vapor Monitor)

Repair Requirements –

1. Must be initiated no later than 5 calendar days following detection of leak.
2. Must be repaired "as soon as practicable", but not later than 15 calendar days following detection of a leak.

61.242-8 Standards: Pressure relief devices in liquid service and flanges and other connectors
Inspection and Monitoring –

1. Excluded from regular inspection and monitoring requirements.
2. Must be monitored by a VOC analyzer (EPA Method 21), (MSA Passport PID II Organic Vapor Monitor) within 5 days of visual detection of a leak.
3. A weatherproof tag must be attached to the leaking equipment with the date it was found leaking. This tag can be removed after repairs have been made.

Repair Requirements –

1. Must be initiated no later than 5 calendar days following detection of leak.
2. Must be repaired "as soon as practicable", but not later than 15 calendar days following detection of a leak.

61.242-9 Standards: Product accumulator vessels

There are no sampling product accumulator vessels associated with process units located at the facility.

61.242-11 Standards: Closed-vent systems and control devices

(c) Enclosed combustion devices shall be designed and operated to reduce the VHAP emissions vented to them with an efficiency of 95 percent or greater or to provide a minimum residence time of 0.50 seconds at a minimum temperature of 760°C. Attachment 2 contains information on the closed vent system and results from the most recent stack test conducted on the control device.

(f) (2) Closed-event systems shall be monitored to determine compliance with this section initially in accordance with § 61.05, annually, and at other times requested by the administrator. The closed vent system operates under vacuum and is inspected annually for defects.

61.245 Test methods and procedures

1. Monitoring shall comply with Method 21 of appendix A of 40 CFR part 60.
2. The detection instrument shall meet the performance criteria of Reference Method 21. Facility uses the MSA Passport PID II Organic Vapor Monitor
3. The instrument shall be calibrated before use on each day of its use by the procedures specified in Reference Method 21.
4. Calibration gases shall be: Zero air (less than 10 ppm of hydrocarbon in air) and a mixture of methane or n-hexane and air at a concentration of approximately, but less than, 10,000 ppm methane or n-hexane.
5. The instrument probe shall be traversed around all potential leak interfaces as close to the interface as possible as described in Reference Method 21.

61.246 Recordkeeping requirements

1. A monitoring report is filled out each month (See Attachment 5).
2. A calibration log for the detection instrument is maintained.
3. An equipment list of all covered equipment is maintained along with P&ID's for each process unit at the facility.

61.247 Reporting requirements

1. A report shall be submitted to the Administrator semiannually that includes the following information:
   a. Process unit identification
   b. Number of valves for which leaks were detected and number of valves for which leaks were not repaired as required
   c. Number of pumps for which leaks were detected and number of pumps for which leaks were not repaired as required
   d. The facts that explain any delay of repairs and, where appropriate, why a process unit shutdown was technically infeasible
   e. Dates of process unit shutdowns which occurred within the semiannual reporting period

f. Revisions to items reported according to paragraph (a) if changes have occurred since the initial report or subsequent revisions to the initial report
g. The results of all performance tests and monitoring to determine compliance conducted within the semiannual reporting period

Attachment 14-1

Clean Harbors Recycling Services of Ohio, LLC
Federal Equipment Leaks Standard
Monitoring Program
Subpart BB

A. Subpart BB equipment leak standard applies to :
   1. Pumps
   2. Valves
   3. Compressors
   4. Flanges and other connectors
   5. Pressure relief devices
   6. Sampling connection systems
   7. Open ended valves or lines
   8. Closed-vent systems and control devices

   If they contain or contact hazardous waste with organic concentrations greater than 100,000 ppm (10%) by weight.

   See Attachment 1 for equipment that has been tagged for inspection at the Hebron Recycle Center.

B. Leak detection and repair (LDAR) requirements
   1. Pumps in Light Liquid service
      Note: "Light Liquid" are those that contain one or more compounds that having a vapor pressure greater than 2.0 mm Hg at 68 deg F and the total concentration of individual components meeting this criteria is greater than 20% and are a liquid at operating temperatures. All liquids that do not meet these criteria are considered to be "Heavy Liquids". For example, Parts Washer Solvent and IC are heavy liquids.

      a. Inspection and Monitoring
         1) Weekly visual inspection for leaks (Supervisor)
         2) Monthly leak detection by VOC analyzer (EPA Method 21), (MSA Passport PID II Organic Vapor Monitor)
         3) A weatherproof tag must be attached to the leaking equipment with the date it was found leaking. This tag can be removed after repairs have been made.
         4) Exceptions -
            a) Pumps with dual mechanical seals having sensors to detect failure of the seal system, the barrier fluid system, or booth.
            b) Pumps designated as having "No Detectable Emissions", i.e., unsealable pumps (e.g., canned motor pumps, diaphragm pumps) measuring less than 500 ppm above background by VOC analyzer (EPA Method 21), (MSA Passport PID II Organic Vapor Monitor)

      b. Definition of Pump Leak
         1) Liquid dripping from pump seal (by visual inspection)
         2) Greater than 10,000 ppm levels as measured by VOC analyzer (EPA Method 21), (MSA Passport PID II Organic Vapor Monitor)

      c. Repair Requirements
         1) A first attempt at repair must be made within 5 calendar days following detection of a leak.

2) Pump must be repaired "as soon as practicable", but not later than 15 calendar days following detection of a leak.
3) Allowable delays -
    a) If shutdown of hazardous waste management unit is required.
    b) If repair will be by replacement with dual mechanical seal system, then repair must be completed "as soon as practicable", but not later than 6 months following detection of a leak.

2. Valves in Gas/Vapor Service or in Light Liquid Service
    a. Inspection and Monitoring
        1) Monthly monitoring by VOC analyzer (EPA Method 21), (MSA Passport PID II Organic Vapor Monitor)
        2) Any valve for which a leak is not detected for two successive months may be monitored the first month of each succeeding quarter, beginning with the next quarter, until a leak is detected. If a leak is detected, the valve must be monitored monthly until a leak is not detected for two successive months.
        3) A weatherproof tag must be attached to a valve found leaking with the date it was found leaking. This tag must stay on the valve for two successive months with no leak detected.
        4) Exceptions:
            a) Valves in vacuum service.
            b) Valves designated as having "No Detectable Emissions" (e.g., diaphragm and pinch valves).
            c) Valves designated as "Unsafe to Monitor" (i.e., would expose monitoring personnel to "immediate danger").
            d) Valves designated as "Difficult to Monitor", (i.e., would require elevating personnel more than 2 meters (6' 6") above a support surface). At this time we have XX such valves with this designation and they are monitored annually.

    b. Repairs
        1) Must be initiated no later than 5 calendar days following detection of leak.
        2) Must be repaired "as soon as practicable", but not later than 15 calendar days following detection of a leak.

3. Pumps and Valves in Heavy Liquid Service, Pressure Relief Devices in Light Liquid or Heavy Liquid Service and Flanges and Other Connectors in Light Liquid or Heavy Liquid Service
    a. Inspection and Monitoring
        1) Excluded from regular inspection and monitoring requirements.
        2) Must be monitored by a VOC analyzer (EPA Method 21), (MSA Passport PID II Organic Vapor Monitor) within 5 days of visual detection of a leak.
        3) A weatherproof tag must be attached to the leaking equipment with the date it was found leaking. This tag can be removed after repairs have been made, except for valves for which section 2.a.3) above must be followed.

    b. Repairs
        1) Must be initiated within 5 calendar days following detection of a leak.

2) Must be repaired "as soon as practicable", but not later than15 calendar days following detection of a leak.

4. Pressure Relief Devices in Gas/Vapor Service
   a. Inspection and Monitoring
      1) Except during pressure releases, must be operated with "no detectable emissions" unless the pressure relief device is connected to a closed-vent system capable of containing and transporting leaks to a 95 percent efficient emissions control system.
      2) Must be monitored for "No detectable emissions" by a VOV analyzer (EPA Method 21) (MSA Passport PID II Organic Vapor Monitor) within 5 calendar days following pressure release.
   b. Repairs
      1) After each pressure release, must be returned to a condition of "No detectable emissions" as soon as practicable, but not later than 5 calendar days following a pressure release.

5. Open-ended Valves or Lines
   a. Must be equipped with a cap, blind flange, plug or second valve.

C. Reporting Requirements
   1. RCRA Permitted Facilities
      a. A semi-annual report to the EPA Administrator must be made if a detected leak is not repaired within the designated time period. The report must include details of equipment and leaks that were not fixed within 15 days. No reporting is required if leaks were fixed within 15 days.

D. Recordkeeping Requirements
   1. A monitoring report is filled out each month (See Attachment B).

E. Monitoring Equipment
   1. We use the MSA Passport PID II Organic Vapor Monitor.
   2. The MSA Passport PID II Organic Vapor Monitor is calibrated each time before it is used for monitoring. Records of calibration are maintained in the operating log. (See Attachment C for Calibration Form and Instructions)

Attachment A

Example Tagged/Monitored Equipment Lists

Example Pumps List/Tags

ITEM #	TYPE	LINE #/LOCATION	P&ID	DISCRIPTION	REMARKS
P-1102	PUMP	STILL ROOM	642-1100-101	COLUMN BTMS PUMP	EPA-21
P-1103	PUMP	COLUMN AREA INSIDE	642-1100-102	COLUMN OVERHEADS PUMP	EPA-21
P-1601	PUMP	Dehydration System	642-1600-101	Dehydration Condensate Pump	EPA-21
P-2101	PUMP	STILL ROOM	642-2100-101	LUWA #1 BTMS PUMP	EPA-21
P-2102	PUMP	STILL ROOM	642-2100-100	SECONDARY FEED PUMP	EPA-21
P-2105	PUMP	2ND DECK AT VAC. PUMP	642-2100-103	VACUUM PUMP FOR LUWA #1	
P-2201	PUMP	STILL ROOM	642-2200-101	LUWA #2 BTMS PUMP	EPA-21
P-2203	PUMP	SECOND DECK STILL ROOM	642-2200-103	VACUUM PUMP FOR LUWA #2	
P-2601	PUMP	WASHEX #1 BTMS PUMP	642-2600-100	STILL ROOM	Not In Service
P-3002	PUMP	COOKER VACUUM SKID	642-3000-101	COOKER VACUUM PUMP	
P-3003	PUMP	COOKER VACUUM SKID	642-3000-101	SEAL WATER CIRCULATING PUMP	
P-3206	PUMP	COOKER #2	642-3200-100	COOKER BOTTOMS PUMP	EPA-21
P-4102	PUMP	TANKER TUNNEL #1	642-4100-101	VIRGIN UNLOADINGPUMP	EPA-21
P-4103	PUMP	TF1 HOSE PIT	642-4100-106	PUMP 4 IN TF1 HOSE PIT	EPA-21
P-4104	PUMP	TF1 HOSE PIT	642-4100-106	PUMP 2 IN TF1 HOSE PIT	EPA-21
P-4106	PUMP	TF1 HOSE PIT	642-4100-106	PUMP 5 IN TF1 HOSE PIT	EPA-21
P-4107	PUMP	TF1 HOSE PIT	642-4100-106	PUMP 6 IN TF1 HOSE PIT	EPA-21
P-4108	PUMP	DIRTY M/S TRK UNLDNG	642-4100-103	TRK UNLDG ST.N	EPA-21
P-4109	PUMP	SUMP PUMP	642-4100-104	TANK FARM #1	EPA-21
P-4114	PUMP	TF1 HOSE PIT	642-4100-106	PUMP 3 IN TF1 HOSE PIT	EPA-21
P-4115	PUMP	TF1 HOSE PIT	642-4100-106	PUMP 1 IN TF1 HOSE PIT	EPA-21
P-4201	PUMP	TANK FARM #2	642-4200-100	COOKER FEED PUMP	EPA-21
P-4202	PUMP	TANK FARM #2	642-4200-100	SNAKE PIT SUMP PUMP	EPA-21
P-4203	PUMP	TANK FARM #2	642-4200-101	LUWA #2 FEED PUMP	EPA-21
P-4204	PUMP	TRK UNLDG SUMP PUMP	642-4200-102	DIRTY CHLORO UNLOADING PUMP	EPA-21
P-4205	PUMP	TANK FARM #2	642-4200-102	LUWA #1 FEED PUMP	EPA-21
P-4206	PUMP	TANK FARM #2	642-4200-103	COLUMN FEED PUMP	EPA-21
P-4207	PUMP	TANK FARM #2	642-4200-100	NORTH DRYER FEED PUMP	EPA-21
P-4208	PUMP	TANK FARM #2	642-4200-100	SOUTH DRYER FEED PUMP	EPA-21
P-4209	PUMP	TANKFARM 2 PIT TRANSF.	642-4200-103	CHLORINATED TRANSFER PUMP	EPA-21
P-4210	PUMP	TANKFARM 2 PIT TRANSF.	642-4200-103	CHLORINATED TRANSFER PUMP	EPA-21

P-4303	PUMP	T/T#2	642-4300-103	VIRGIN UNLOADING PUMP	EPA-21
P-4401	PUMP	TANK FARM #4 8-PACK	642-4400-100	8PK PROCESS FEED PMP	EPA-21
P-4402	PUMP	TANK FARM #4 8-PACK	642-4400-100	TF #4 TRK UNLDG PUMP	EPA-21
P-4601	PUMP	TANK FARM #6	642-4600-101	HYDRA. DIL. FEED PUMP	
P-4603	PUMP	TANK FARM #6	642-4600-101	FUEL TRCK LOADING PUMP	EPA-21
P-4602	PUMP	BLUE ROOM	642-4600-101	JACCUZZI PUMP	EPA-21
P-5801	PUMP	IME SYSTEM OUTSIDE	642-5800-100	IME PUMP	EPA-21
P-5802	PUMP	IME SYSTEM OUTSIDE	642-5800-100	IME VACUUM PUMP	
P-7201	PUMP	WAREHOUSE	642-7200-100	PORTABLE PUMP #1	

Example Valves List/Tags

ITEM .	SIZE	TYPE	LINE ./LOCATION	P&ID	DISCRIPTION	DETECT. METHOD	REMARKS
V-A1	2"	BALL	2"PS-1085-A	642-4100-103	FROM M/S PUMPLINE T/T#1 RACK	EPA-21	Difficult To Monitor
V-A2F	3"	B.F.	P-4108 SUCTION LINE	642-4100-103	M/S UNL. PUMP T/T#1	EPA-21	
V-A3	1/2"	BALL	P-4108 SUC.LINE DRAIN	642-4100-103	M/S UNL. PUMP T/T#1	EPA-21	
V-A4F	3"	B.F.	DRAIN TO SUMP	642-4100-103	M/S UNL. PUMP T/T#1	EPA-21	
V-A5F	3"	B.F.	P-4108 STRAINER	642-4100-103	M/S UNL. PUMP T/T#1	EPA-21	
V-A6F	3"	B.F.	P-4108 STRAINER	642-4100-103	M/S UNL. PUMP T/T#1	EPA-21	
V-A7F	3"	B.F.	P-4108 STRAINER	642-4100-103	M/S UNL. PUMP T/T#1	EPA-21	
V-A8F	3"	B.F.	P-4108 STRAINER	642-4100-103	M/S UNL. PUMP T/T#1	EPA-21	
V-A9	1"	BALL	STRAINER DRAIN	642-4100-103	M/S UNL. PUMP T/T#1	EPA-21	
V-A10	1"	BALL	STRAINER DRAIN	642-4100-103	M/S UNL. PUMP T/T#1	EPA-21	
V-A11	2"	BALL	DRAIN	642-4100-103	M/S UNL. PUMP T/T#1	EPA-21	
V-A12F	3"	B.F.	3" PS-1004-A	642-4100-103	M/S UNL. PUMP T/T#1	EPA-21	
V-A13F	3"	B.F.	3" PS-1004-A-H	642-4100-103	M/S UNL. MANIFOLD	EPA-21	
V-A14	3"	FL CK	3" PS-1006-A-H	642-4100-102	T-32	EPA-21	Difficult To Monitor
V-A15	2"	BALL	T-32 LINE TO HOSE PIT	642-4100-102	T-32 2" VALVE FOR HOSE CONNECTION	EPA-21	
V-A16	2"	BALL	T-33 LINE TO HOSE PIT	642-4100-102	T-33 2" VALVE FOR HOSE CONNECTION	EPA-21	
V-A17	2"	BALL	T-34 LINE TO HOSE PIT	642-4100-102	T-34 2" VALVE FOR HOSE CONNECTION	EPA-21	
V-A18	2"	BALL	T-35 INLET/OUTLET LINE	642-4100-102	T-35 2" VALVE FOR HOSE CONNECTION	EPA-21	
V-A19	2"	BALL	T-36 INLET/OUTLET LINE	642-4100-102	T-36 2" VALVE FOR HOSE CONNECTION	EPA-21	
V-A20	2"	BALL	T-39 INLET/OUTLET LINE	642-4100-102	T-39 2" VALVE FOR HOSE CONNECTION	EPA-21	
V-A21	2"	BALL	T-40 INLET/OUTLET LINE	642-4100-103	T-40 2" VALVE FOR HOSE CONNECTION	EPA-21	
V-A22	2"	BALL	T-41 INLET/OUTLET LINE	642-4100-103	T-41 TANK HOSE CONNECTION LINE	EPA-21	
V-A23	2"	BALL	T-42 INLET/OUTLET LINE	642-4100-103	T-42 2" VALVE FOR HOSE CONNECTION	EPA-21	
V-A24	2"	BALL	T-43 INLET/OUTLET LINE	642-4100-103	T-43 2" VALVE FOR HOSE CONNECTION	EPA-21	
V-A25	2"	BALL	T-44 INLET/OUTLET LINE	642-4100-103	T-44 2" VALVE FOR HOSE CONNECTION	EPA-21	
V-A26	4"	BALL	4" WW-1232-A	642-4100-102	N.END E.SLUDGE LINE	EPA-21	
V-A27	4"	BALL	4" WW-1231-A	642-4100-103	N.END W.SLUDGE LINE	EPA-21	
V-A28	1/2"	BALL	4" WW-1232-A	642-4100-102	N.END E.SLUDGE LINE DRAIN	EPA-21	

V-A29	3"	FL CK	3" PS-1007-A-H	642-4100-102	T-33	EPA-21	Difficult To Monitor
V-A30	3"	FL CK	T-36 LINE TO HOSE PIT	642-4100-102	T-36 FUSABLE LINK FIRE VALVE	EPA-21	
V-A31	3"	FL CK	T-35 INLET/OUTLET LINE	642-4100-102	T-35 FUSABLE LINK FIRE VALVE	EPA-21	
V-A32	3"	FL CK	T-34 INLET/OUTLET LINE	642-4100-102	T-34 FUSABLE LINK FIRE VALVE	EPA-21	
V-A33	3"	FL CK	T-39 INLET/OUTLET LINE	642-4100-102	T-39 FUSABLE LINK FIRE VALVE	EPA-21	
V-A34	3"	FL CK	T-40 INLET/OUTLET LINE	642-4100-103	T-40 FUSABLE LINK FIRE VALVE	EPA-21	
V-A35	3"	FL CK	T-44 INLET/OUTLET LINE	642-4100-103	T-44 FUSABLE LINK FIRE VALVE	EPA-21	
V-A36	3"	FL CK	T-42 INLET/OUTLET LINE	642-4100-103	T-42 FUSABLE LICK FIRE VALVE	EPA-21	
V-A37	3"	FL CK	T-43 INLET/OUTLET LINE	642-4100-103	T-43 FUSABLE LINK FIRE VALVE	EPA-21	
V-A38	3"	FL CK	T-41 INLET/OUTLET LINE	642-4100-103	T-41 FUSABLE LINK FIRE VALVE	EPA-21	
V-A39F	3"	GATE	T-33 INLET/OUTLET LINE	642-4100-102	T-33 3" VALVE AFTER FIRE VALVE	EPA-21	
V-A40F	3"	GATE	T-32 INLET/OUTLET LINE	642-4100-102	T-32 3" VALVE ON INLET/OUTLET	EPA-21	
V-A41	2"	BALL	TF1 HOSE PIT - T-39	642-4100-106	T-39 LINE 2" VALVE	EPA-21	
V-A42F	3"	GATE	T-35 INLET/OUTLET LINE	642-4100-102	T-35 GATE VALVE AFTER FIRE VALVE	EPA-21	
V-A43F	3"	GATE	T-34 INLET/OUTLET LINE	642-4100-102	T-34 3" GATE VALVE	EPA-21	
V-A44F	3"	GATE	T-39 INLET/OUTLET LINE	642-4100-102	T-39 GATE VALVE	EPA-21	
V-A45F	3"	GATE	T-40 INLET/OUTLET LINE	642-4100-103	T-40 3" GATE VALVE	EPA-21	
V-A46F	3"	GATE	T-44 INLET/OUTLET LINE	642-4100-103	T-44 GATE VALVE	EPA-21	
V-A47F	3"	GATE	T-42 INLET/OUTLET LINE	642-4100-103	T-42 GATE VALVE	EPA-21	
V-A48F	3"	GATE	T-43 INLET/OUTLET LINE	642-4100-103	T-43 GATE VALVE	EPA-21	
V-A49F	3"	GATE	T-41 INLET/OUTLET LINE	642-4100-103	T-4 GATE VALVE	EPA-21	
V-A50	3/4"	BALL	T-32 OUTLET CONE TOP	642-4100-102	T-32 SAMPLE VALVE	EPA-21	
V-A51	3/4"	BALL	T-32 OUTLET CONE TOP	642-4100-102	T-32 SAMPLE VALVE	EPA-21	
V-A52	1"	BALL	T-44 OUTLET CONE TOP	642-4100-103	T-44 SAMPLE VALVE	EPA-21	
V-A53	2"	BALL	TF1 HOSE PIT - T-41	642-4100-106	T-41 LINE 2" VALVE	EPA-21	
V-A54	2"	BALL	TF1 HOSE PIT - T-32	642-4100-106	T-32 LINE 2" VALVE	EPA-21	
V-A55	1"	BALL	T-44 OUTLET CONE TOP	642-4100-103	T-44 SAMPLE VALVE	EPA-21	
V-A56	1"	BALL	TF1 HOSE PIT - T-41	642-4100-106	T-41 LINE 1" VALVE	EPA-21	
V-A57	1"	BALL	TF1 HOSE PIT - T-32	642-4100-106	T-32 LINE 1" VALVE	EPA-21	
V-A58	1"	BALL	T-42 OUTLET CONE TOP	642-4100-103	T-42 SAMPLE VALVE	EPA-21	
V-A59	2"	BALL	TF1 HOSE PIT - T-40	642-4100-106	T-40 LINE 2" VALVE	EPA-21	
V-A60	1"	BALL	T-36 OUTLET CONE TOP	642-4100-102	T-36 SAMPLE VALVE	EPA-21	
V-A61	3/4"	BALL	T-42 OUTLET CONE TOP	642-4100-103	T-42 SAMPLE VALVE	EPA-21	
V-A62F	1"	BALL	TF1 HOSE PIT - T-40	642-4100-106	T-40 LINE 1" VALVE	EPA-21	
V-A63	3/4"	BALL	T-36 OUTLET CONE TOP	642-4100-102	T-36 SAMPLE VALVE	EPA-21	
V-A64	3/4"	BALL	T-42 OUTLET CONE TOP	642-4100-103	T-42 SAMPLE VALVE	EPA-21	
V-A65F	2"	BALL	TF1 HOSE PIT - T-43	642-4100-106	T-43 LINE 2" VALVE	EPA-21	
V-A66	3/4"	BALL	T-36 OUTLET CONE TOP	642-4100-102	T-36 SAMPLE VALVE	EPA-21	
V-A67	1"	BALL	T-44 OUTLET CONE TOP	642-4100-103	T-44 SAMPLE VALVE	EPA-21	
V-A68F	1"	BALL	TF1 HOSE PIT - T-43	642-4100-106	T-43 LINE 1" VALVE	EPA-21	

Example Pressure Relief Valves List/Tags

ITEM .	SIZE	TYPE	LINE ./LOCATION	P&ID	DISCRIPTION	DETECT. METHOD	REMARKS
PRV-32	3"	RELIEF	T-32 TOP	642-4100-102	T-32 PRESSURE VACUUM VENT	EPA-21	
PRV-33	3"	RELIEF	T-33 TOP	642-4100-102	T-33 PRESSURE VACUUM VENT	EPA-21	
PRV-34	3"	RELIEF	T-34 TOP	642-4100-102	T-34 PRESSURE VACUUM VENT	EPA-21	
PRV-35	3"	RELIEF	T-35 TOP	642-4100-102	T-35 PRESSURE VACUUM VENT	EPA-21	
PRV-36	3"	RELIEF	T-36 TOP	642-4100-102	T-36 PRESSURE VACUUM VENT	EPA-21	
PRV-37	3"	RELIEF	T-37 TOP	642-4100-104	T-37 PRESSURE VACUUM VENT	EPA-21	
PRV-39	3"	RELIEF	T-39 TOP	642-4100-102	T-39 PRESSURE VACUUM VENT	EPA-21	
PRV-40	3"	RELIEF	T-40 TOP	642-4100-103	T-40 PRESSURE VACUUM VENT	EPA-21	
PRV-41	3"	RELIEF	T-41 TOP	642-4100-103	T-41 PRESSURE VACUUM VENT	EPA-21	
PRV-42	3"	RELIEF	T-42 TOP	642-4100-103	T-42 PRESSURE VACUUM VENT	EPA-21	
PRV-43	3"	RELIEF	T-43 TOP	642-4100-103	T-43 PRESSURE VACUUM VENT	EPA-21	
PRV-44	3"	RELIEF	T-44 TOP	642-4100-103	T-44 PRESSURE VACUUM VENT	EPA-21	
PRV-45	3"	RELIEF	T-45 TOP	642-4100-104	T-45 PRESSURE VACUUM VENT	EPA-21	
PRV-48A	3"	RELIEF	T-48 TOP	642-4100-105	T-48A PRESSURE VACUUM VENT	EPA-21	
PRV-48B	3"	RELIEF	T-48 TOP	642-4100-105	T-48B PRESSURE VACUUM VENT	EPA-21	
PRV-48C	8"	RELIEF	T-48 TOP	642-4100-105	T-48B EMERG. PRESSURE RELIEF	EPA-21	
PRV-49	3"	RELIEF	T-49 TOP	642-4100-105	T-49 PRESSURE VACUUM VENT	EPA-21	
PRV-50	3"	RELIEF	T-50 TOP	642-4100-105	T-50 PRESSURE VACUUM VENT	EPA-21	
PRV-51	3"	RELIEF	T-51 TOP	642-4100-100	T-51 PRESSURE VACUUM VENT	EPA-21	
PRV-52	3"	RELIEF	T-52 TOP	642-4100-100	T-52 PRESSURE VACUUM VENT	EPA-21	
PRV-53	3"	RELIEF	T-53 TOP	642-4100-100	T-53 PRESSURE VACUUM VENT	EPA-21	
PRV-56	3"	RELIEF	T-56 TOP	642-4100-105	T-56 PRESSURE VACUUM VENT	EPA-21	
PRV-57	3"	RELIEF	T-57 TOP	642-4100-101	T-57 PRESSURE VACUUM VENT	EPA-21	
PRV-58	3"	RELIEF	T-57 TOP	642-4100-101	T-58 PRESSURE VACUUM VENT	EPA-21	
PRV-59	3"	RELIEF	T-59 TOP	642-4100-100	T-59 PRESSURE VACUUM VENT	EPA-21	
PRV-60	3"	RELIEF	T-60 TOP	642-4100-100	T-60 PRESSURE VACUUM VENT	EPA-21	
PRV-61	3"	RELIEF	T-61 TOP	642-4100-100	T-61 PRESSURE VACUUM VENT	EPA-21	
PRV-65	3"	RELIEF	T-65 TOP	642-4100-101	T-65 PRESSURE VACUUM VENT	EPA-21	
PRV-66	3"	RELIEF	T-66 TOP	642-4100-101	T-66 PRESSURE VACUUM VENT	EPA-21	
PRV-67	3"	RELIEF	T-67 TOP	642-4100-101	T-67 PRESSURE VACUUM VENT	EPA-21	
PRV-68	3"	RELIEF	T-68 TOP	642-4100-100	T-68 PRESSURE VACUUM VENT	EPA-21	
PRV-69	3"	RELIEF	T-69 TOP	642-4100-100	T-69 PRESSURE VACUUM VENT	EPA-21	
PRV-80	3"	RELIEF	TOP T-80	642-4200-105	T-80 PV VENT	EPA-21	
PRV-81	3"	RELIEF	T-81 TOP	642-4200-101	T-81 PRESSURE VACUUM VENT	EPA-21	
PRV-82	3"	RELIEF	T-82 TOP	642-4200-102	T-82 PRESSURE VACUUM VENT	EPA-21	
PRV-83A	3"	RELIEF	T-83 TOP	642-4200-100	T-83A PRESSURE VACUUM VENT	EPA-21	

PRV-83B	3"	RELIEF	T-83 TOP	642-4200-100	T-83B PRESSURE VACUUM VENT	EPA-21
PRV-83C	8"	RELIEF	T-83 TOP	642-4200-100	T-83B EMERG.PRESSURE RELIEF	EPA-21
PRV-84A	3"	RELIEF	T-84 TOP	642-4200-100	T-84A PRESSURE VACUUM VENT	EPA-21
PRV-84B	3"	RELIEF	T-84 TOP	642-4200-100	T-84B PRESSURE VACUUM VENT	EPA-21
PRV-84C	8"	RELIEF	T-84 TOP	642-4200-100	T-84B EMERG. PRESSURE RELIEF	EPA-21
PRV-85	3"	RELIEF	TOP T-85	642-4200-105	T-85 PV VENT	EPA-21
PRV-86	3"	RELIEF	T-86 TOP	642-4200-101	T-86 PRESSURE VACUUM VENT	EPA-21
PRV-87	3"	RELIEF	T-87 TOP	642-4200-102	T-87 PRESSURE VACUUM VENT	EPA-21
PRV-88	3"	RELIEF	T-88 TOP	642-4200-100	T-88 PRESSURE VACUUM VENT	EPA-21
PRV-89A	3"	RELIEF	T-89 TOP	642-4200-100	T-89A PRESSURE VACUUM VENT	EPA-21
PRV-89B	3"	RELIEF	T-89 TOP	642-4200-100	T-89B PRESSURE VACUUM VENT	EPA-21
PRV-89C	3"	RELIEF	T-89 TOP	642-4200-100	T-89B EMERG. PRESSURE RELIEF	EPA-21
PRV-90	3"	RELIEF	TOP T-90	642-4200-105	T-90 PV VENT	EPA-21
PRV-91	3"	RELIEF	T-91 TOP	642-4200-101	T-91 PRESSURE VACCUM VENT	EPA-21
PRV-92A	3"	RELIEF	T-92 TOP	642-4200-102	T-92A PRESSURE VACUUM VENT	EPA-21
PRV-92B	3"	RELIEF	T-92 TOP	642-4200-102	T-92B PRESSURE VACUUM VENT	EPA-21
PRV-92C	8"	RELIEF	T-92 TOP	642-4200-102	T-92B EMERG. PRESSURE RELIEF	EPA-21
PRV-93	3"	RELIEF	T-93 TOP	642-4200-100	T-93 PRESSURE VACUUM VENT	EPA-21
PRV-94A	3"	RELIEF	T-94 TOP	642-4200-100	T-94A PRESSURE VACUUM VENT	EPA-21
PRV-94B	3"	RELIEF	T-94 TOP	642-4200-100	T-94B PRESSURE VACUUM VENT	EPA-21
PRV-94C	8"	RELIEF	T-94 TOP	642-4200-100	T-94B EMERG. PRESSURE RELIEF	EPA-21
PRV-95	3"	RELIEF	TOP T-95	642-4200-105	T-95 PV VENT	EPA-21
PRV-98	3"	RELIEF	T-98 TOP	642-4600-101	T-98 PRESSURE VACUUM VENT	EPA-21
PRV-100	3"	RELIEF	TOP T-100	642-4200-105	T-100 PV VENT	EPA-21
PRV-101	3"	RELIEF	TOP T-101	642-4200-103	T-101 PV VENT	EPA-21
PRV-102A	3"	RELIEF	TOP T-102	642-4200-103	T-102A PV VENT	EPA-21
PRV-102B	3"	RELIEF	TOP T-102	642-4200-103	T-102B PV VENT	EPA-21
PRV-102C	3"	RELIEF	TOP T-102	642-4200-103	T-102B EMERGENCY RELIEF	EPA-21
PRV-103	3"	RELIEF	TOP T-103	642-4200-104	T-103 PV VENT	EPA-21
PRV-104	3"	RELIEF	TOP T-104	642-4200-104	T-104 PV VENT	EPA-21
PRV-105	3"	RELIEF	TOP T-105	642-4200-105	T-105 PV VENT	EPA-21
PRV-106	3"	RELIEF	TOP T-106	642-4200-103	T-106 PV VENT	EPA-21
PRV-107	3"	RELIEF	TOP T-107	642-4200-103	T-107 PV VENT	EPA-21
PRV-108	3"	RELIEF	TOP T-108	642-4200-104	T-108 PV VENT	EPA-21
PRV-109	3"	RELIEF	TOP T-109	642-4200-104	T-109 PV VENT	EPA-21
PRV-110	3"	RELIEF	TOP T-110	642-4200-105	T-110 PV VENT	EPA-21
PRV-111	3"	RELIEF	TOP T-111	642-4200-103	T-111 PV VENT	EPA-21

Example Flanges List/Tags

ITEM #	SIZE	TYPE	P&ID	LINE #/LOCATION	DISCRIPTION	DETECT# METHOD	REMARKS
FL-A1	3"	150#	642-4100-103	2"P-1085-A	M/S PUMPING LINE T/T#1	VISUAL	NOT ACCESSIBLE
FL-A2	3"	150#	642-4100-103	P-4108 SUCT. FLEX	T/T#1 M/S UNL. PUMP	VISUAL	
FL-A3	3"	150#	642-4100-103	P-4108 SUCT. FLEX	T/T #1 M/S UNL. PUMP	VISUAL	
FL-A4	3"	150#	642-4100-102	3" PS-1035	LUWA MANIFOLD	VISUAL	
FL-A5	4"	150#	642-4100-102	BLIND, T-32 OUTLET	T-32 INSIDE SKIRT	VISUAL	
FL-A6	4"	150#	642-4100-102	T-33 BOTTOM OUTLET	T-33 BOTTOM OUTLET	VISUAL	
FL-A7	4"	150#	642-4100-102	BLIND, T-33 OUTLET	T-33 INSIDE SKIRT	VISUAL	
FL-A8	4"	150#	642-4100-102	T-34 BOTTOM OUTLET	T-34 BOTTOM OUTLET	VISUAL	
FL-A9	4"	150#	642-4100-102	BLIND, T-34 OUTLET	T-34 INSIDE SKIRT	VISUAL	
FL-A10	6"	150#	642-4100-101	FUELS LINE IN T/T RACK	FLANGE IN 6" FUELS LOAD LINE	VISUAL	
FL-A11	4"	150#	642-4100-102	BLIND, T-35 OUTLET	T-35 INSIDE SKIRT	VISUAL	
FL-A12	3"	150#	642-4100-101	3" PS-1193-A	MS BOTTOMS OIL FLANGE	VISUAL	
FL-A13	4"	150#	642-4100-102	BLIND, T-36 OUTLET	T-36 INSIDE SKIRT	VISUAL	
FL-A14	6"	150#	642-4100-101	FUELS LINE IN T/T RACK	FLANGE IN 6" FUELS LOAD LINE	VISUAL	
FL-A15	4"	150#	642-4100-102	BLIND, T-39 OUTLET	T-39 INSIDE SKIRT	VISUAL	
FL-A16	3"	150#	642-4100-101	3" PS-1193-A	MS BOTTOMS OIL FLANGE	VISUAL	
FL-A17	4"	150#	642-4100-103	BLIND, T-40 OUTLET	T-40 INSIDE SKIRT	VISUAL	
FL-A18	4"	150#	642-4100-102	T-39 BOTTOM OUTLET	T-39 BOTTOM OUTLET	VISUAL	
FL-A19	4"	150#	642-4100-103	BLIND, T-41 OUTLET	T-41 INSIDE SKIRT	VISUAL	
FL-A20	1"	150#	642-4100-106	TF1 Hose Pit - L2 Feed Line	L2 Feed Line	VISUAL	
FL-A21	4"	150#	642-4100-103	BLIND, T-42 OUTLET	T-42 INSIDE SKIRT	VISUAL	
FL-A22	1"	150#	642-4100-106	TF1 Hose Pit - L2 Ovh Line	L2 Ovh Line	VISUAL	
FL-A23	4"	150#	642-4100-103	BLIND, T-43 OUTLET	T-43 INSIDE SKIRT	VISUAL	
FL-A24	3"	150#	642-4100-105	2" PS-1132-A-H	T-48A	VISUAL	
FL-A25	4"	150#	642-4100-103	BLIND, T-44 OUTLET	T-44 INSIDE SKIRT	VISUAL	
FL-A26	2"	150#	642-4100-102	2" PS-1035-A-H	LUWA MANIFOLD	VISUAL	
FL-A27	4"	150#	642-4100-103	2" PS-1055-A-H	WASHEX MANIFOLD	VISUAL	
FL-A28	4"	150#	642-4100-103	3" PS-1005-A-H	M/S UNLOADING MANIFOLD	VISUAL	
FL-A29	2"	150#	642-4100-102	2" PS-1005-A-H	M/S UNLOADING MANIFOLD	VISUAL	
FL-A30	4"	150#	642-4100-103	2" PS-1055-A-H	WASHEX MANIFOLD	VISUAL	
FL-A31	4"	150#	642-4100-103	3" PS-1005-A-H	M/S UNLOADING MANIFOLD	VISUAL	
FL-A32	3"	150#	642-4100-103	3" PS-1005-A-H	M/S UNLOADING MANIFOLD	VISUAL	
FL-A33	3"	150#	642-4100-103	3" PS-1005-A-H	M/S UNLOADING MANIFOLD	VISUAL	

FL-A34	3"	150#	642-4100-103	3" PS-1005-A-H	M/S UNLOADING MANIFOLD	VISUAL
FL-A35	3"	150#	642-4100-103	P-4108 SUCT. FLEX	T/T #1 SUMP	VISUAL
FL-A36	3"	150#	642-4100-103	P-4108 SUCT. FLEX	T/T #1 SUMP	VISUAL
FL-A37	2"	150#	642-4100-104	P-4109 DISCH. FLEX	T-37 SUMP PUMP	VISUAL
FL-A38	2"	150#	642-4100-104	P-4109 DISCH. FLEX	T-37 SUMP PUMP	VISUAL
FL-A39	8"	150#	642-4100-101	T-67 MIXER NOZZLE	T-67 MIXER NOZZLE BLIND	VISUAL
FL-A40	2"	150#	642-4100-101	T-67 TOP NOZZLE (LG)	T-67 TOP NOZZLE (LG)	VISUAL
FL-A41	2"	150#	642-4100-103	FLEX CONNECTOR	WASHEX CHARGE PUMP INLET	VISUAL
FL-A42	2"	150#	642-4100-103	FLEX CONNECTOR	WASHEX CHARGE PUMP INLET	VISUAL
FL-A43	2"	150#	642-4100-103	FLEX CONNECTOR	WASHEX CHARGE PUMP	VISUAL
FL-A44	2"	150#	642-4100-103	FLEX CONNECTOR	WASHEX CHARGE PUMP	VISUAL
FL-A45	2"	150#	642-4100-106	TF1 Hose Pit - L2 Btm Line	L2 Btm Line	VISUAL
FL-A46	3"	150#	642-4100-106	TF1 Hose Pit - Solvent	Solvent Loading Line	VISUAL
FL-A47	3"	150#	642-4100-101	2" PS-1192-A	T-67 PUMP SUCTION FLEX	VISUAL
FL-A48	3"	150#	642-4100-101	2" PS-1192-A	T-67 PUMP SUCTION FLEX	VISUAL
FL-A49	4"	150#	642-4100-101	3" PS-1192-A	T-67	VISUAL
FL-A50	3"	150#	642-4100-106	TF1 Hose Pit Solvent	Solvent Unloading Line	VISUAL
FL-A51	3"	150#	642-4100-101	3" PS-1193-A	FLEX JOINT T-67 PUMP DISCH.	VISUAL
FL-A52	3"	150#	642-4100-101	3" PS-1193-A	FLEX JOINT T-67 PUMP DISCH.	VISUAL
FL-A53	3"	150#	642-4100-105	1 1/2" PS-1131-A-H	T-48B	VISUAL
FL-A54	4"	150#	642-4100-104	T-37 BTMS. OUTLET	T-37 INSIDE SKIRT	VISUAL
FL-A55	3"	150#	642-4100-104	3" PS-1095-A-H	T-45 SUCTION HEADER	VISUAL
FL-A56	4"	150#	642-4100-104	3" WW-1091-A-H	T-45 INSIDE SKIRT	VISUAL
FL-A57	3"	150#	642-4100-105	3" PS-1116-A-H	T-48B	VISUAL
FL-A58	2"	150#	642-4100-104	3" PS-1108-A-H	T-45 PUMP DISCHARGE FLEX	VISUAL
FL-A59	2"	150#	642-4100-104	3" PS-1108-A-H	T-45 PUMP DISCHARGE FLEX	VISUAL
FL-A60	3"	150#	642-4100-104	3" PS-1095-A-H	T-45 PUMP SUCTION HEADER	VISUAL
FL-A61	3"	150#	642-4100-104	3" PS-1107-A-H	T-45 PUMP SUCTION FLEX	VISUAL
FL-A62	3"	150#	642-4100-104	3" PS-1107-A-H	T-45 PUMP SUCTION FLEX	VISUAL
FL-A63	4"	150#	642-4100-105	3" PS-1117-A-H	T-48A INSIDE SKIRT	VISUAL
FL-A64	3"	150#	642-4100-105	3" PS-1117-A-H	T-48A INSIDE SKIRT	VISUAL
FL-A65	3"	150#	642-4100-105	3" PS-1117-A-H	T-48A AT FL VALVE	VISUAL
FL-A66	4"	150#	642-4100-105	3" PS-1116-A-H	T-48B INSIDE SKIRT	VISUAL
FL-A67	3"	150#	642-4100-105	3" PS-1116-A-H	T-48B INSIDE SKIRT	VISUAL

Example Open End Connection List/Tags

ITEM #	SIZE	TYPE	LINE #/LOCATION	P&ID	DISCRIPTION	DETECT# METHOD	REMARKS
OE-A1	3"	OPEN END	P-4108 SUCTION	642-4100-103	P-4108 SUCTION	VISUAL	
OE-A2	1/2"	OPEN END	P-4108 SUCTION	642-4100-103	P-4108 SUCTION	VISUAL	
OE-A3	3"	OPEN END	SUMP T/T #1	642-4100-103	SUMP T/T #1	VISUAL	
OE-A4	2"	OPEN END	SUMP T/T #1	642-4100-103	SUMP T/T #1	VISUAL	
OE-A5	1"	OPEN END	SUMP T/T #1	642-4100-103	SUMP T/T #1	VISUAL	
OE-A6	1"	OPEN END	SUMP T/T #1	642-4100-103	SUMP T/T #1	VISUAL	
OE-A7	2"	HOSECONN	TF1 HOSE PIT - T-32	642-4100-106	T-32 LINE 2" HOSE CONNECTION	VISUAL	
OE-A8	1/2"	OPEN END	TF1 HOSE PIT - T-32	642-4100-106	T-32 LINE 1/2" OPEN END DRAIN	VISUAL	
OE-A9	3"	OPEN END	4" WW-1232-A	642-4100-102	TANK FARM #1	VISUAL	
OE-A10	4"	OPEN END	4" WW-1231-A	642-4100-103	TANK FARM #1	VISUAL	
OE-A11	3"	OPEN END	4" WW-1231-A	642-4100-103	TANK FARM #1	VISUAL	
OE-A12	4"	OPEN END	4" WW-1232-A	642-4100-104	TANK FARM #1 DRAIN INTO SUMP	VISUAL	
OE-A13	4"	OPEN END	4" WW-1231-A	642-4100-104	TANK FARM #1 DRAIN INTO SUMP	VISUAL	
OE-A14	2"	HOSECONN	T-34 HOSE CONNECTION	642-4100-102	T-34 HOSE CONNECTION AT TANK	VISUAL	
OE-A15	2"	HOSECONN	T-32 HOSE CONNECTION	642-4100-102	T-32 HOSE CONNECTION AT TANK	VISUAL	
OE-A16	2"	HOSECONN	T-33 HOSE CONNECTION	642-4100-102	T-33 HOSE CONNECTION AT TANK	VISUAL	
OE-A17	2"	HOSECONN	T-42 HOSE CONNECTION	642-4100-103	T-42 HOSE CONNECTION AT TANK	VISUAL	
OE-A18	2"	HOSECONN	T-41 HOSE CONNECTION	642-4100-103	T-41 HOSE CONNECTION AT TANK	VISUAL	
OE-A19	2"	HOSECONN	T-40 HOSE CONNECTION	642-4100-103	T-40 HOSE CONNECTION AT TANK	VISUAL	
OE-A20	3"	OPEN END	HOSE CONN. TO FUEL TRK	642-4100-101	FUEL TRUCK LOAD HOSE CONNECT	VISUAL	
OE-A21	2"	HOSECONN	T-43 HOSE CONNECTION	642-4100-103	T-43 HOSE CONNECTION AT TANK	VISUAL	
OE-A22	2"	HOSECONN	T-58 HOSE CONNECTION	642-4100-101	T-58 HOSE CONNECTION AT TANK	VISUAL	
OE-A23	3/4"	OPEN END	T-34 OUTLET CONE TOP	642-4100-102	T-34 SAMPLE LINE	VISUAL	
OE-A24	2"	HOSECONN	T-44 HOSE CONNECTION	642-4100-103	T-44 HOSE CONNECTION AT TANK	VISUAL	
OE-A25	1/2"	OPEN END	2" PS-1056-A-H	642-4100-101	P-4104 STR. DRN	VISUAL	
OE-A26	1/2"	OPEN END	2" PS-1056-A-H	642-4100-101	P-4104 STR. DRN	VISUAL	
OE-A27	3/8"	OPEN END	3" PS-1192-A	642-4100-101	P-4104	VISUAL	
OE-A28	1 1/2	OPEN END	3" PS-1192-A	642-4100-101	P-4104	VISUAL	
OE-A29	2"	HOSECONN	TF1 HOSE PIT - T-43	642-4100-106	T-43 LINE 2" HOSE CONNECTION	VISUAL	
OE-A30	2"	HOSECONN	T-48A INLET/OUTLET LINE	642-4100-105	T-48A HOSE CONNECTION AT TANK	VISUAL	
OE-A31	2"	HOSECONN	T-48B INLET/OUTLET LINE	642-4100-105	T-48B HOSE CONNECTION AT TANK	VISUAL	
OE-A32	2"	HOSECONN	T-50 INLET/OUTLET LINE	642-4100-105	T-50 HOSE CONNECTION AT TANK	VISUAL	

OE-A33	2"	HOSECONN	T-45 HOSE CONNECTION	642-4100-104	T-45 HOSE CONNECTION AT TANK	VISUAL
OE-A34	1/4"	OPEN END	P-4109 BLOWDOWN	642-4100-104	TANK FARM #1 T-37	VISUAL
OE-A35	1/4"	OPEN END	P-4109 SAMPLE	642-4100-104	P-203	VISUAL
OE-A36	2"	HOSECONN	T-37 HOSE CONNECTION	642-4100-104	T-37 HOSE CONNECTION AT TANK	VISUAL
OE-A37	2"	HOSECONN	TF1 HOSE PIT - T-33	642-4100-106	T-33 LINE 2" HOSE CONNECTION	VISUAL
OE-A38	2"	HOSECONN	T-49 INLET/OUTLET LINE	642-4100-105	T-49 HOSE CONNECTION AT TANK	VISUAL
OE-A39	1/2"	OPEN END	TF1 HOSE PIT - T-43	642-4100-106	T-43 1/2" LINE AT HOSE PIT	VISUAL
OE-A40	1/2"	OPEN END	4" WW-1231-A	642-4100-103	HOSE CONN.DRAIN	VISUAL
OE-A41	2"	HOSECONN	T-57 HOSE CONNECTION	642-4100-101	T-57 HOSE CONNECTION AT TANK	VISUAL
OE-A42	2"	HOSECONN	T-64 HOSE CONNECTION	642-4100-101	T-64 HOSE CONNECTION AT TANK	VISUAL
OE-A43	2"	HOSECONN	T-67 HOSE CONNECTION	642-4100-101	T-67 HOSE CONNECTION AT TANK	VISUAL
OE-A44	1'	HOSECONN	TF1 Hose Pit - L2 Feed Line	642-4100-106	L2 Feed Line Hose Connection	VISUAL
OE-A45	1/2"	OPEN END	3" PS-1004-A	642-4100-103	M/S UNL. PUMP T/T#1 DRAIN	VISUAL
OE-A46	1/2"	OPEN END	4" WW-1232-A	642-4100-102	N.END E.SLUDGE LINE DRAIN	VISUAL
OE-A47	1/2"	OPEN END	TF1 Hose Pit - L2 Feed Line	642-4100-106	L2 Feed Line Drain	VISUAL
OE-A48	3/4"	OPEN END	T-36 OUTLET CONE TOP	642-4100-102	T-36 SAMPLE LINE	VISUAL
OE-A49	3/4"	OPEN END	T-32 OUTLET CONE TOP	642-4100-102	T-32 SAMPLE LINE	VISUAL
OE-A50	2"	HOSECONN	TF1 HOSE PIT - T-41	642-4100-106	T-41 LINE 2" HOSE CONNECTION	VISUAL
OE-A51	1/2"	OPEN END	TF1 HOSE PIT - T-41	642-4100-106	T-41 LINE 1/2" OPEN END DRAIN	VISUAL
OE-A52	2"	HOSECONN	TF1 HOSE PIT - T-40	642-4100-106	T-40 LINE 2" HOSE CONNECTION	VISUAL
OE-A53	1/2"	OPEN END	TF1 HOSE PIT - T-40	642-4100-106	T-40 LINE 1/2" OPEN END DRAIN	VISUAL
OE-A54	2"	HOSECONN	TF1 HOSE PIT - T-39	642-4100-106	T-39 LINE 2" HOSE CONNECTION	VISUAL
OE-A55	1/2"	OPEN END	TF1 HOSE PIT - T-39	642-4100-106	T-39 LINE 1/2" OPEN END DRAIN	VISUAL
OE-A56	2"	HOSECONN	T-35 INLET/OUTLET LINE	642-4100-102	T-35 HOSE CONNECTION AT TANK	VISUAL
OE-A57	1"	HOSECONN	TF1 Hose Pit - L2 Ovh Line	642-4100-106	L2 Ovh Line Hose Connection	VISUAL
OE-A58	3/4"	OPEN END	T-35 OUTLET CONE TOP	642-4100-102	T-35 SAMPLE LINE	VISUAL
OE-A59	2"	OPEN END	T-45 LINE ON CONE	642-4100-104	T-45 2" LINE ON CONE	VISUAL
OE-A60	3/4"	OPEN END	T-42 OUTLET CONE TOP	642-4100-103	T-42 SAMPLE LINE	VISUAL
OE-A61	1"	OPEN END	T-44 OUTLET CONE TOP	642-4100-103	T-44 SAMPLE LINE	VISUAL
OE-A62	3/4"	OPEN END	T-43 OUTLET CONE TOP	642-4100-103	T-43 SAMPLE LINE	VISUAL
OE-A63	3/4"	OPEN END	T-66 SAMPLE LINE	642-4100-101	T-66 SAMPLE LINE	VISUAL
OE-A64	3	HOSECONN	3" PS-1004-A	642-4100-103	M/S UNL. PUMP T/T#1	VISUAL
OE-A65	3/4"	DRAIN	3" PS-1004-A	642-4100-103	M/S UNL. PUMP T/T#1	VISUAL
OE-A66	1"	OPEN END	FUEL HOSE DRAIN	642-4100-101	FUEL TRUCK LOAD HOSE DRAIN	VISUAL

Example Difficult to Monitor List/Tags

REMARKS	SIZE	ITEM #	TYPE	LINE #/LOCATION	P&ID	DISCRIPTION	DETECT# METHOD
Difficult To Monitor	3"	V-A127	F.L. CK	3" PS-1096-A-H	642-4100-104	T-37	EPA-21
Difficult To Monitor	3"	V-A128F	GATE	3" PS-1096-A-H	642-4100-104	T-37	EPA-21
Difficult To Monitor	3"	V-A163	F.L. CK	2" PS-1132-A-H	642-4100-105	T-48A	EPA-21
Difficult To Monitor	3"	V-A166	F.L. CK	3" PS-1117-A-H	642-4100-105	T-48A	EPA-21
Difficult To Monitor	2"	V-A208F	CHECK	3" PS-1191-A	642-4100-101	LUWA BOTTOMS TO T-67 CHECK	EPA-21
Difficult To Monitor	3"	V-C20F	GATE	3" PS-2009-A-H1-E	642-4200-100	T-88	EPA-21
Difficult To Monitor	3"	V-C30F	GATE	3" PS-2010-A-H1-E	642-4200-100	T-89A	EPA-21
Difficult To Monitor	3"	V-C109F	GATE	3" PS-2040-A-H1-E	642-4200-102	T-92A	EPA-21
Difficult To Monitor	2"	V-E18	BALL	2" PS-2806-A-H1-E	642-4400-100	T-203	EPA-21
Difficult To Monitor	2"	V-E19	BALL	2" PS-2807-A-H1-E	642-4400-100	T-204	EPA-21
Difficult To Monitor	2"	V-E20	BALL	2" PS-2808-A-H1-E	642-4400-100	T-205	EPA-21
Difficult To Monitor	2"	V-E21	BALL	2" PS-2809-A-H1-E	642-4400-100	T-209	EPA-21
Difficult To Monitor	2"	V-J44	BALL	PUMPING LINE TO T-91	642-7200-100	VALVE IN RACK OUTSIDE	EPA-21
Difficult To Monitor	2"	V-J45	BALL	PUMPING LINE TO T-209	642-7200-100	VALVE IN RACK OUTSIDE	EPA-21
Difficult To Monitor	2"	V-J46	BALL	PUMPING LINE TO T-92A	642-7200-100	VALVE IN RACK OUTSIDE	EPA-21
Difficult To Monitor	2"	V-J47	BALL	PUMPING LINE TO T-204	642-7200-100	VALVE IN RACK OUTSIDE	EPA-21
Difficult To Monitor	2"	V-J48	BALL	PUMPING LINE TO T-87	642-7200-100	VALVE IN RACK OUTSIDE	EPA-21
Difficult To Monitor	2"	V-J49	BALL	PUMPING LINE TO T-203	642-7200-100	VALVE IN RACK OUTSIDE	EPA-21
Difficult To Monitor	2"	V-J50	BALL	PUMPING LINE TO T-88	642-7200-100	VALVE IN RACK OUTSIDE	EPA-21
Difficult To Monitor	2"	V-J51	BALL	PUMPING LINE TO T-205	642-7200-100	VALVE IN RACK OUTSIDE	EPA-21

Attachment B

Example Monitoring Report

Clean Harbors Recycling Services of Ohio
Example Federal Equipment Leaks Standard
Monitoring Report

Page 1

Date of Inspection: _____ Time: _____

Inspector (Print) _____

Signature: _____

Title: _____

Was There A Leak Detected? ☐ Yes ☐ No

Comments:

1st Pass Monitoring Inspection

Work Order #	Previous Leaks Detected	P&ID #	Date	OK/NA

Clean Harbors Recycling Services of Ohio, LLC
Example Federal Equipment Leaks Standard
Monitoring Report

Page 2

Date of Inspection: _____ Time: _____

Inspector (Print) _____

Signature: _____

Title: _____

Was There A Leak Detected? ☐ Yes ☐ No

Comments:

2nd Pass Monitoring Inspection

Work Order #	Previous Leaks Detected	P&ID #	Date	OK/NA

Clean Harbors Recyclijng Services of Ohio, LLC
Example Federal Equipment Leaks Standard Monitoring Report

Page 3

Date of Inspection: _____ Time: _____

Inspector (Print) _____

Signature: _____

Title: _____

Was There A Leak Detected? ☐ Yes ☐ No

Comments:

3rd Pass Monitoring Inspection

Work Order #	Previous Leaks Detected	P&ID #	Date	OK/NA

Clean Harbors Recycling Services of Ohio, LLC
Example Federal Equipment Leaks Standard
Monitoring Report

Page 4

Date of Inspection: _____ Time: _____

Inspector (Print) _____

Signature: _____

Title: _____

Was There A Leak Detected? ☐ Yes ☐ No

Comments:

Monthly Monitoring Inspection

Equipment Type	Equipment Name	Location	P&ID #	Date	OK/NA

Pressure Relief Devices

Device Type	Device Name	Location	P&ID #	Date	OK/NA

Attachment C

MSA Calibrating

Clean Harbors Recycling Services of Ohio, LLC
Example Federal Equipment Leaks Standard
Monitoring Report

MSA / PID Performance Evaluation

Instrument: MSA Passport PID II Organic Vapor Monitor, S/N: PPII 00914
Calibration Precision: Per Method 21, section 4.4.1 (do every 3 months, per Method 21, 4.4.2, must be <10%))
Response Time: Per Method 21, 4.4.3. (repeat when pump or flow configuration may be changed, must be <30 sec.)

DATE OF PERFORMANCE EVALUATION	PRINT NAME	SIGNATURE	RESULTS

PLEASE KEEP CALIBRATION LOG WITH THE YEARS MONITORING REPORTS.

Clean Harbors Recycling Services of Ohio, LLC
Example Federal Equipment Leaks Standard Monitoring Report

MSA / PID Performance Evaluation

Instrument: MSA Passport PID II Organic Vapor Monitor, S/N: PPII 00914
Calibration Precision: Per Method 21, section 4.4.1 (do every 3 months, per Method 21, 4.4.2, must be <10%))
Response Time: Per Method 21, 4.4.3. (repeat when pump or flow configuration may be changed, must be <30 sec.)

Calibration Precision:

1. Calibrate instrument with calibration gas.
2. Start instrument.
3. When instrument reads less than 1 ppm, introduce calibration gas.
4. Take reading when reading is stabilized (about 90 secs.)
5. Disconnect calibration gas, and allow reading return to near zero.
6. Repeat 3, 4, and 5 two more times.
7. Add the 3 readings and deduct from 3x the value of calibration gas.
8. Divide this difference by 3, and the value of the calibration gas, and multiply by 100%
9. Result must be less than or equal to 10%.
10. Report on log sheet.

Example: Cal. gas = 100 ppm. 1st reading = 99.8 ppm, 2nd reading = 99.0 ppm, 3rd reading = 100.1 ppm.

$$\text{Calibration Precision} = \frac{\{(99.8 + 99.0 + 100.1) - (3)(100)\}}{(3)(100)} (100\%) = 0.4\%$$

Response Time:

1. Calibrate instrument with calibration gas.
2. Start instrument.
3. When instrument reads less than 1 ppm, introduce calibration gas.
4. As soon as calibration gas starts to flow in flow indicator on regulator, start timing.
5. Watch meter reading. When reading is 90% of calibration gas value, note time elapsed.
6. Disconnect calibration gas, and allow reading return to near zero.
7. Repeat 4, 5, and 6 two more times.
8. Average the three times. Must be 30 seconds or less.
9. Report on log sheet.

Example:

Sample Gas = 100 ppm. Measure time from reading at ~ 0 ppm to 90 ppm.
1st reading = 27.3 seconds, 2nd reading = 26.4 seconds, 3rd reading = 28.0 seconds

Response Time = (27.3 + 26.4 + 28.0) / 3 = 27.2 seconds

Additional recordkeeping requirements from the Subpart BB Air Emission Standard

A. The following information pertaining to all equipment subject to the requirements of this standard shall be recorded:
    1. A list of identification numbers for equipment (except welded fittings) subject to the requirements of Subpart BB.
    2. A list of identification numbers for equipment that the has been designated as having "No detectable emissions".
    3. A list of equipment identification numbers for pressure relief devices.
    4. The dates of each compliance test required, the background level measured during each test and the maximum instrument reading measured at the equipment during each test.
    5. A list of identification numbers for equipment in vacuum service.

B. The following information pertaining to all valves subject to the requirements of this standard shall be recorded:
    1. A list of identification numbers for valves that are designated as unsafe to monitor, an explanation for each valve stating why the valve is unsafe to monitor and the plan for monitoring each valve.
    2. A list of identification numbers for valves that are designated as difficult to monitor, an explanation for each valve stating why the valve is difficult to monitor and the planned schedule for monitoring each valve.

SECTION 15

SUBPART CC - AIR EMISSION STANDARDS FOR TANKS, SURFACE IMPOUNDMENTS, AND CONTAINERS

1. INTRODUCTION

Clean Harbors Recycling Services of Ohio, LLC is an organic chemical and solvent recycling facility located at 581 Milliken Drive, S.E., Hebron, Ohio. The Hebron Recycle Center receives, stores and recycle/recovers a wide range of organic waste materials that are listed on the Hazardous Waste Permit Information Form found in Section 1 of the Part B Permit Application.

The Hebron facility is operating as a RCRA TSD facility under a Part B Permit issued by the Ohio Environmental Protection Agency on June 30, 1998.

2. APPLICABILITY – TANKS, SURFACE IMPOUNDMENTS, AND CONTAINERS REGULATIONS

The Hebron Recycle Center manages various organic chemicals and solvents ranging in concentration up to 100% by weight. Safety-Kleen shall control air pollutant emissions from applicable hazardous waste management units at the Hebron Facility, which is subject to the TSD facility standards pursuant to the requirements of RCRA Subpart CC, through implementation of this compliance program.

The tanks and containers are also subject to the requirements of 40 CFR 63.685, 687, and 688 (Subpart DD – National Emission Standards for Hazardous Pollutants from Off-Site Waste and Recovery Operations). As per 264.1080(b)(7),

> A hazardous waste management unit that the owner or operator certifies is equipped with and operating air emission controls in accordance with the requirements of an applicable Clean Air Act regulation codified under 40 CFR part 60, part 61, or part 63. For the purpose of complying with this paragraph, a tank for which the air emission control includes an enclosure, as opposed to a cover, must be in compliance with the enclosure and control device requirements of §264.1084(i), except as provided in §264.1082(c)(5).

the requirements of 40 CFR 264 Subpart CC would not apply as the facility is currently complying with the requirements of 40 CFR 63.685, 687, and 688.

Using knowledge of the waste, based upon information included in manifests, shipping papers, or waste certification notices prepared by generators to confirm waste acceptability on-site or for an off-site receiving facility, it has been determined that all hazardous waste managed in tanks or applicable containers at this facility may contain an average volatile organic concentration of greater than 500 ppmw at the point of waste origination. Therefore, all hazardous wastes managed in tanks or applicable containers shall be managed in accordance with applicable Subpart DD control standards.

3. STANDARDS FOR TANKS, SURFACE IMPOUNDMENTS, AND CONTAINERS

Clean Harbors Recycling Services of Ohio, LLC has implemented the requirements found in 40 CFR 63.685, 687, and 688.

63.685 Standards: Tanks

Tanks used to manage hazardous waste with 500 ppmw or greater VO concentration are subject to either Level 1 or 2 controls.

Provided below is a summary of the criteria that must be meet in order for a hazardous waste tank to be subject to Level 1 controls. Tanks operated outside of these parameters are subject to Level 2 controls.

Level 1 Tanks

Tank Capacity	Maximum Vapor Pressure
> 151 m^3 (39,800 gal)	< 5.2 kPa (0.76 psia)
>75 m^3 (19,800 gal) <151 m^3 (39,800 gal)	< 27.6 kPa (4.05 psia)
< 75 m^3 (19,800 gal)	< 76.6 kPa (11.26 psia)

Level 1 Tanks:

The owner or operator shall determine the maximum HAP vapor pressure for an off-site material to be managed in the tank using Tank Level 1 controls before the first time the offsite material is placed in the tank.

The majority of tanks used to store hazardous waste at Hebron are used to manage organic halogenated and non-halogenated solvents This includes dry cleaning solvents. Vapor pressure testing performed on these materials in a product form identifies the following:

Material	Temperature (Deg F)	Vapor Pressure (kPa)
Mineral Spirits	68	0.27
Perchloroethylene	68	1.87
Methylene Chloride	68	46.65
1,1,1 Trichloroethylene	68	13.3
N-Methyl Pyrrolidone	68	0.04

Additionally, the facility also uses tanks to store hazardous waste derived fuel. Because the waste fuel is a mixture of different components, USEPA Tanks Program 4.0 was used to identify maximum vapor pressure. The maximum vapor pressure of the waste fuel managed on-site is 16.8 kPa (2.43 psia).

The owner or operator shall control air emissions from the tank using a fixed-roof in accordance with the provisions specified in 40 CFR 63 subpart OO—National Emission Standards for Tanks—Level 1.

63.902 Standards: Tank fixed roof

Requirements –

1. The fixed roof and its closure devices shall be designed to form a continuous barrier over the entire surface area of the liquid in the tank. The fixed roof may be a separate cover installed on the tank (e.g., a removable cover mounted on an open-top tank) or may be an integral part of the tank structural design (e.g., a horizontal cylindrical tank equipped with a hatch).
2. The fixed roof shall be installed in a manner such that there are no visible cracks, holes, gaps, or other open spaces between roof section joints or between the interface of the roof edge and the tank wall.
3. Each opening in the fixed roof shall be equipped with a closure device designed to operate such that when the closure device is secured in the closed

position there are no visible cracks, holes, gaps, or other open spaces in the closure device or between the perimeter of the opening and the closure device.

4. The fixed roof and its closure devices shall be made of suitable materials that will minimize exposure of the regulated-material to the atmosphere, to the extent practical, and will maintain the integrity of the equipment throughout its intended service life.
5. Whenever a regulated-material is in the tank, the fixed roof shall be installed with each closure device secured in the closed position except as follows: To provide access to the tank for performing routine inspection, maintenance, or other activities needed for normal operations; To remove accumulated sludge or other residues from the bottom of tank; Opening of a spring-loaded pressure-vacuum relief valve, conservation vent, or similar type of pressure relief device which vents to the atmosphere during normal operations for the purpose of maintaining the tank internal pressure in accordance with the tank design specifications; Opening of a safety device, as defined in § 63.901 of this subpart, is allowed at any time conditions require it to do so to avoid an unsafe condition.

63.906 Inspection and Monitoring Requirements

1. The fixed roof and its closure devices shall be visually inspected by the owner or operator to check for defects that could result in air emissions. Defects include, but are not limited to, visible cracks, holes, or gaps in the roof sections or between the roof and the tank wall; broken, cracked, or otherwise damaged seals or gaskets on closure devices; and broken or missing hatches, access covers, caps, or other closure devices.
2. The owner or operator shall perform the inspections following installation of the fixed roof and, thereafter, at least once every year.
3. The owner or operator shall maintain a record of the inspection in accordance with the requirements specified in § 63.907 (a) of this subpart.
4. In the event that a defect is detected, the owner or operator shall make first efforts at repair of the defect no later than 5 calendar days after detection and repair shall be completed as soon as possible but no later than 45 calendar days after detection except as noted in the next item.
5. Repair of a defect may be delayed beyond 45 calendar days if the owner or operator determines that repair of the defect requires emptying or temporary removal from service of the tank and no alternative tank capacity is available at the site to accept the regulated material normally managed in the tank. In this case, the owner or operator shall repair the defect the next time the process or unit that is generating the regulated-material managed in the tank stops operation. Repair of the defect shall be completed before the process or unit resumes operation.

63.907 Recordkeeping Requirements

Each owner or operator shall prepare and maintain a record for each tank that includes the following information:

1. A tank identification number (or other unique identification description as selected by the owner or operator).
2. A description of the tank dimensions and the tank design capacity.
3. The date that each inspection required by § 63.906 of this subpart is performed.

4. The owner or operator shall record the following information for each defect detected during inspections required by § 63.906 of this subpart: the location of the defect, a description of the defect, the date of detection, and corrective action taken to repair the defect. In the event that repair of the defect is delayed in accordance with the provisions of § 63.906(b)(2) of this section, the owner or operator shall also record the reason for the delay and the date that completion of repair of the defect is expected.

Level 2 Tanks:

All tanks managing hazardous waste that exceed the maximum vapor pressure for each applicable design capacity must meet Level 2 controls. Level 2 tanks must either be a fixed roof tank equipped with an internal floating roof, equipped with an external floating roof, a fixed roof tank vented to a control device in accordance with 63.685(g), a pressure tank designed and operated in accordance with the requirements specified in 63.685(h), or a tank located inside an enclosure that is vented through a closed-vent system to an enclosed combustion control device in accordance with the requirements specified in 63.685(i).

All the tanks at the Hebron Recycle Center have been determined to be Level 1 Tanks (Table 2 lists all the tanks at the facility operating with Level 1 controls). No tanks at the facility require the use of Level 2 controls.

63.687 Standards: Surface Impoundments
This standard is not applicable to the Hebron Recycle Center because hazardous waste is not managed in such units at the facility.

63.688 Standards: Containers
The owner or operator shall control air emissions from each container subject to this section in accordance with the following requirements, as applicable to the container, except when the special provisions for waste stabilization processes specified in paragraph (c) of this section apply to the container.

1. For a container having a design capacity greater than 0.1 m^3 and less than or equal to 0.46 m^3, the owner or operator shall control air emissions from the container in accordance with the standards for Container Level 1 controls as specified in 40 CFR 63 subpart PP—National Emission Standards for Containers.
2. For a container having a design capacity greater than 0.46 m^3 and the container is not in light-material service as defined in § 63.681 of this subpart, the owner or operator shall control air emissions from the container in accordance with the standards for Container Level 1 controls as specified in 40 CFR 63 subpart PP—National Emission Standards for Containers.
3. For a container having a design capacity greater than 0.46 m^3 and the container is in light-material service as defined in § 63.681 of this subpart, the owner or operator shall control air emissions from the container in accordance with the standards for Container Level 2 controls as specified in 40 CFR 63 subpart PP—National Emission Standards for Containers.
4. When a container subject to this subpart and having a design capacity greater than 0.1 m^3 is used for treatment of an off-site material by a waste stabilization process as defined in § 63.681 of this subpart, the owner or operator shall control air emissions from the container at those times during the process when the off-site material in container is exposed to the atmosphere in accordance with the

standards for Container Level 3 controls as specified in 40 CFR 63 subpart PP—National Emission Standards for Containers.

40 CFR 63 Subpart PP – National Standards for Containers

63.920 Applicability
The provisions of this subpart apply to the control of air emissions from containers for which another subpart of 40 CFR parts 60, 61, or 63 references the use of this subpart for such air emission control.

63.922 Standards: Container Level 1 Controls
A container using Container Level 1 controls is one of the following:

1. A container that meets the applicable U.S. Department of Transportation (DOT) regulations on packaging hazardous materials for transportation as specified in paragraph (f) of this section.
2. A container equipped with a cover and closure devices that form a continuous barrier over the container openings such that when the cover and closure devices are secured in the closed position there are no visible holes, gaps, or other open spaces into the interior of the container. The cover may be a separate cover installed on the container (e.g., a lid on a drum, a suitably secured tarp on a roll-off box) or may be an integral part of the container structural design (e.g., a bulk cargo container equipped with a screw type cap).
3. An open-top container in which an organic vapor-suppressing barrier is placed on or over the regulated-material in the container such that no regulated material is exposed to the atmosphere. One example of such a barrier is application of a suitable organic-vapor suppressing foam.

Requirements:

1. A container used to meet the requirements of either paragraph (b)(2) or (b)(3) of this section shall be equipped with covers and closure devices, as applicable to the container, that are composed of suitable materials to minimize exposure of the regulated-material to the atmosphere and to maintain the equipment integrity for as long as it is in service.
2. A regulated-material in a container using Container Level 1 controls must have covers and closure devices for the container, and secure and maintain each closure device in the closed position except when adding material, removing material, or to perform routine activities other than transfer of regulated material.
3. Opening of a spring-loaded pressure/vacuum relief valve, conservation vent, or similar type of pressure relief device which vents to the atmosphere is allowed during normal operations for the purpose of maintaining the container internal pressure in accordance with the container design specifications.
4. Opening of a safety device, as defined in § 63.921 of this subpart, is allowed at any time conditions require it to do so to avoid an unsafe condition.
5. For the purpose of compliance with paragraph (b)(1) of this section, containers shall be used that meet the applicable U.S. DOT regulations on packaging hazardous materials for transportation as follows:
   a. The container meets the applicable requirements specified in 49 CFR part 178—Specifications for Packagings or 49 CFR part 179—Specifications for Tank Cars.

b. Regulated-material is managed in the container in accordance with the applicable requirements specified in 49 CFR part 107 subpart B—Exemptions; 49 CFR part 172—Hazardous Materials Table, Special Provisions, Hazardous Materials Communications, Emergency Response Information, and Training Requirements; 49 CFR part 173—Shippers—General Requirements for Shipments and Packaging; and 49 CFR part 180—Continuing Qualification and Maintenance of Packagings.
c. For a lab pack that is managed in accordance with the requirements of 49 CFR part 178 for the purpose of complying with this subpart, an owner or operator may comply with the exceptions for those packagings specified in 49 CFR 173.12(b).

63.923 Standards: Container Level 2 Controls
A container using Container Level 2 controls is one of the following:

1. A container that meets the applicable U.S. Department of Transportation (DOT) regulations on packaging hazardous materials for transportation as specified in paragraph (f) of this section.
2. A container that has been demonstrated to operate with no detectable organic emissions as defined in § 63.921 of this subpart.
3. A container that has been demonstrated within the preceding 12 months to be vapor-tight by using Method 27 in Appendix A of 40 CFR part 60 in accordance with the procedure specified in § 63.925(b) of this subpart.

Requirements:

1. Transfer of regulated-material in to or out of a container using Container Level 2 controls shall be conducted in such a manner as to minimize exposure of the regulated-material to the atmosphere.
2. A container using Level 2 controls shall be equipped with covers and closure devices, as applicable to the container.
3. A regulated-material in a container using Container Level 2 controls must have covers and closure devices for the container, and secure and maintain each closure device in the closed position except when adding material, removing material, or to perform routine activities other than transfer of regulated material.
4. Opening of a spring-loaded pressure/vacuum relief valve, conservation vent, or similar type of pressure relief device which vents to the atmosphere is allowed during normal operations for the purpose of maintaining the container internal pressure in accordance with the container design specifications.
5. Opening of a safety device, as defined in § 63.921 of this subpart, is allowed at any time conditions require it to do so to avoid an unsafe condition.
6. For the purpose of compliance with paragraph (b)(1) of this section, containers shall be used that meet the applicable U.S. DOT regulations on packaging hazardous materials for transportation as follows:
   a. The container meets the applicable requirements specified in 49 CFR part 178—Specifications for Packagings or 49 CFR part 179—Specifications for Tank Cars.
   b. Regulated-material is managed in the container in accordance with the applicable requirements specified in 49 CFR part 107 subpart B—Exemptions; 49 CFR part 172—Hazardous Materials Table, Special Provisions, Hazardous Materials Communications, Emergency Response

Information, and Training Requirements; 49 CFR part 173—Shippers—General Requirements for Shipments and Packaging; and 49 CFR part 180—Continuing Qualification and Maintenance of Packagings.

c. For a lab pack that is managed in accordance with the requirements of 49 CFR part 178 for the purpose of complying with this subpart, an owner or operator may comply with the exceptions for those packagings specified in 49 CFR 173.12(b).

63.924 Standards: Container Level 3 Controls

A container using Container Level 3 controls is one of the following:

1. A container that is vented directly through a closed-vent system to a control device in accordance with the requirements of paragraphs (c)(2) of this section.
2. A container that is vented inside an enclosure which is exhausted through a closed-vent system to a control device in accordance with the requirements of paragraphs (c)(1) and (c)(2) of this section.
3. The owner or operator shall meet the following requirements as applicable to the type of air emission control equipment selected by the owner or operator:
   a. The enclosure shall be designed and operated in accordance with the criteria for a permanent total enclosure as specified in "Procedure T—Criteria for and Verification of a Permanent or Temporary Total Enclosure" under 40 CFR 52.741, Appendix B.
   b. The closed-vent system and control device shall be designed and operated in accordance with the requirements of 40 CFR 63.692.
4. Safety devices, as defined in § 63.921 of this subpart, may be installed and operated as necessary on any container, enclosure, closed-vent system, or control device used to comply with this section.

63.925 Test methods and Procedures

Procedure for determining no detectable organic emissions for the purpose of complying with of this subpart.

1. The test shall be conducted in accordance with the procedures specified in Method 21 of 40 CFR part 60, appendix A.
2. The test shall be performed when the container filled with a material having an organic HAP concentration representative of the range of concentrations for the regulated-materials expected to be managed in this type of container.
3. The detection instrument shall meet the performance criteria of Method 21 of 40 CFR part 60, appendix A, except the instrument response factor criteria in section 3.1.2(a) of Method 21 shall be for the average composition of the organic constituents in the material placed in the container, not for each individual organic constituent.
4. The detection instrument shall be calibrated before use on each day of its use by the procedures specified in Method 21 of 40 CFR part 60, appendix A.
5. Calibration gases shall be as follows: zero air (less than 10 ppmv hydrocarbon in air); and a mixture of methane in air at a concentration of approximately, but less than 10,000 ppmv.
6. The background level shall be determined according to the procedures in Method 21 of 40 CFR part 60 appendix A.
7. Each potential leak interface shall be checked by traversing the instrument probe around the potential leak interface as close to the interface as possible, as described in Method 21.

8. The arithmetic difference between the maximum organic concentration indicated by the instrument and the background level shall be compared with the value of 500 ppmv.

Procedure for determining a container to be vapor-tight for the purpose of complying with this subpart.

1. The test shall be performed in accordance with Method 27 of 40 CFR part 60, appendix A of this chapter.
2. A pressure measurement device shall be used that has a precision of $\pm$ 2.5 mm water and that is capable of measuring above the pressure at which the container is to be tested for vapor tightness.
3. If the test results determined by Method 27 indicate that the container sustains a pressure change less than or equal to 750 Pascals within 5 minutes after it is pressurized to a minimum of 4,500 Pascals, then the container is determined to be vapor-tight.

63.926 Inspection and Monitoring Requirements

Owners and operators of containers using either Container Level 1 or Container Level 2 controls in accordance with the provisions of §§ 63.922 and 63.923 of this subpart, respectively, shall inspect the container and its cover and closure devices as follows:

1. In the case when a regulated-material already is in the container at the time the owner or operator first accepts possession of the container at the facility site and the container is not emptied (i.e., does not meet the conditions for an empty container) within 24 hours after the container arrives at the facility site, the container and its cover and closure devices shall be visually inspected by the owner or operator to check for visible cracks, holes, gaps, or other open spaces into the interior of the container when the cover and closure devices are secured in the closed position.
2. In the case when a container used for managing regulated-material remains at the facility site for a period of 1 year or more, the container and its cover and closure devices shall be visually inspected by the owner or operator initially and thereafter, at least once every 12 months, to check for visible cracks, holes, gaps, or other open spaces into the interior of the container when the cover and closure devices are secured in the closed position.
3. When a defect is detected for the container, cover, or closure devices, the owner or operator shall make first efforts at repair of the defect no later than 24 hours after detection and repair shall be completed as soon as possible but no later than 5 calendar days after detection. If repair of a defect cannot be completed within 5 calendar days, then the regulated-material shall be removed from the container and the container shall not be used to manage regulated-material until the defect is repaired.

Owners and operators using Container Level 3 controls in accordance with the provisions of § 63.924 of this subpart shall inspect and monitor the closed-vent systems and control devices in accordance with the requirements of § 63.693 in 40 CFR Part 63, subpart DD—National Emission Standards for Hazardous Air Pollutants from Off-Site Waste and Recovery Operations.

63.927 Recordkeeping Requirements
Owners and operators that use Container Level 3 controls in accordance with the provisions of § 63.924 of this subpart shall prepare and maintain the following records:

1. Records for the most recent set of calculations and measurements performed by the owner or operator to verify that the enclosure meets the criteria of a permanent total enclosure as specified in "Procedure T—Criteria for and Verification of a Permanent or Temporary Total Enclosure" under 40 CFR 52.741, Appendix B.
2. Records required for the closed vent system and control device in accordance with the requirements of § 63.693 in 40 CFR Part 63, subpart DD— National Emission Standards for Hazardous Air Pollutants from Off-Site Waste and Recovery Operations.

63.928 Reporting Requirements
For owners and operators that use Container Level 3 controls in accordance with the provisions of § 63.924 of this subpart, the owner or operator shall prepare and submit to the Administrator the reports required for closed vent systems and control devices in accordance with the requirements of § 63.693 in 40 CFR Part 63, subpart DD— National Emission Standards for Hazardous Air Pollutant Standards from Off-Site Waste and Recovery Operations.

TABLE 2

HAZARDOUS WASTE TANKS SUBJECT TO SUBPART CC

Tank	Volume (gal)	Height (ft)	Diameter (ft)	Max Vapor Pressure (kPa)	Tank Control Level
32	15,000	24.0	10.5	0.27	Level 1
33	15,000	24.0	10.5	0.27	Level 1
34	15,000	24.0	10.5	0.27	Level 1
35	15,000	24.0	10.5	0.27	Level 1
36	15,000	24.0	10.5	0.27	Level 1
37	15,000	24.0	10.5	0.27	Level 1
39	15,000	24.0	10.5	0.27	Level 1
40	15,000	24.0	10.5	0.27	Level 1
41	15,000	24.0	10.5	0.27	Level 1
42	15,000	24.0	10.5	0.27	Level 1
43	15,000	24.0	10.5	0.27	Level 1
44	15,000	24.0	10.5	0.27	Level 1
45	15,000	24.0	10.5	0.27	Level 1
63	15,000	24.0	10.5	N/A	Currently WWT Tank
67	30,000	35.0	12.0	0.27	Level 1
83A	7,500	11.0	10.5	47.0	Level 1
83B	7,500	13.0	10.5	47.0	Level 1
84A	7,500	11.0	10.5	47.0	Level 1
84B	7,500	13.0	10.5	47.0	Level 1
86	15,000	24.0	10.5	47.0	Level 1
87	15,000	24.0	10.5	47.0	Level 1
88	15,000	24.0	10.5	47.0	Level 1
89A	7,500	11.0	10.5	47.0	Level 1
89B	7,500	13.0	10.5	47.0	Level 1
91	15,000	24.0	10.5	47.0	Level 1
92A	7,500	11.0	10.5	47.0	Level 1
92B	7,500	13.0	10.5	47.0	Level 1
94A	7,500	11.0	10.5	47.0	Level 1
94B	7,500	13.0	10.5	47.0	Level 1
96	12,000	17.0	11.0	17.0	Level 1
97	20,000	24.5	12.0	17.0	Level 1
98	20,000	32.0	10.5	17.0	Level 1
102A	7,500	11.0	10.5	47.0	Level 1
102B	7,500	13.0	10.5	47.0	Level 1
203	15,000	24.0	10.5	47.0	Level 1
204	15,000	24.0	10.5	47.0	Level 1
205	15,000	24.0	10.5	47.0	Level 1
209	15,000	24.0	10.5	47.0	Level 1

RCRA HAZARDOUS WASTE FACILITY OPERATING PERMIT PART B APPLICATION

Clean Harbors Recycling Services of Ohio, LLC

Hebron, OH

EPA ID No. OHD 980 587 364

CleanHarbors®

December 2014

Volume II

RCRA HAZARDOUS WASTE FACILITY OPERATING PERMIT PART B APPLICATION

Clean Harbors Recycling Services of Ohio, LLC

Hebron, OH

EPA ID No. OHD 980 587 364

CleanHarbors®

December 2014

Volume II

Exhibit List

Exhibit No.	Description	Drawing No.
1	U.S.G.S. Map	90-64200-007
1A	Zoning Map	02-64200-001
2	Facility Site Plan	90-64200-002
2A	Facility Site Plan	Removed
3	Proposed Site Plan	Removed
4	Fire Protection System	90-64200-009
5	Existing Facility Traffic Flow, Emergency Equipment Locations & Evacuation Routes	90-64200-004
7	Property Survey	90-64200-000
8	Former Site Plan	90-64200-010
9	Storm, Sanitary & Process Sewer & Systems Maps	90-64200-008
10	Floodplain Map	90-64200-006
11	Topographic Map of Hebron R/C	90-64200-003
12	15,000 Gal. Steel Lined Tank for Tank Nos. 32-37, 39-45, 56-58, 62, 63, 65, 66, 80-82, 85-88, 91, 93, 101, 105 &110	90-64200-151
13	20,000 Gal. Steel Tank No. 49, 50, 98	90-64200-152
14	15,000 Gal. Steel Piggy-Back Tank for Tank Nos. 48, 83, 84, 89, 92, 94 & 102	90-64200-153
15	30,000 Gal. Steel Tanks Nos. 51, 52 53, 59-60, 61, 67, 68 & 69; & Stainless Steel Tank Nos. 106, 107, 111 & 112	90-64200-154
16	15,000 Gal. Stainless Steel Tank Nos. 90, 95, 100, 103, 104, 108, 109, 113 & 114	90-64200-155
21	15,000 Gal. Carbon Steel Storage Tank Nos. 203, 204, 205 & 209	90-64200-160
22	12,000 Gal. Carbon Steel Storage Tank No. 96	Removed
23A	Container Storage No. 1 Concrete Construction Plan Sections & Details	90-64200-525
23B	Container Storage No. 1 Concrete Construction Plan Sections & Details	90-64200-526
23C	Container Storage No. 1 Drum Arrangement	90-64200-202
24A	Container Storage Area No. 2 Concrete Construction Layout	90-64200-527
24B	Container Storage Area No. 2 Concrete Construction Plan & Details	90-64200-521
24C	Container Storage Area No. 2 Drum Arrangement	90-64200-203
24D	Floor Elevations for Container Storage Areas 2B, 2D & 2E Containment Calculations	90-64200-541
26	Tank Farm No. 1 Concrete Construction Plan	90-64200-501
27	West Section of Tank Farm No. 1 Concrete Construction Plan	90-64200-502
28	Tank Farm No. 1 Sections and Details	88-64200-503
29	Tank Farm No. 2 Concrete Construction Plan	90-64200-504
30	Tank Farm No. 2 Hose Connection Pit Concrete Plan Sections & Details	90-64200-507
31	Tank Farm No. 3 Concrete Construction Plan	90-64200-505
32	Concrete Construction Details for Tank Farms No. 1, 2 & 3	90-64200-506
33	Tank Farm No. 4 Concrete Construction Plan, Section & Details	90-64200-508
35	Tank Farm No. 6 Concrete Construction Plan, Section & Details	90-64200-510
36	Tank Farm No. 4 Misc. Solvent Fuels Process Flow Diagram	90-64200-400
40A	Truck Station No. 1 Concrete Construction Plan & Details	90-64200-530
40B	Truck Station No. 1 Sections & Details	90-64200-531
40C	Truck Station No. 1 Alternate Drum Storage with Containment Calculations	90-64200-204
41A	Truck Station No. 2 Concrete Construction Drawing	90-64200-532
41B	Truck Station No. 2 Sections & Details	90-64200-529

Exhibit List

Exhibit No.	Description	Drawing No.
41C	Truck Station No. 2 Plan Sections & Details	90-64200-534
41D	Truck Station No. 2 Alternate Drum Storage with Containment Calculations	90-64200-205
42	Truck Station No. 4 Concrete Construction Drawing	90-64200-535
43	Truck Station No. 5 Concrete Construction Drawing	90-64200-536
45A	Solids Handling System Process Flow Diagram	90-64200-118
45B	FRS Drum Handling System Process Flow Diagram	90-64200-700
46A	Tank Farm No. 1 Used Solvents Process Flow Diagram, 1 of 2	90-64200-102
46B	Tank Farm No. 1 Used Solvents Process Flow Diagram, 2 of 2	90-64200-103
46C	Tank Farm No. 1 Miscellaneous Function Process Flow Diagram, 1 of 2	90-64200-105
46D	Tank Farm No. 1 Miscellaneous Function Process Flow Diagram, 2 of 2	90-64200-104
46E	Tank Farm No. 1 Clean Solvent Process Flow Diagram, 1 of 2	90-64200-100
46F	Tank Farm No. 1 Clean Solvent Process Flow Diagram, 2 of 2	90-64200-101
46G	Tank Farm No. 1 Hose Station Flow Diagram	90-64200-106
47A	Tank Farm No. 2 Cooker Pit Area Process Flow Diagram	90-64200-200
47B	Tank Farm No. 2 LUWA Pit Area Process Flow Diagram, 1 of 2	90-64200-201
47C	Tank Farm No. 2 LUWA Pit Area Process Flow Diagram, 2 of 2	90-64200-202
47D	Tank Farm No. 2 Column Pit Area Process Flow Diagram, 2 of 2	90-64200-206
47E	Tank Farm No. 2 Column Pit Area Process Flow Diagram, 1 of 2	90-64200-205
47F	Tank Farm No. 2 Q/C Tank Pit Area Process Flow Diagram	90-64200-207
48A	Tank Farm No. 3 Methylene Chloride Finished Product Process Flow Diagram	90-64200-301
48B	Tank Farm No. 3 Industrial Perchloroethylene Finished Product Process Flow Diagram	90-64200-302
48C	Tank Farm No. 3 Dry Cleaner Perchloroethane Finished Product Process Flow Diagram	90-64200-303
48D	Tank Farm No. 3 1, 1, 1 Trichloroethane Finished Product Process Flow Diagram	90-64200-304
48E	Tank Farm No. 3 Trichloroethylene Finished Product Process Flow Diagram	90-64200-305
48F	Tank Farm No. 3 Misc Solvent Finished Product Process Flow Diagram	90-64200-306
50	P & ID Tank Farm No. 6 & Truck Station No. 1	90-64200-135
51	20,000 Gal. Carbon Steel Tank No. 97	Removed
54	Tank Farm No. 1 Well Water Process Flow Diagram	92-64200-134
57	Assembly - Ground Product Storage Bin (Bin #2, Tank Farm #6)	R-67801

U.S. DEPARTMENT OF THE INTERIOR
U. S. GEOLOGICAL SURVEY

The National Map US Topo

THORNVILLE QUADRANGLE
OHIO
7.5-MINUTE SERIES

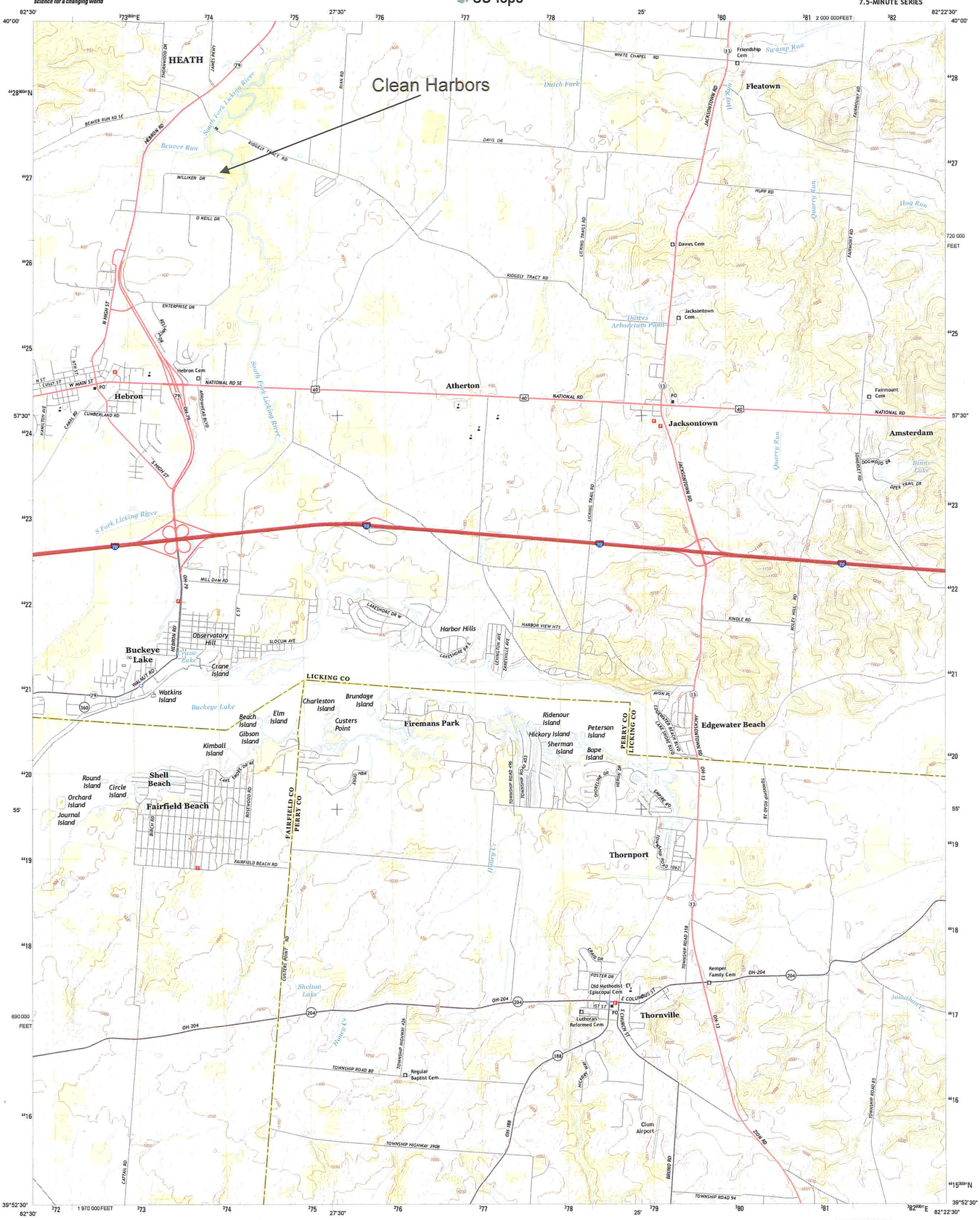

Produced by the United States Geological Survey
North American Datum of 1983 (NAD83)
World Geodetic System of 1984 (WGS84). Projection and
1 000-meter grid: Universal Transverse Mercator, Zone 17S
10 000-foot ticks: Ohio Coordinate System of 1983 (south zone)

This map is not a legal document. Boundaries may be generalized for this map scale. Private lands within government reservations may not be shown. Obtain permission before entering private lands.

Imagery.....NAIP, October 2011
Roads.....©2006-2013 TomTom
Names.....GNIS, 2013
Hydrography.....National Hydrography Dataset, 2011
Contours.....National Elevation Dataset, 2010
Boundaries.....Census, IBWC, BC, USGS, 1972 - 2012
Public Land Survey System.....BLM, 2013

MN
7° 22'
131 MILS
GN
0° 55'
16 MILS

UTM GRID AND 2013 MAGNETIC NORTH DECLINATION AT CENTER OF SHEET

U.S. National Grid
100,000-m Square ID
LE
Grid Zone Designation
17S

SCALE 1:24 000

KILOMETERS 1 0.5 0 1 2
METERS 1000 500 0 1000 2000
MILES 1 0.5 0 1
FEET 1000 0 1000 2000 3000 4000 5000 6000 7000 8000 9000 10000

CONTOUR INTERVAL 10 FEET
NORTH AMERICAN VERTICAL DATUM OF 1988

This map was produced to conform with the National Geospatial Program US Topo Product Standard, 2011.
A metadata file associated with this product is draft version 0.6.15

OHIO
QUADRANGLE LOCATION

Granville	Newark	Hanover
Millersport	Thornville	Glenford
Baltimore	Rushville	Somerset

ADJOINING 7.5 QUADRANGLES

ROAD CLASSIFICATION
Expressway
Secondary Hwy
Ramp
Local Connector
Local Road
4WD
Interstate Route
US Route
State Route

THORNVILLE, OH
2013

Exhibit 1

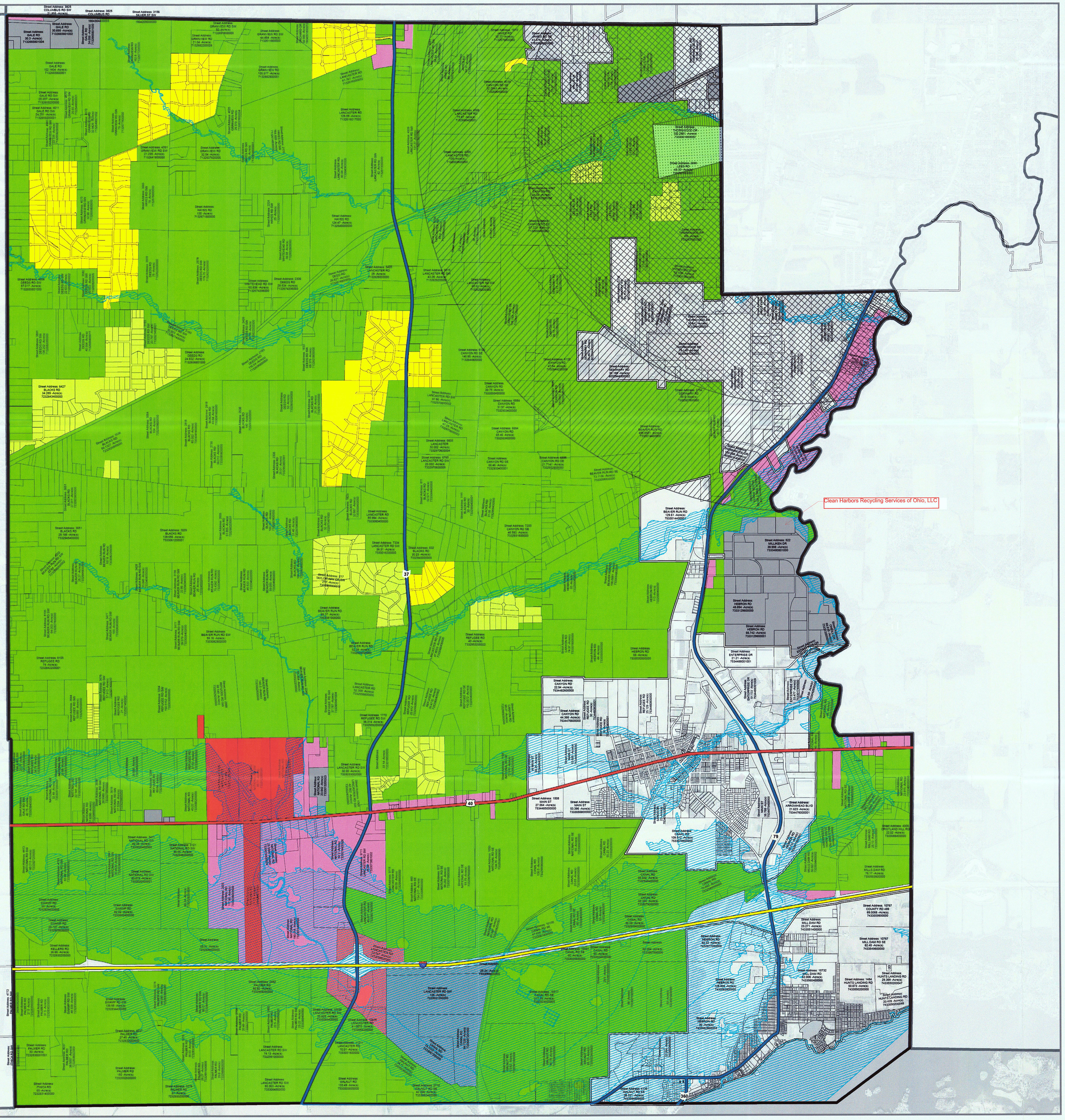

LICKING COUNTY PLANNING COMMISSION
20 South Second Street
Newark, OH 43055
tel 740.670.5200
fax 740.670.5197
lcounty.com/planning

UNION TOWNSHIP OFFICIAL ZONING MAP

LICKING COUNTY, UNION TOWNSHIP, OHIO

Townships

AHZ - Airport Hazard Zone Overlay District
- Primary Surface
- Approach Zone
- Transition Zone
- Horizontal Zone
- Conical Zone

FP - Floodplain Overlay District
- Floodplain

Union Township

Zoning Districts
- AG - Agriculture
- SER - Suburban Estate Residential
- R-3 - Medium Density Residetial
- RR-3 - Rural Residential-3
- RR-4 - Rural Residential-4
- MHP - Manufactured Home Park
- LB - Local Business
- GB - General Business
- AB - Accommodation Business
- PRO - Professional Research Office
- M-1 - Light Manufacturing
- M-2 - Heavy Manufacturing
- SE - Sports Entertainment

EXHIBIT 1A

ADOPTED DATE: _____

EFFECTIVE DATE: _____

Trustee _____ Date _____

Trustee _____ Date _____

Trustee _____ Date _____

Witness By Fiscal Officer _____ Date _____

0 1,200 Feet

Sources:
Parcels, Licking County Engineer, 03/14
Zoning District, Township Resolution

The information and features on this map have been compiled by Licking County staff from a variety of sources, and are subject to change without notice. Licking County makes no representations or warranties, expressed or implied, as to accuracy, completeness, timeliness, or rights to the use of such information.

H:\GIS\2012_Zoning_Maps\Union\Union_Zoning_Map.mxd

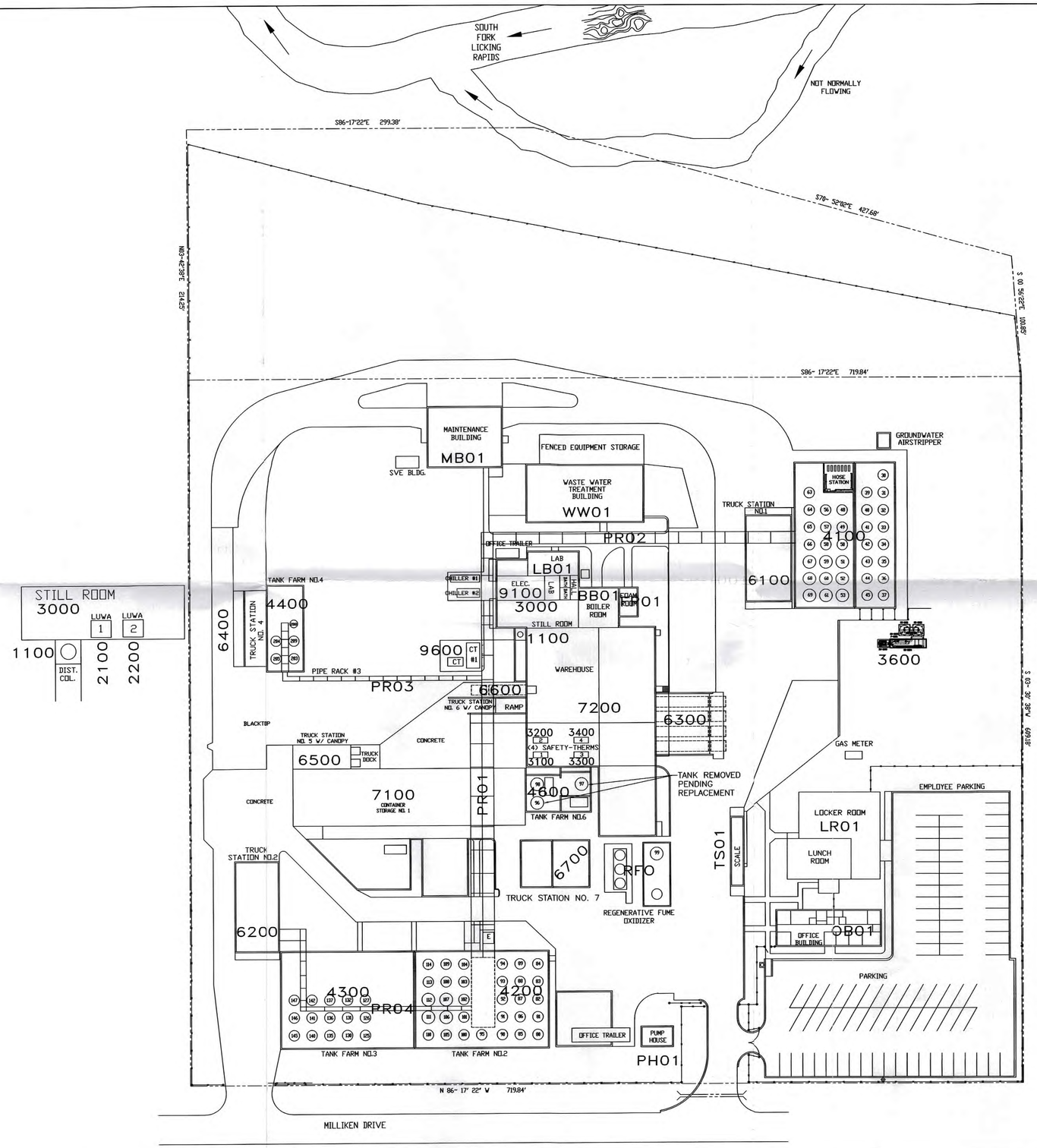

NOTES

PROCESS NUMBERING SYSTEM

1100	DISTILL. COLUMN NO.1
2100	LUWA NO. 1
2200	LUWA NO. 2
3000	STILL ROOM
3100	SAFETY–THERM NO. 1
3200	SAFETY–THERM NO. 2
3300	SAFETY–THERM NO. 3
3400	SAFETY–THERM NO. 4
3600	DEHYDRATION UNIT
4100	TANK FARM NO. 1
4200	TANK FARM NO. 2
4300	TANK FARM NO. 3
4400	TANK FARM NO. 4
4600	TANK FARM NO. 6
6100	TRUCK STATION NO. 1
6200	TRUCK STATION NO. 2
6300	TRUCK STATION NO. 3
6400	TRUCK STATION NO. 4
6500	TRUCK STATION NO. 5
6600	TRUCK STATION NO. 6
6700	TRUCK STATION NO. 7
7100	CONTAINER STORAGE AREA NO. 1
7200	CONTAINER STORAGE AREA NO. 2
9100	ELECTRICL ROOM
9600	COOLING WATER

FACILITY SUPPORT UNIT/AREA LETTERING SYSTEM

BB01	BOILER BUILDING
FP01	FIRE PROTECTION BUILDING
LB01	LABORATORY BUILDING
LR01	LOCKER ROOM
MB01	MAINTENANCE BUILDING
OB01	OFFICE BUILDING
PH01	PUMP HOUSE
PR01	PIPERACK
PR02	PIPERACK
PR03	PIPERACK
PR04	PIPERACK
RFO	REGENERATIVE FUME OXIDIZER
TS01	TRUCK SCALE
WW01	WASTE WATER TREATMENT BUILDING

CONTAINER STORAGE AREAS

STORAGE AREAS 2B, 2D, AND 2E ARE USED FOR STORAGE AND STAGING

STORAGE AREAS TS1 AND TS2 ARE USED FOR STORAGE ONLY

STORAGE AREAS 2C IS USED FOR STAGING ONLY

0 20 40 60 80 100

SCALE IN FEET

EXHIBIT 2

NO.	DESCRIPTION	CK.	PROJMGR APPR.	PROCESS APPR.	DATE
5	RCRA PERMIT RENEWAL UPDATES	KMC			04/09/15
4	RCRA PERMIT RENEWAL UPDATE	KMC			12/12/14
3	ADDED DEHYDRATION UNIT & TANK FARM 4100 HOSE STATION	KMC JWC	JWC		10/29/10
2	AS BUILT REVISION	GK			03/07/03
1	ADD RFO/ DELETE HYDRAP.	GK			06/05/00

REVISIONS

PROPRIETARY STATEMENT

THIS DRAWING IS THE EXCLUSIVE PROPERTY OF CLEAN HARBORS AND IS PROPRIETARY AND CONFIDENTIAL INFORMATION. THIS DRAWING AND THE INFORMATION CONTAINED THEREIN MUST NOT BE DUPLICATED, USED, DIVULGED, REPRODUCED, COPIED, DISCLOSED OR APPROPRIATED IN WHOLE OR IN PART FOR ANY PURPOSE OTHER THAN AS EXPRESSLY AUTHORIZED BY CLEAN HARBORS THIS DRAWING MUST BE RETURNED PROMPTLY UPON REQUEST.

FILENAME 624-SP01 EXHIBIT 2 Rev. 5

SITE PLAN

CleanHarbors
581 MILLIKEN DRIVE, HEBRON, OHIO 43025 PHONE (740) 929-3532

SCALE	DRAWN	CHECKED	APPR.	OPERATION APPR	DATE
1"=50'-0"	DARIN S.				6/21/94

RECYCLE CENTER LOCATION
HEBRON, OHIO

DRAWING NO. 624-SP01

REV 5

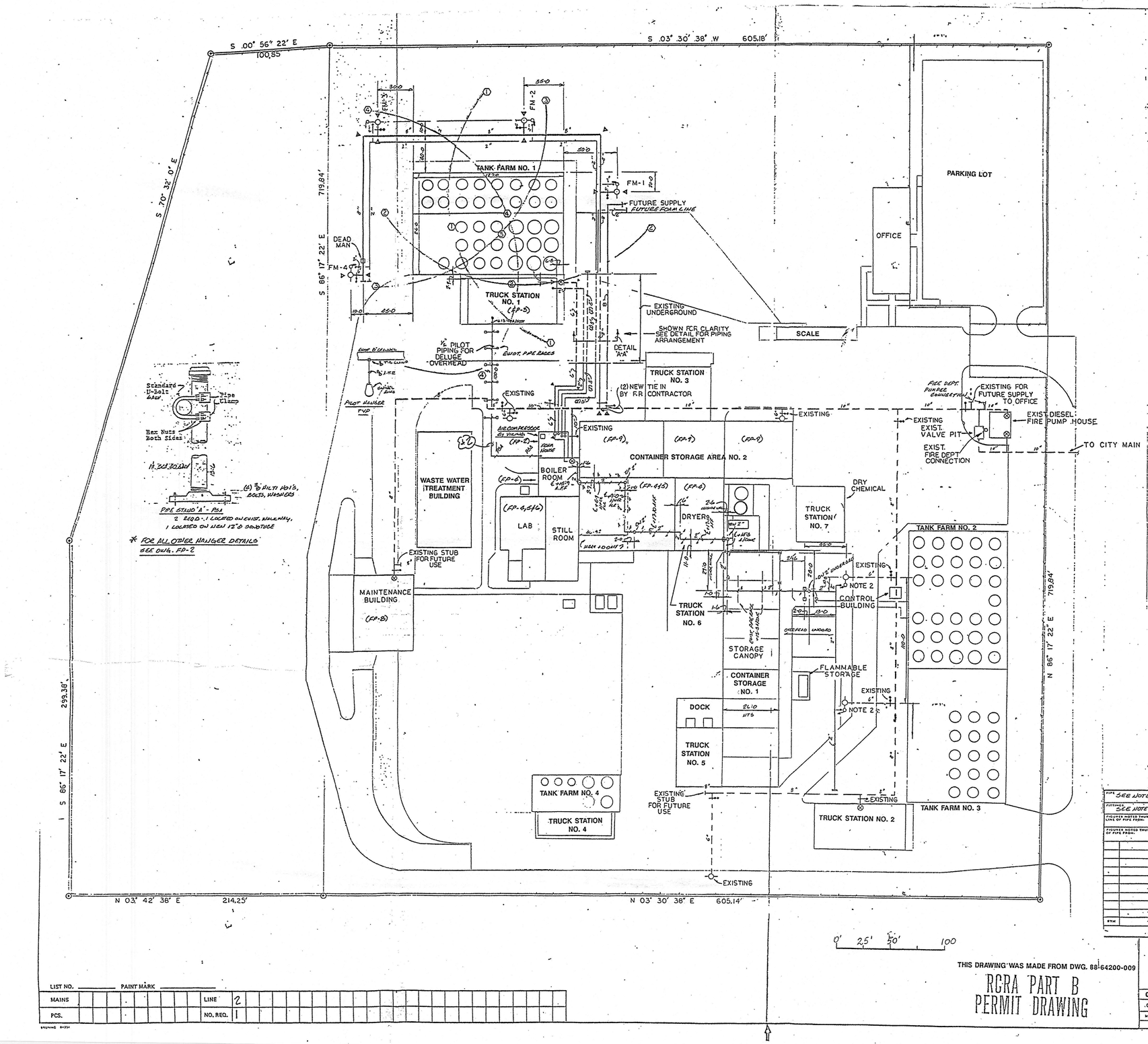

NOTES

1 UNDER GROUND DEPTH OF COVER PER NFPA 24
2 HYDRANT EXISTS ADD 2' FOAM LINE, MONITOR, ELBOW AND NOZZLE PER SPEC.

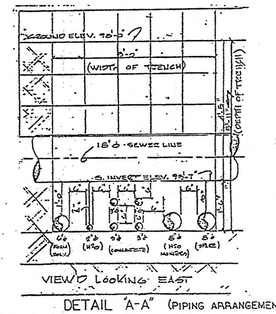

DETAIL 'A-A' (PIPING ARRANGEMENT UNDER STREET)

NOTES
- ALL UNDERGROUND PIPE SHALL BE FIBERGLASS
- ALL UNDERGROUND FITS. TO BE QUICK-LOCK FIBERGLASS
- ABOVE GROUND FOAM CONCENTRATE LINES SAME AS ABOVE
- 2" PILOT PIPE: SCH 40 BLK., FITS: 150# M.I. CAST
- EXIST. VALVE PIT CONTAINS: FIRE DEPT. CONN., CHECK VA, SWING CK. VA, (2) OS&Y GATE VAS.
- EXISTING DIESEL PUMP & PUMP HOUSE, INSTALLED UNDER SPRINKLER PLAN CERT. # 846093.

LEGEND

- MONITOR
- HYDRANT
- FOAM UNDER GROUND PVC
- WATER UNDER GROUND
- PLUG OR CAP
- THRUST BLOCK
- POST INDICATOR VALVE
- GATE VALVE WITH BUFFALO BOX
- EXISTING PIPE
- BY CONTRACTOR
- 0 SLEEVE IN WALL BY VIKING

FIRE PUMP

1 WATER SUPPLY - STATIC 58 PSI RESIDUAL PRESSURE 45 PSI WITH 980 GPM FLOWING
2 DIESEL DRIVEN PUMP PEERLESS 5AF10 1000 GPM AT 95 PSI 1760 RPM SERIAL NUMBER 431803

EXHIBIT NO. 4

NORTH

2	5-2-88	EXI. PIPE STATE OF OHIO LICENSED DOTE 6-19-88
1	2-5-88	PER FIELD SURVEY

CleanHarbors
RECYCLING SERVICES of OHIO, LLC
581 Milliken Drive
Hebron, Ohio 43025

[redacted]

PIPE: SEE NOTED ABOVE
FITTINGS: SEE NOTED ABOVE
FIGURES NOTED THUS (1") DENOTE DISTANCE IN INCHES, UP TO 72"; DOWN TO CENTER-LINE OF PIPE FROM.
FIGURES NOTED THUS (1') DENOTE DISTANCE IN FEET AND INCHES UP TO CENTER-LINE OF PIPE FROM.

THIS SHEET: PLOT PLAN
SPECIFICATIONS BY: OWNER
DESIGN CRITERIA: PER SPECIFICATION
PLANS BY: M.L.
SURVEY BY: B.S.
SCALE: 1" = 30'-0"
DATE: 9-10-1987
CHECKED: [signature]
COMPANY NO.: 41-88024
DRAWING NO.: FP-1
SHEET: 1 OF 1

SYM	DESCRIPTION	ORIF.	"K"	RATING	PATTN.	QUAN.
	SPRINKLERS AND SPRAY NOZZLES					

VIKING
VIKING FIRE PROTECTION CO.
SPECIAL HAZARDS DIVISION
451 NORTHGATE PARKWAY
WHEELING, ILLINOIS 60090
(312) 459-6890

NO.	DESCRIPTION	BY	DATE
0	REVISED PER NOD	RDK	5-01-91
.0	ISSUED FOR PERMITTING	NPA	11-6-89

REVISIONS

TITLE: FIRE PROTECTION SYSTEM

CleanHarbors
RECYCLING SERVICES of OHIO, LLC
581 Milliken Drive
Hebron, Ohio 43025
PHONE (313) 237-8450

HEBRON OHIO RECYCLE CENTER

DRAWN: V
DATE: 9-12-87
DRAWING NO.: 90-64200-009
REV: 1

THIS DRAWING WAS MADE FROM DWG. 88-64200-009

RCRA PART B PERMIT DRAWING

LIST NO.	PAINT MARK												
MAINS										LINE	2		
PCS.										NO. REQ.	1		

BRUNING 84351

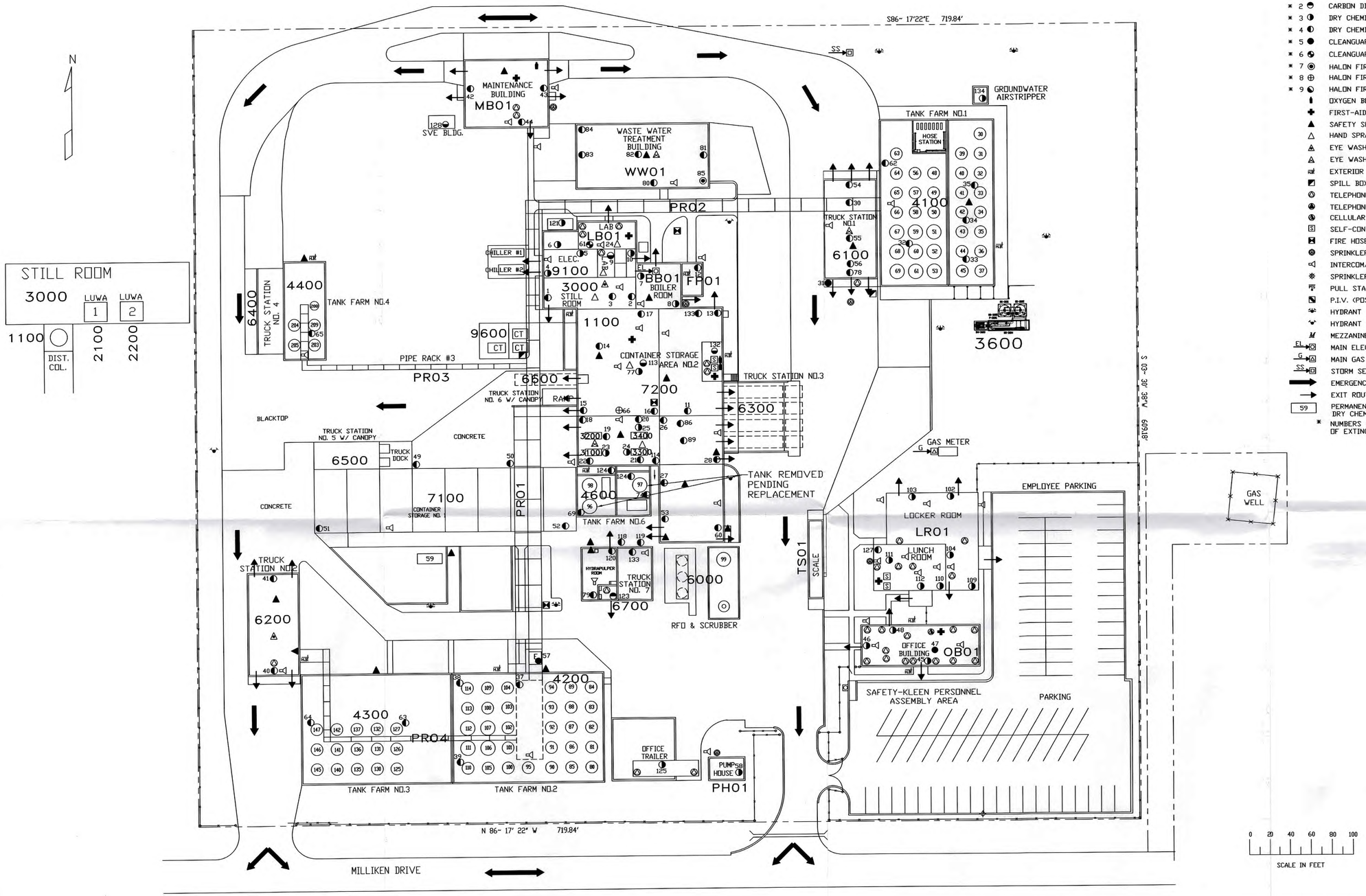

LEGEND

- * 1 CARBON DIOXIDE FIRE EXTINGUISHER - HAND HELD TYPE (10 # BC)
- * 2 CARBON DIOXIDE FIRE EXTINGUISHER - HAND HELD TYPE (15 # BC)
- * 3 DRY CHEMICAL FIRE EXTINGUISHER - HAND HELD TYPE (10 # ABC)
- * 4 DRY CHEMICAL FIRE EXTINGUISHER - HAND HELD TYPE (20 # ABC)
- * 5 CLEANGUARD FIRE EXTINGUISHER - HAND HELD (9.5 #)
- * 6 CLEANGUARD FIRE EXTINGUISHER - HAND HELD (4.75 #)
- * 7 HALON FIRE EXTINGUISHER (5 #)
- * 8 HALON FIRE EXTINGUISHER (9 #)
- * 9 HALON FIRE EXTINGUISHER (13 #)
- OXYGEN BOTTLE
- FIRST-AID KIT
- SAFETY SHOWER WITH EYE WASH FOUNTAIN
- HAND SPRAY ONLY
- EYE WASH WITH HAND SPRAY
- EYE WASH ONLY
- EXTERIOR HOSE BIBB
- SPILL BOX
- TELEPHONE
- TELEPHONE W/INTERCOM
- CELLULAR PHONE
- SELF-CONTAINED BREATHING APPARATUS (S.C.B.A.)
- FIRE HOSE
- SPRINKLER ALARM
- INTERCOM/ALERT (HORN)
- SPRINKLER RISER FOR A.F.F.F. (AQUEOUS FILM FORMING FOAM)
- PULL STATION
- P.I.V. (POST INDICATOR VALVE)
- HYDRANT - FOAM MONITOR
- HYDRANT - WATER
- MEZZANINE
- EL MAIN ELECTRIC SWITCH
- G MAIN GAS VALVE
- SS STORM SEWER CUTOFF
- EMERGENCY EVACUATION ROUTES
- EXIT ROUTES FOR BUILDINGS
- 59 PERMANENTLY INSTALLED 50# FIXED DRY CHEMICAL SYSTEM

* NUMBERS GIVEN NEXT TO EXTINGUISHERS ARE FOR MAINTENANCE REMOVAL AND RETURN OF EXTINGUISHERS LOCATED THROUGH-OUT SITE.

NOTES

PROCESS NUMBERING SYSTEM

1100	DISTILL. COLUMN NO.1
2100	LUWA NO. 1
2200	LUWA NO. 2
3000	STILL ROOM
3100	SAFETY-THERM NO. 1
3200	SAFETY-THERM NO. 2
3300	SAFETY-THERM NO. 3
3400	SAFETY-THERM NO. 4
3600	DEHYDRATION UNIT
4100	TANK FARM NO. 1
4200	TANK FARM NO. 2
4300	TANK FARM NO. 3
4400	TANK FARM NO. 4
4600	TANK FARM NO. 6
6100	TRUCK STATION NO. 1
6200	TRUCK STATION NO. 2
6300	TRUCK STATION NO. 3
6400	TRUCK STATION NO. 4
6500	TRUCK STATION NO. 5
6600	TRUCK STATION NO. 6
6700	TRUCK STATION NO. 7
7100	CONTAINER STORAGE AREA NO. 1
7200	CONTAINER STORAGE AREA NO. 2
9100	ELECTRICAL ROOM
9600	COOLING WATER

FACILITY SUPPORT UNIT/AREA LETTERING SYSTEM

BB01	BOILER BUILDING
FP01	FIRE PROTECTION BUILDING
LB01	LABORATORY BUILDING
LR01	LOCKER ROOM
MB01	MAINTENANCE BUILDING
OB01	OFFICE BUILDING
PH01	PUMP HOUSE
PR01	PIPERACK
PR02	PIPERACK
PR03	PIPERACK
PR04	PIPERACK
TS01	TRUCK SCALE
WW01	WASTE WATER TREATMENT BUILDING

0 20 40 60 80 100
SCALE IN FEET

ATTACHMENT 7-10

EXHIBIT NO. 5

DF=H90004P18

NO.	DESCRIPTION	BY	CK	APPR	DATE
18	RCRA PERMIT RENEWAL UPDATES	KMC			04/09/15
17	RCRA PERMIT RENEWAL UPDATE	KMC			12/12/14
16	UPDATED FIRE EXTINGUISHERS	GK			03/31/06
15	ADDED EXT. No. 134	GK			11/30/05
14	ADDED S/S & EYEWASH T/T #2	GK			9/15/00
13	RFO, HYDRAP. & TRAILER MOD'S	GK			3/28/00
12	ADDED EXT. No. 133	GK			5/24/99
11	ADDED EXT. No. 132	GK			5/7/99
10	ADD EXT.#128	GK			2/11/99
9	ADD EXT.#127	GK			12/1/98
8	ADD PAGING SPKRS & EXT.#126	GK			5/12/98
7	OFFICE TRLR & PHONE MOD'S	GK			11/7/97
6	ADDED 5 EXTINGUISHERS	GK			8/3/96

REVISIONS

EXISTING FACILITY TRAFFIC FLOW, EMERGENCY EQUIPMENT LOCATIONS AND EVACUATION ROUTES

CleanHarbors

581 MILLIKEN DRIVE, HEBRON, OHIO 43025 PHONE (740) 929-3532

SCALE	DRAWN	CHECKED	PROJ. ENG. APPR.	OPERATION APPR	DATE
1"=40'	RDK	KJM			10/18/94

HEBRON, OH RECYCLE CENTER

DRAWING NO. 90-64200-004

REV 18

THIS DRAWING CONTAINS INFORMATION PROPRIETARY TO CLEAN HARBORS ANY REPRODUCTIONS, DISCLOSURE OR USE OF THIS DRAWING IS EXPRESSLY PROHIBITED EXCEPT BY CLEAN HARBORS OR AS CLEAN HARBORS MAY AGREE IN WRITTING.

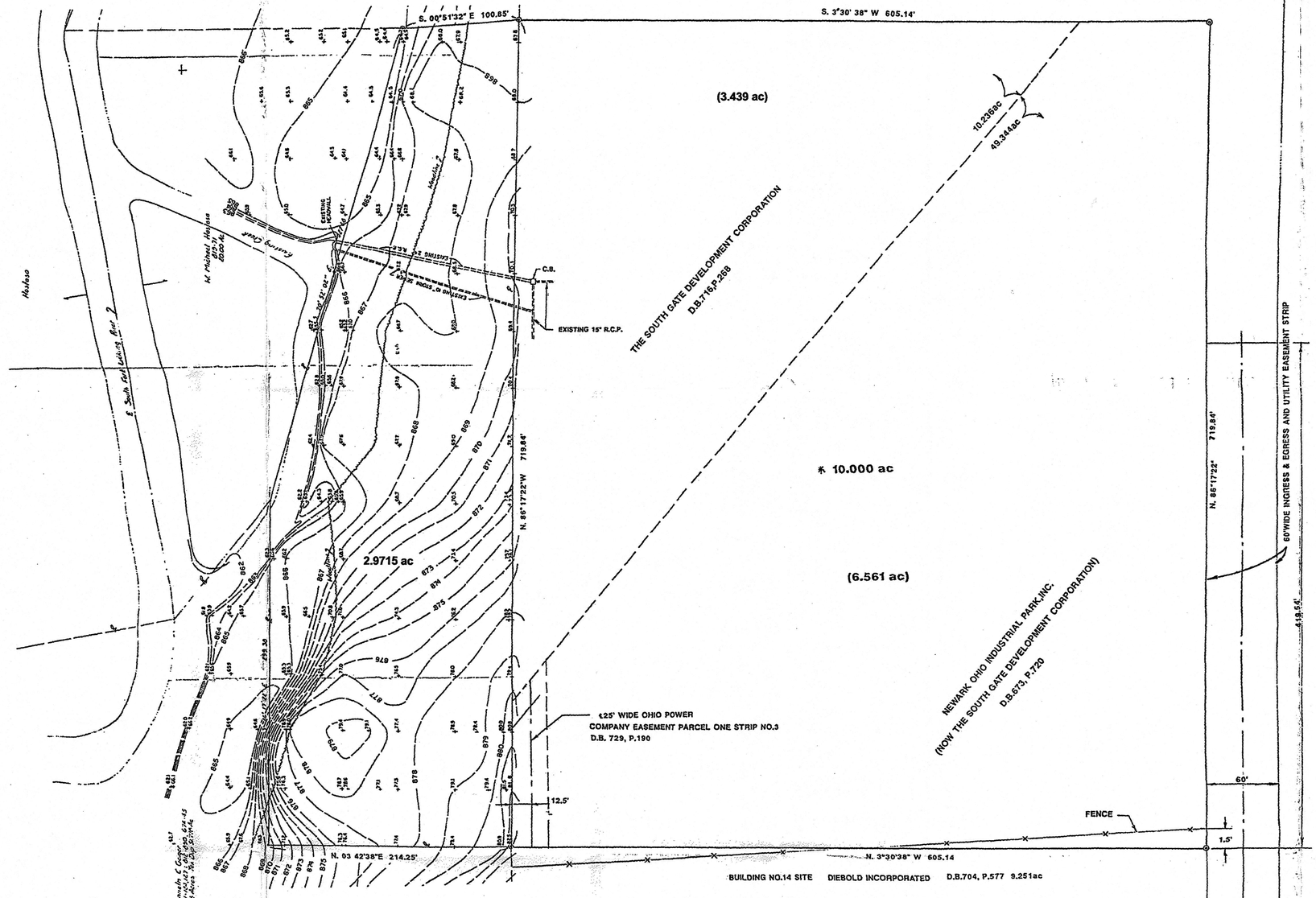

[redacted]

its successors and assigns, the following described real estate:

Situated in the State of Ohio, County of Licking, Township of Union, being in the Third Quarter of Township 1, Range 12, United States Military Lands, containing 10.000 acres of land, more or less, 3.439 acres of said 10.000 acres being part of that 10.236 acre tract of land conveyed to The Southgate Development Corporation by deed of record in Deed Book 716, Page 628, and 6.561 acres of said 10.000 acres being part of that 49.344 acre tract of land described in a deed to Newark Ohio Industrial Park, Inc., which corporation was merged into The Southgate Development Corporation, said deed being of record in Deed Book 673, Page 720, both being of record in the Recorder's Office, Licking County, Ohio, said 10.000 acres being more particularly described as follows:

Beginning, for reference, at the southwesterly corner of said 49.344 acre tract, the same being a northwesterly corner of that 359.376 acre tract of land described in a deed to The Ohio Basic Investment Company (the Articles of Incorporation of which were amended to change its name to Newark Ohio Industrial Park, Inc., and which corporation was subsequently merged into The Southgate Development Corporation), of record in Deed Book 605, Page 673, said reference point of beginning also being the northwesterly corner of that 5.995 acre tract of land described in a deed to Newark Ohio Industrial Park, Inc. (now The Southgate Development Corporation as aforementioned), of record in Deed Book 650, Page 368, all being of record in the Recorder's Office, Licking County, Ohio; thence, from said reference point of beginning, North 3° 49' 37" East, with the westernmost line of said 49.344 acre tract, a distance of 405.97 feet to a northwesterly corner of said 49.344 acre tract; thence South 86° 23' 13" East, with a northerly line of said 49.344 acre tract, a distance of 603.16 feet to a corner of said 49.344 acre tract; thence North 11° 48' 57" East, with a westerly line of said 49.344 acre tract, a distance of 535.00 feet to a northwesterly corner of said 49.344 acre tract; thence South 86° 17' 22" East, along the north line of said 49.344 acre tract and with the northerly line of that 9.251 acre tract of land described in a deed to Diebold Incorporated, of record in Deed Book 704, Page 577, Recorder's Office, Licking County, Ohio, a distance of 1246.74 feet to the true point of beginning at the northeasterly corner of said 9.251 acre tract;

Thence, from said true point of beginning, South 86° 17' 22" East, with the northernmost line of said 49.344 acre tract and with the northerly line of said 10.236 acre tract, a distance of 719.84 feet to a point;

Thence South 3° 30' 38" West, parallel with the easterly line of said 9.251 acre tract, a distance of 605.14 feet to a point;

Thence North 86° 17' 22" West, parallel with and 60.00 feet northerly from, as measured at right angles, the northerly line of that 39.998 acre tract of land described in a deed to Tenneco Inc., of record in Deed Book 702, Page 589, Recorder's Office, Licking County, Ohio, a distance of 719.84 feet to the southeasterly corner of said 9.251 acre tract;

Thence North 3° 30' 38" East, with the easterly line of said 9.251 acre tract, a distance of 605.14 feet to the true point of beginning and containing 10.000 acres of land, more or less.

The foregoing description was prepared and a survey of said property was made by Bauer, Borowitz & Merchant, Inc., Consulting Engineers, 2607-1/2 North High Street, Columbus, Ohio 43202, by Felix R. Borowitz, Ohio Registered Surveyor No. 5561, on May 5, 1980.

I hereby certify that I did supervise the preparation of this plat this 22 day of June 1981.

Harold W. Hitchens
Harold W Hitchens Registered Surveyor 4623

Situated in the State of Ohio, County of Licking, Township of Union, being in the Third Quarter of Township 1, Range 12 of the United States Military Lands and being further bounded and described as follows:

Beginning for a point of reference at a point on the line between the Third Quarter of Township 1, Range 12 and the Fourth Quarter of Township 1, Range 13 at the southwesterly corner of a 49.344 acre tract and the northwesterly corner of a 359.376 acre tract of land described in a deed to the Ohio Basic Investment Company (the Articles of Incorporation of which were amended to change its name to Newark Ohio Industrial Park, Inc., and which corporation was subsequently merged into the Southgate Development Corporation), of record in Deed Book 605, page 673, said reference point also being the northwesterly corner of a 5.995 acre tract of land described in a deed to Newark Ohio Industrial Park, Inc. (now the Southgate Development Corporation as aforementioned), in Deed Book 650, page 368, all being recorded in the Recorder's Office, Licking County, Ohio; thence N. 03° 49' 37" East, along the westerly line of said 49.344 acre tract, a distance of 405.97 feet to the northwest corner of said 49.344 acre tract; thence S. 86° 23' 13" East, along the north line of said 49.344 acre tract, a distnace of 603.16 feet to a corner of said 49.344 acre tract; thence North 11° 48' 57" East, along the westerly line of said 49.344 acre tract, a distance of 535.00 feet to the northwest corner of said 49.344 acre tract; thence S. 86° 17' 22" East, along the north line of said 49.344 acre tract and along the north line of a 9.251 acre tract of land described in a deed to Diebold Incorporated, recorded in Deed Book 704, page 577, Recorder's Office, Licking County, Ohio, a distance of 1246.74 feet to a corner of said 9.251 acre tract, said point marked by an iron pin found, also said point being the true place of beginning of this tract; thence N. 03° 42' 38" East 214.25 feet to a point marked by a 5/8-inch iron pin set; thence S. 86° 17' 22" E. 299.38 feet to a point marked by a 5/8-inch iron pin set, said point being the southwest corner of a tract conveyed to W. Michael Hostasa as recorded in Deed Book 819, page 71 of the Licking County Deed Records; thence S. 70° 52' 02" E. 427.88 feet to a point marked by an iron pin found at the southeast corner of said Hostasa tract; thence S. 00° 56' 32" E. 100.85 feet to a point marked by an iron pin found, said point being the Northeast corner of a 10.00 acre tract conveyed to Safety Kleen Corporation as recorded in Deed Book 806, page 376 of the Licking County Deed Records; thence N. 86° 17' 22" W. 719.84 feet along the north line of said Safety Kleen Corporation tract to the place of beginning.

Containing 2.9715 acres subject to all legal road right-of-way and any valid or existing easements of record.

The bearings used in this description are based on the deed to Safety Kleen Corporation as recorded in Deed Book 806, page 376 of the Licking County Deed Records.

This description was prepared by Hitchens Engineering and Surveying from a survey made by same during May of 1984.

* Situated in the State of Ohio, County of Licking, Township of Union, being in the Third Quarter of Township 1, Range 12, United States Military Lands, being 10.000 acres of land, more or less, 3.439 acres of said 10.000 acres being part of that 10.236 acre tract of land conveyed to The Southgate Development Corporation by deed of record in Deed Book 716, Page 628, and 6.561 acres of said 10.000 acres being part of that 49.344 acre tract of land described in a deed to Newark Ohio Industrial Park, Inc., which corporation was merged into The Southgate Development Corporation, said deed being of record in Deed Book 673, Page 720, both being of record in the Recorder's Office, Licking County, Ohio

We hereby certify that the attached map was prepared from information obtained from an actual survey performed at the premises by Bauer, Borowitz & Merchant, Inc. and that said map is correct.

BAUER, BOROWITZ & MERCHANT, INC.
Consulting Engineers
by Felix R. Borowitz
Felix R. Borowitz, Registered Surveyor No. 5561

BOUNDARY MAP
OF 10.000 ACRES OF LAND OUT OF THE SOUTHGATE DEVELOPMENT CORPORATION LANDS IN UNION TOWNSHIP, LICKING COUNTY, OHIO, LOCATED EAST OF AND ADJACENT TO BUILDING 14 SITE IN NEWARK OHIO INDUSTRIAL PARK

May 5, 1980

0 50 ft.
SCALE

[redacted]

DF=EXHIBIT-7

EXHIBIT NO. 7

NO.	DESCRIPTION	BY	CK	APPR	DATE
1	REVISED ACREAGE FIGURES TO MATCH SURVEY TEXT	SWL			11/15/02
0	ISSUED FOR PART "B" PERMIT				

REVISIONS

PROPERTY SURVEY

CleanHarbors
RECYCLING SERVICES of OHIO, LLC
581 Milliken Drive
Hebron, Ohio 43025

[redacted]

SCALE	DRAWN	CHECKED	PROJ. ENG. APPR.	OPERATION APPR	DATE
1"= 40'					

HEBRON, OHIO
RECYCLE CENTER

DRAWING NO. 90-64200-000

REV 1

440PROPSURVEY

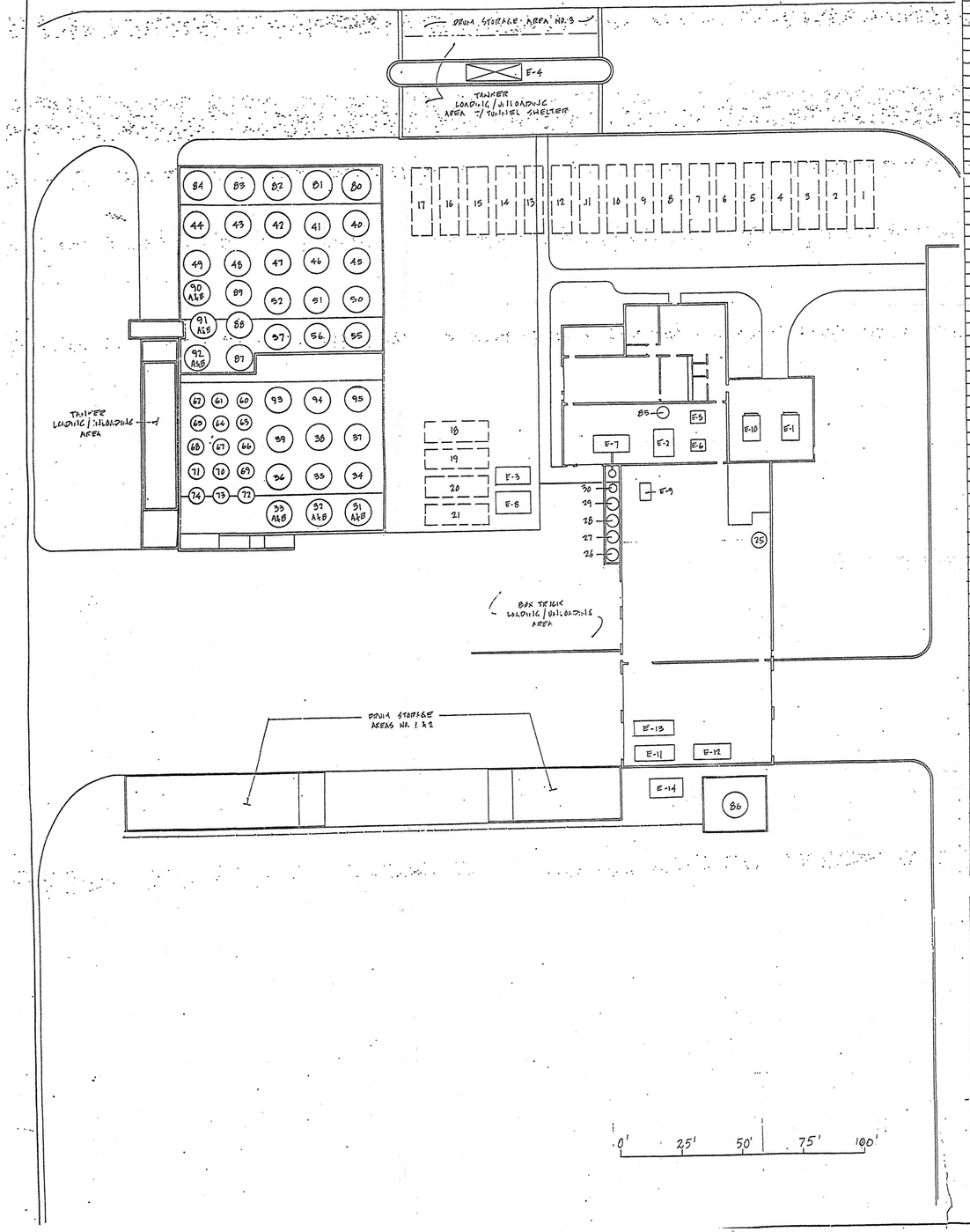

TANK DATA SCHEDULE

TANK NO.	CAPACITY	TANK TYPE *	CONTENTS & / OR USAGE
1	10000 GAL	STEEL U.G.	STODDARD SOLVENT RUNDOWN & STORAGE TANK
2	10000 GAL	STEEL U.G.	STODDARD SOLVENT RUNDOWN & STORAGE TANK
3	10000 GAL	STEEL U.G.	STODDARD SOLVENT RUNDOWN & STORAGE TANK
4	10000 GAL	STEEL U.G.	STODDARD SOLVENT RUNDOWN & STORAGE TANK
5	10000 GAL	STEEL U.G.	STODDARD SOLVENT RUNDOWN & STORAGE TANK
6	10000 GAL	STEEL U.G.	STODDARD SOLVENT RUNDOWN & STORAGE TANK
7	10000 GAL	STEEL U.G.	STODDARD SOLVENT RUNDOWN & STORAGE TANK
8	10000 GAL	STEEL U.G.	STODDARD SOLVENT RUNDOWN & STORAGE TANK
9	10000 GAL	STEEL U.G.	STODDARD SOLVENT RUNDOWN & STORAGE TANK
10	10000 GAL	STEEL U.G.	RECYCLED STODDARD SOLVENT STORAGE TANK
11	10000 GAL	STEEL U.G.	RECYCLED STODDARD SOLVENT STORAGE TANK
12	10000 GAL	STEEL U.G.	RECYCLED STODDARD SOLVENT STORAGE TANK
13	10000 GAL	STEEL U.G.	RECYCLED STODDARD SOLVENT STORAGE TANK
14	10000 GAL	STEEL U.G.	VIRGIN 140° STODDARD SOLVENT STORAGE TANK
15	10000 GAL	STEEL U.G.	LIGHT ends PRODUCTS STORAGE TANK
16	10000 GAL	STEEL U.G.	DIESEL FUEL STORAGE TANK
17	10000 GAL	STEEL U.G.	STODDARD SOLVENT SLUDGE TANK
18	10000 GAL	STEEL U.G.	CHLORINATED SOLVENT BOTTOMS TANK
19	10000 GAL	STEEL U.G.	CHLORINATED SOLVENT BOTTOMS TANK
20	10000 GAL	STEEL U.G.	STODDARD SOLVENT SLUDGE TANK
21	10000 GAL	STEEL U.G.	CHLORINATED SLUDGE & WATER TANK
25	1000 GAL	STEEL A.G.	CHLORINATED SOLVENT BLENDING TANK
26	2300 GAL	STL A.G./C.B.	CHLORINATED SOLVENT SETTLING TANK
27	2300 GAL	STL A.G./C.B.	CHLORINATED SOLVENT SETTLING TANK
28	2300 GAL	STL A.G./C.B.	CHLORINATED SOLVENT SETTLING TANK
29	2300 GAL	STL A.G./C.B.	CHLORINATED SOLVENT SETTLING TANK
30	2300 GAL	STL A.G./C.B.	DISTILLATION COLUMN DRAIN DOWN TANK
31A	7500 GAL	STL A.G./C.B.	CHLORINATED SOLVENT BLEND SETTLING/CHARGE TANK
31B	7500 GAL	STL A.G./C.B.	CHLORINATED SOLVENT BLEND SETTLING/CHARGE TANK
32A	7500 GAL	STL A.G./C.B.	CHLORINATED SOLVENT BLEND SETTLING/CHARGE TANK
32B	7500 GAL	STL A.G./C.B.	CHLORINATED SOLVENT BLEND SETTLING/CHARGE TANK
33A	7500 GAL	STL A.G./C.B.	CHLORINATED SOLVENT BLEND SETTLING/CHARGE TANK
33B	7500 GAL	STL A.G./C.B.	CHLORINATED SOLVENT BLEND SETTLING/CHARGE TANK
34	19000 GAL	STL A.G./C.B.	CHLORINATED SOLVENT BLEND SETTLING/CHARGE TANK
35	19000 GAL	STL A.G./C.B.	CHLORINATED SOLVENT BLEND SETTLING/CHARGE TANK
36	19000 GAL	STL A.G./C.B.	CHLORINATED SOLVENT BLEND SETTLING/CHARGE TANK
37	19000 GAL	STL A.G./C.B.	CHLORINATED SOLVENT BLEND SETTLING/CHARGE TANK
38	19000 GAL	STL A.G./C.B.	CHLORINATED SOLVENT BLEND SETTLING/CHARGE TANK
39	19000 GAL	STL A.G./C.B.	CHLORINATED SOLVENT BLEND SETTLING/CHARGE TANK
40	19000 GAL	STL A.G./C.B.	STODDARD SOLVENT SETTLING TANK
41	19000 GAL	STL A.G./C.B.	STODDARD SOLVENT SETTLING TANK
42	20000 GAL	STEEL A.G.	STODDARD SOLVENT BOTTOMS STORAGE TANK
43	20000 GAL	STEEL A.G.	RECYCLED STODDARD SOLVENT STORAGE TANK
44	20000 GAL	STEEL A.G.	RECYCLED STODDARD SOLVENT STORAGE TANK
45	19000 GAL	STL A.G./C.B.	STODDARD SOLVENT SETTLING TANK
46	20000 GAL	STEEL A.G.	CHLORINATED SOLVENT BLEND RUN-UP TANK
47	20000 GAL	STEEL A.G.	CHLORINATED SOLVENT BLEND RUN-UP TANK
48	20000 GAL	STEEL A.G.	RECYCLED STODDARD SOLVENT STORAGE TANK
49	20000 GAL	STEEL A.G.	RECYCLED STODDARD SOLVENT STORAGE TANK
50	15000 GAL	STL A.G./C.B.	STODDARD SOLVENT CHARGE TANK
51	15000 GAL	STL A.G./C.B.	STODDARD SOLVENT CHARGE TANK
52	15000 GAL	STL A.G./C.B.	STODDARD SOLVENT SETTLING TANK
53	—	—	—
54	—	—	—
55	15000 GAL	STL A.G./C.B.	STODDARD SOLVENT CHARGE TANK
56	20000 GAL	STEEL A.G.	STODDARD SOLVENT CHARGE TANK
57	15000 GAL	STL A.G./C.B.	STODDARD SOLVENT SETTLING TANK
58	—	—	—
59	—	—	—
60	5000 GAL	STEEL A.G.	RECYCLED METHYLENE CHLORIDE STORAGE TANK
61	5000 GAL	STEEL A.G.	RECYCLED METHYLENE CHLORIDE STORAGE TANK
62	5000 GAL	STEEL A.G.	VIRGIN METHYLENE CHLORIDE STORAGE TANK
63	5000 GAL	STEEL A.G.	RECYCLED TRICHLOROETHYLENE STORAGE TANK
64	5000 GAL	STEEL A.G.	RECYCLED TRICHLOROETHYLENE STORAGE TANK
65	5000 GAL	STEEL A.G.	VIRGIN TRICHLOROETHYLENE STORAGE TANK
66	8000 GAL	STEEL A.G.	RECYCLED 1,1,1-TRICHLOROETHANE STORAGE TANK
67	8000 GAL	STEEL A.G.	RECYCLED 1,1,1-TRICHLOROETHANE STORAGE TANK
68	8000 GAL	STEEL A.G.	VIRGIN 1,1,1-TRICHLOROETHANE STORAGE TANK
69	8000 GAL	STEEL A.G.	RECYCLED PERCHLOROETHYLENE STORAGE TANK
70	8000 GAL	STEEL A.G.	RECYCLED PERCHLOROETHYLENE STORAGE TANK
71	8000 GAL	STEEL A.G.	VIRGIN PERCHLOROETHYLENE STORAGE TANK
72	8000 GAL	STEEL A.G.	RECYCLED 1,1,1-TRICHLOROETHANE STORAGE TANK

SCHEDULE CONTINUED —

TANK NO.	CAPACITY	TANK TYPE *	CONTENTS & / OR USAGE
73	8000 GAL	STEEL A.G.	RECYCLED 1,1,1-TRICHLOROETHANE STORAGE TANK
74	8000 GAL	STEEL A.G.	RECYCLED 1,1,1-TRICHLOROETHANE STORAGE TANK
75	—	—	—
76	—	—	—
77	—	—	—
78	—	—	—
79	—	—	—
80	30000 GAL	STEEL A.G.	SPENT STODDARD SOLVENT STORAGE TANK
81	30000 GAL	STEEL A.G.	SPENT STODDARD SOLVENT STORAGE TANK
82	30000 GAL	STEEL A.G.	CHLORINATED SOLVENT BLEND RUN-UP TANK
83	30000 GAL	STEEL A.G.	CHLORINATED SOLVENT BLEND RUN-UP TANK
84	30000 GAL	STEEL A.G.	CHLORINATED SOLVENT BLEND RUN-UP TANK
85	2300 GAL	STL A.G./C.B.	RECYCLED CHLORINATED SOLVENT DAY TANK
86	20000 GAL	STEEL A.G.	STODDARD SOLVENT SLUDGE STORAGE TANK
87	15000 GAL	STL. A.G./C.B.	CHLORINATED SOLVENT BLEND RUN-UP TANK
88	15000 GAL	STL A.G./C.B.	CHLORINATED SOLVENT BLEND RUN-UP TANK
89	15000 GAL	STL A.G./C.B.	CHLORINATED SOLVENT BLEND RUN-UP TANK
90A	7500 GAL	STL A.G./C.B.	CHLORINATED SOLVENT BLEND RUN-UP TANK
90B	7500 GAL	STL A.G./C.B.	CHLORINATED SOLVENT BLEND RUN-UP TANK
91A	7500 GAL	STL A.G./C.B.	CHLORINATED SOLVENT BLEND RUN-UP TANK
91B	7500 GAL	STL A.G./C.B.	CHLORINATED SOLVENT BLEND RUN-UP TANK
92A	7500 GAL	STL A.G./C.B.	CHLORINATED SOLVENT BLEND RUN-UP TANK
92B	7500 GAL	STL. A.G./C.B.	CHLORINATED SOLVENT BLEND RUN-UP TANK
93	15000 GAL	STL. A.G./C.B.	DISTILLATION COLUMN CHARGE TANK
94	15000 GAL	STL. A.G./C.B.	DISTILLATION COLUMN CHARGE TANK
95	15000 GAL	STL. A.G./C.B.	DISTILLATION COLUMN CHARGE TANK

EQUIPMENT SCHEDULE

NO.	CAPACITY	TYPE	DESCRIPTION
E-1	100 H.P.	OHIO SPECIAL	JOHNSTON BOILER
E-2	700 GPH	VACUUM	LUWA EVAPORATOR
E-3	80 TON	—	BALTIMORE AIR COIL COOLING TOWER
E-4	—	—	LOADING DOCK FACILITY W/ TUNNEL SHELTER
E-5	300 GPH	VACUUM	WASHEX STILL MODEL 36VS
E-6	105 GPH	VACUUM	WASHEX STILL MODEL 24VS
E-7	360 GPH	SENE-TRAY	ARTISAN DISTILLATION COLUMN SYSTEM
E-8	150 TON	—	BALTIMORE AIR COIL COOLING TOWER
E-9	20 TON	CHILLED WATER	BERG MFG. VENT CONDENSER COOLANT SOURCE CHILLER
E-10	150 H.P.	OHIO SPECIAL	JOHNSTON BOILER
E-11	7000°F/HR.	ROTARY VACUUM	ANCO MODEL 600-12 DRYER
E-12	2500 GAL.	VACUUM	I.M.E. VACUUM INDUCTOR VESSEL
E-13	7000°F/HR.	ROTARY VACUUM	ANCO MODEL 600-12 DRYER
E-14	150 TON	—	BALTIMORE AIR COIL COOLING TOWER

GENERAL NOTES-

1. A.G.- DENOTES ABOVEGROUND TANK
   U.G.- DENOTES UNDERGROUND TANK
   S/C.- DENOTES SETTLING & CHARGE TANK
   C.B.- DENOTES CONE BOTTOM TANK
2. THIS DRAWING PRECEEDED BY SAFEN KLEEN DRAWING D10373

THIS DRAWING WAS MADE FROM DWG. 89-64200-010
REF. DWG. NO. E11008

EXHIBIT NO. 8

(FOR PLOT PLAN AT LEFT)

NO.	DESCRIPTION	BY	CHK.	APPR.	DATE
0	ISSUED FOR PART "B" PERMIT	RDK			12.29.89

REVISIONS

TITLE: FORMER SITE PLAN (BEFORE 1985)

CleanHarbors
RECYCLING SERVICES of OHIO, LLC
581 Milliken Drive
Hebron, Ohio 43025

SCALE: 20'=1

HEBRON, OHIO
RECYCLE CENTER

DRAWING NO. 90-64200-010

REV. 0

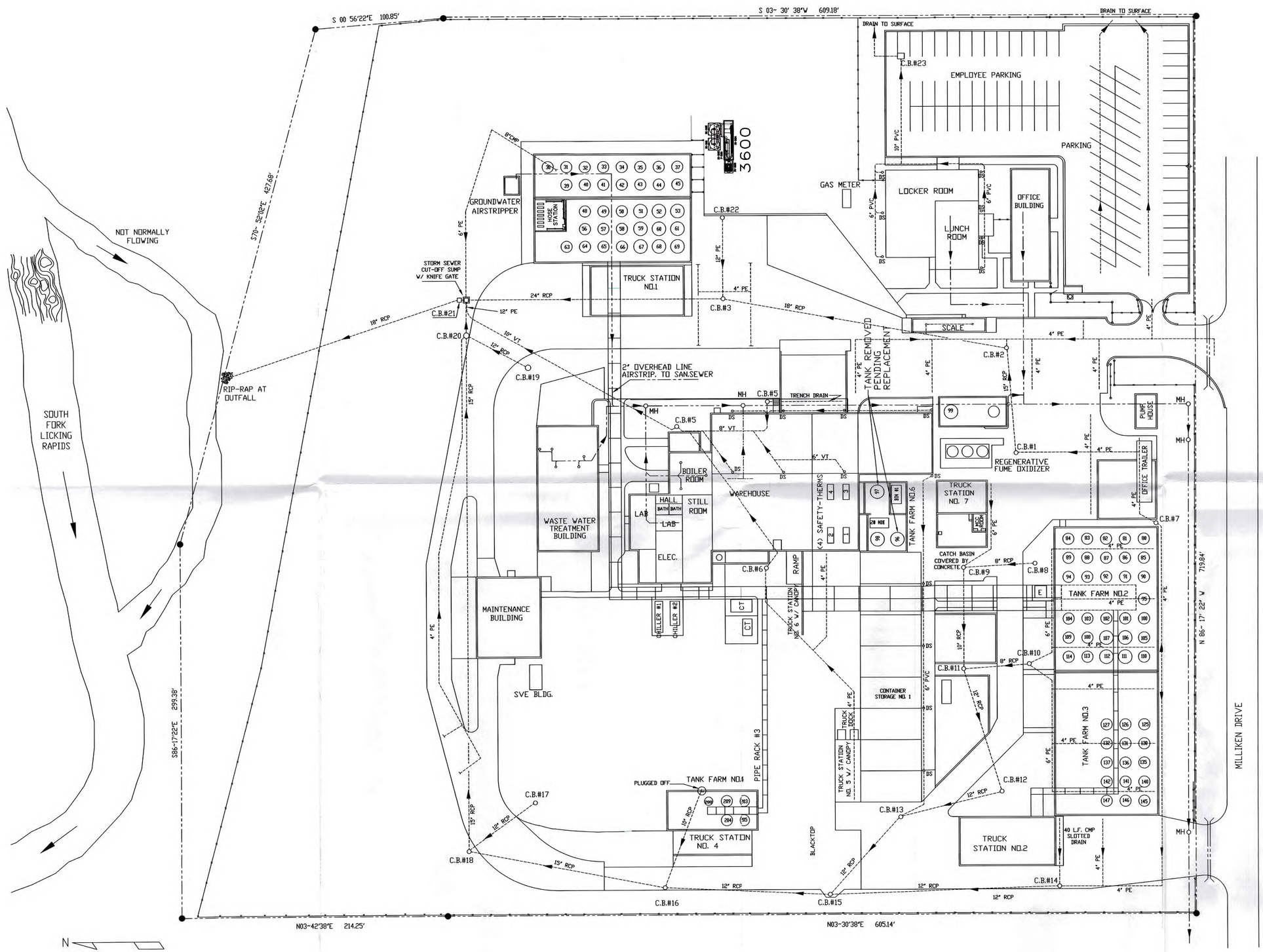

LEGEND

- FENCE
- PROPERTY LINE
- STORM SEWER
- SUBSURFACE DRAINS (TO STORM SEWER)
- SANITARY SEWER

CB = CATCH BASIN
MH = MAN HOLE
DS = DOWN SPOUT
VT = VITREOUS TILE
RDC = REINFORCED CONCRETE PIPE
PE = POLYETHYLENE
CMP = CORRUGATED METAL PIPE

0 20 40 60 80 100
SCALE IN FEET

EXHIBIT NO. 9

DF=Exhibit 9 Rev. 10

NO.	DESCRIPTION	BY	CK	APPR	DATE
10	RCRA PERMIT RENEWAL UPDATES	KMC			04/09/15
9	RCRA PERMIT RENEWAL UPDATE	KMC			12/12/14
8	REVISED FOR PERMIT RENEWAL	SWL			8/2/02
7	REDRAWN & UPDATED	GK			06/07/00

REVISIONS

STORM, SANITARY & PROCESS SEWER & SYSTEMS MAP

CleanHarbors
581 MILLIKEN DRIVE, HEBRON, OHIO 43025 PHONE (740) 929-3532

SCALE	DRAWN	CHECKED	PROJ. ENG. APPR.	OPERATION APPR	DATE
1"=40'	GK				06/07/00

HEBRON, OHIO RECYCLE CENTER

DRAWING NO. 90-64200-008 REV 10

THIS DRAWING CONTAINS INFORMATION PROPRIETARY TO CLEAN HARBORS. ANY REPRODUCTIONS, DISCLOSURE OR USE OF THIS DRAWING IS EXPRESSLY PROHIBITED EXCEPT BY CLEAN HARBORS OR AS CLEAN HARBORS MAY AGREE IN WRITTING.

Your Flood Map

Prepared by: myFloodZone.com

www.myfloodzone.com | sales@myfloodzone.com

Use the ZOOM Feature in Adobe Acrobat for more detail

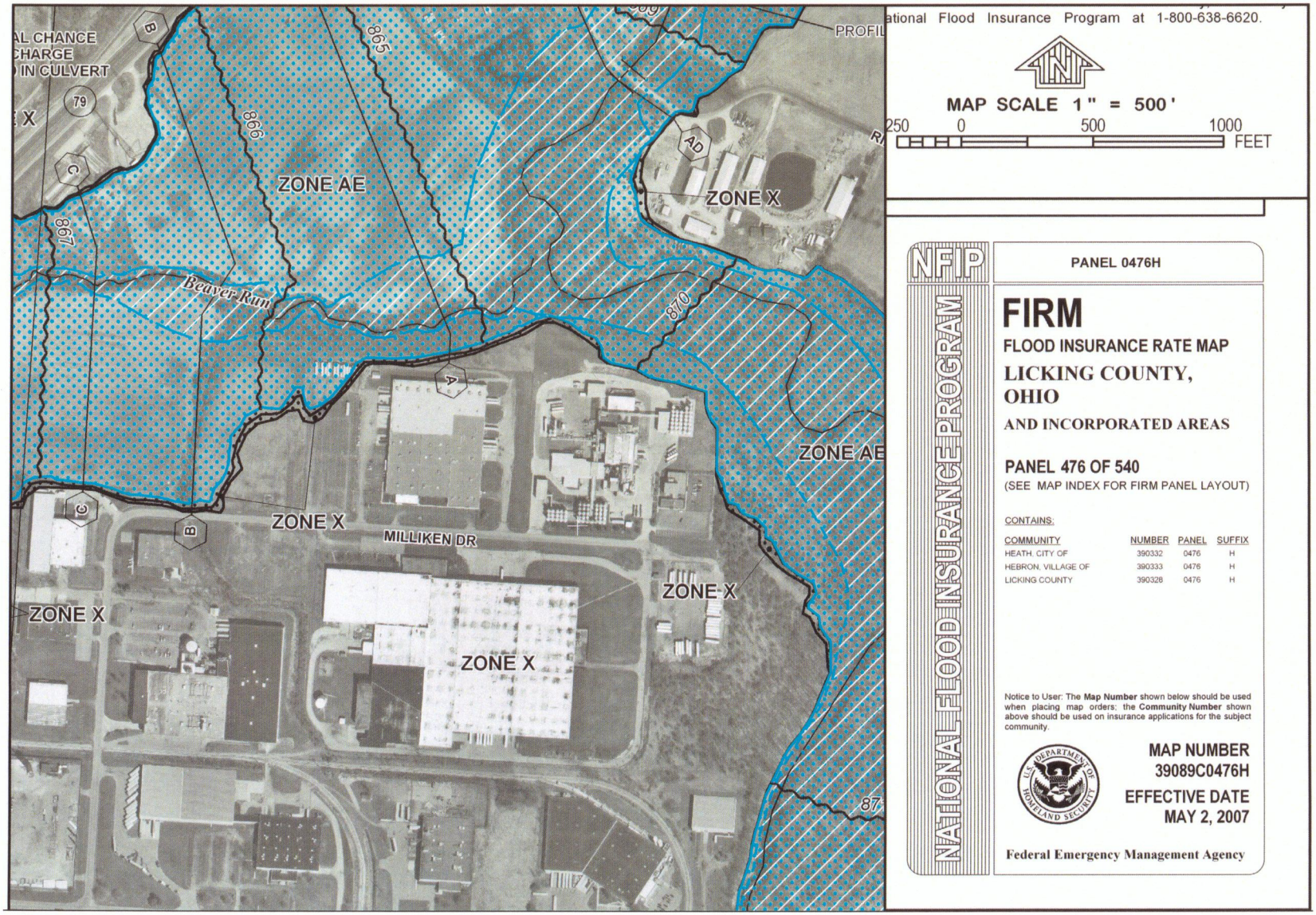

Thank you for using myFloodZone.com

Exhibit 10

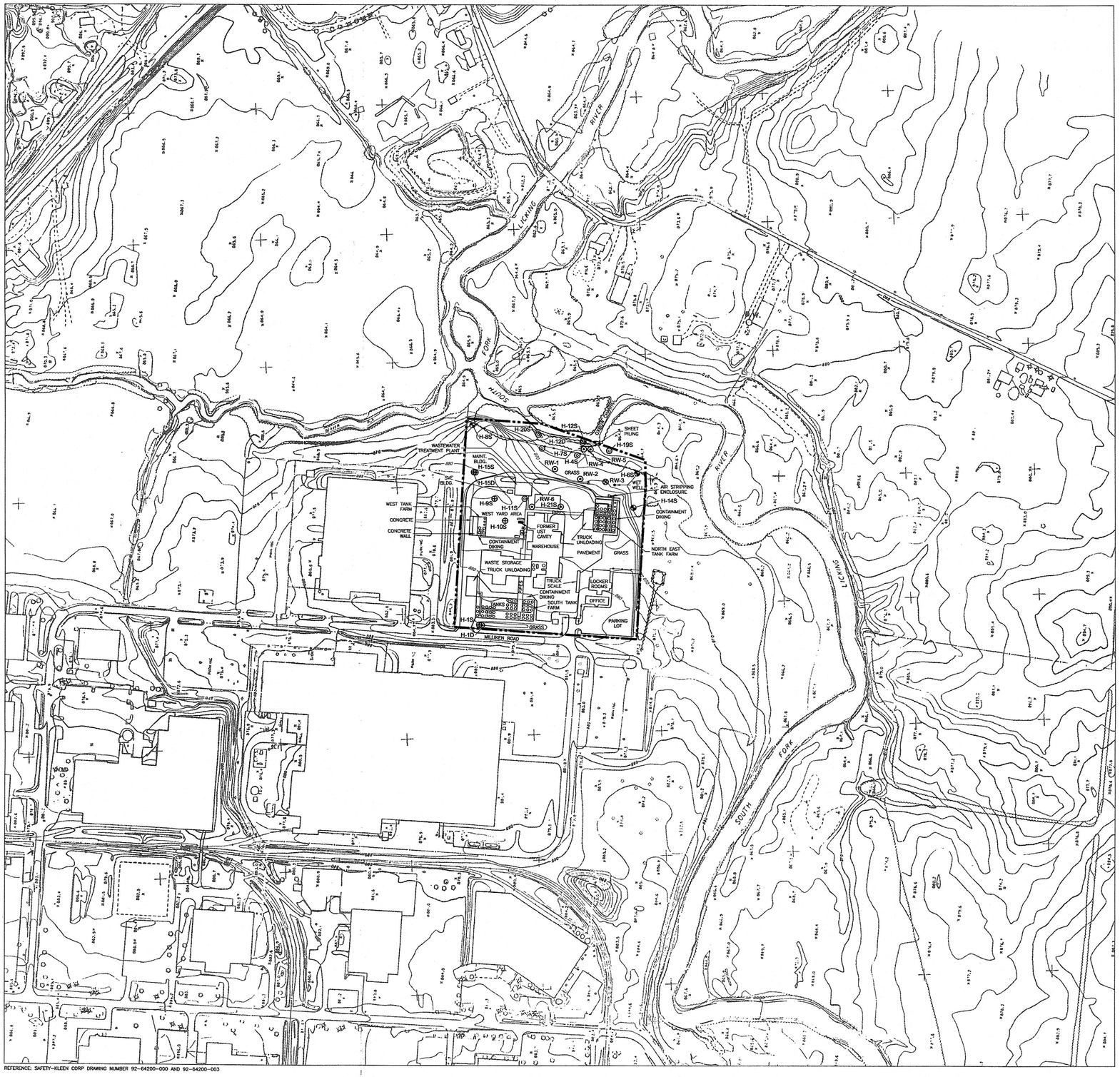

REFERENCE: SAFETY-KLEEN CORP DRAWING NUMBER 92-64200-000 AND 92-64200-003

EXPLANATION

- H-10S — POST-CLOSURE GROUNDWATER MONITORING WELL
- H-19S — CORRECTIVE ACTION GROUNDWATER MONITORING WELL
- H-14S — GROUNDWATER MONITORING WELL
- RW-2 — ACTIVE EXTRACTION WELL
- RW-3 — NON-ACTIVE EXTRACTION WELL
- FACILITY BOUNDARY
- FENCE
- STREAM CHANNEL
- TREE LINE

N

0 200 ft.
SCALE

CONTOUR INTERVAL 2 FEET

[redacted]

DF=EXHIBIT-11

EXHIBIT NO. 11

NO.	DESCRIPTION	BY	CK	APPR	DATE
4	DIGITIZED DRAWING FOR RENEWAL PERMIT	SWL			11/15/02
3	RMVD. WELLS H-1, H-2D & H-3S. RENAMED H-2S TO H-1S. REVERSED H-12S & H-12D	MBH			4/21/97
2	RMVD. CLOUDS, ADJUST PROPERTY BNDRY.	MBH			12/5/96
1	REVISED PER NOD 1994	MBH			10/17/94
0	ISSUED FOR PART 'B' PERMIT NOD	NPA			2/6/92

REVISIONS

TOPOGRAPHIC MAP OF HEBRON RECYCLE CENTER

CleanHarbors
RECYCLING SERVICES of OHIO, LLC
581 Milliken Drive
Hebron, Ohio 43025

[redacted]

SCALE	DRAWN	CHECKED	PROJ. ENG. APPR.	OPERATION APPR.	DATE
1'= 200'	RDK				

HEBRON, OHIO RECYCLE CENTER

DRAWING NO. 92-64200-003

REV 4

440TOPO

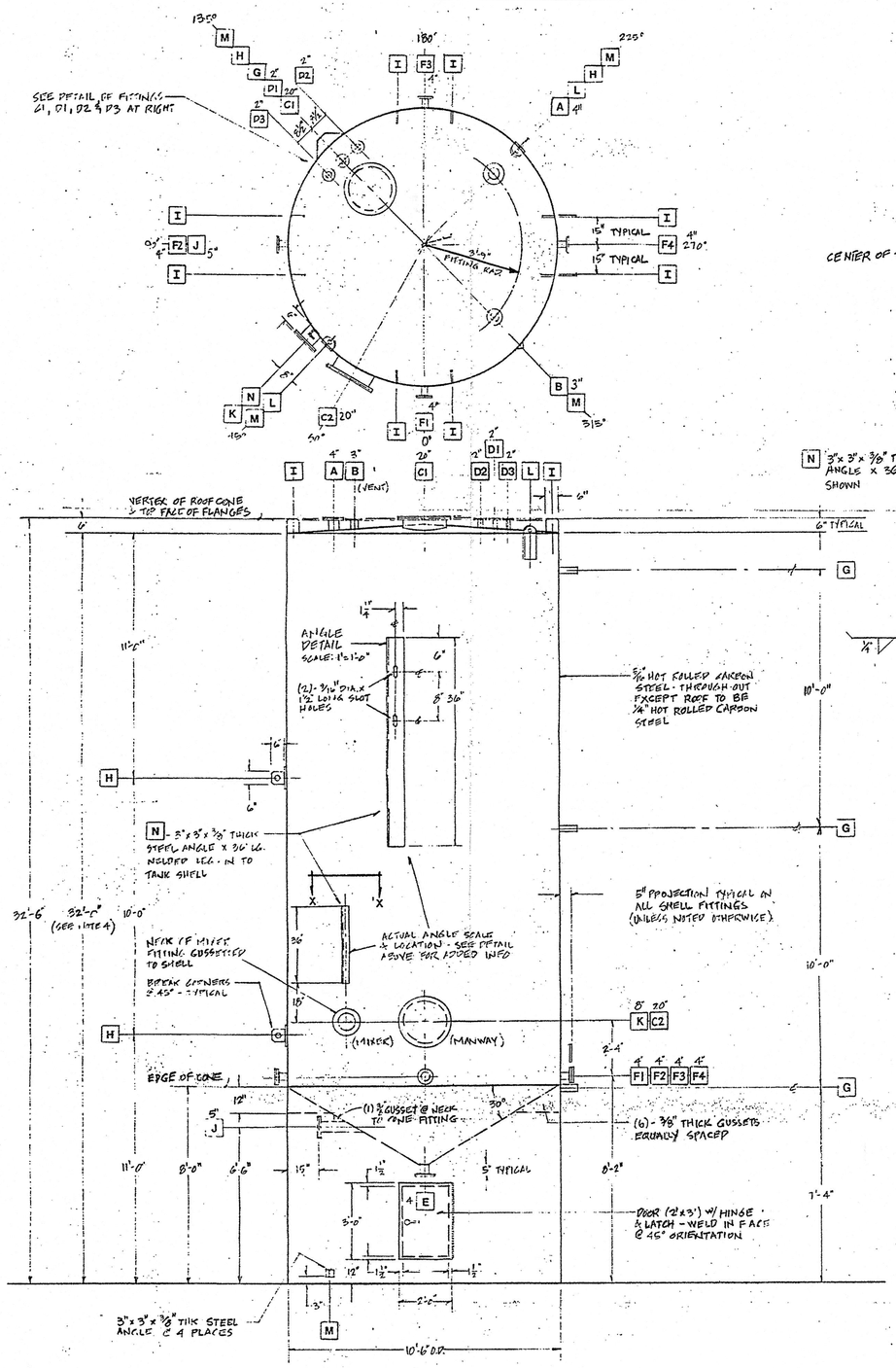

- ELEVATION -

- DO NOT SCALE -

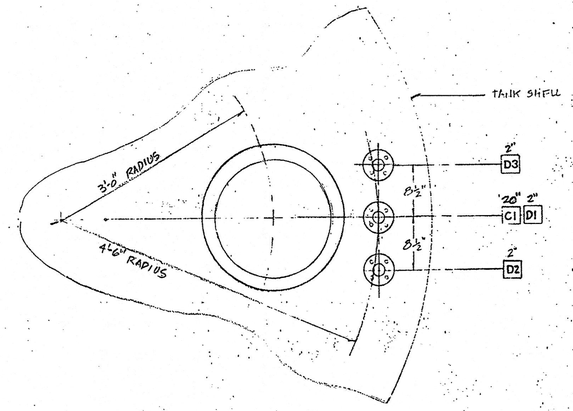

DETAIL - D1, D2, D3, C1

SCALE: 1" = 1'-0"

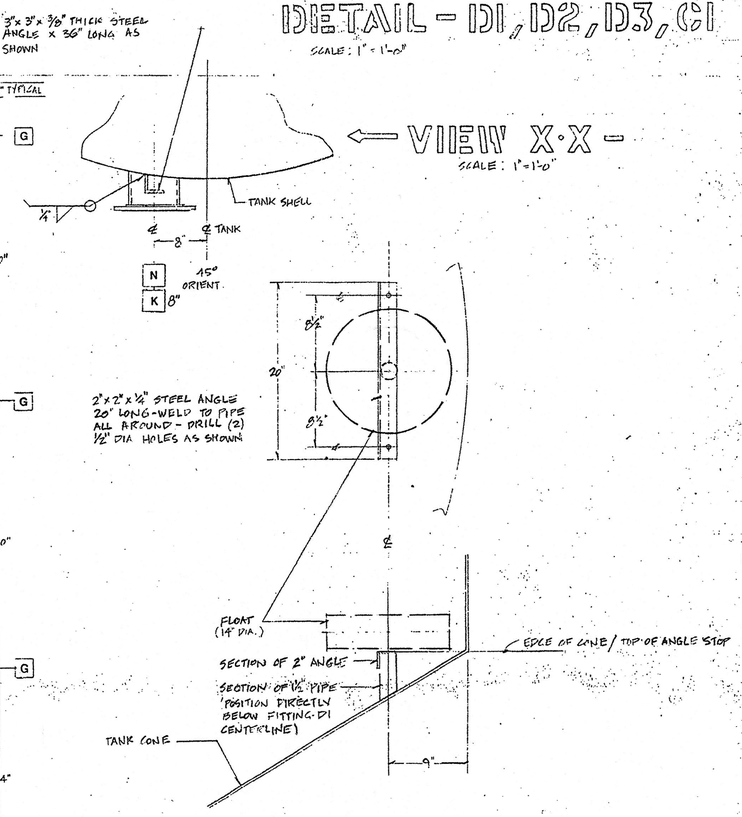

⟸ VIEW X-X ⟹

SCALE: 1" = 1'-0"

DETAIL - FLOAT GUIDE CABLE

SCALE: 1½" = 1'-0"

FITTING & FIXTURE SCHEDULE

MARK	QUANTITY	SIZE/RATING	DESCRIPTION	REMARKS / REFERENCE
A	1	4" - 150#	4" FLANGED CONNECTION	HIGH LEVEL ALARM SYSTEM
B	1	3" - 150#	3" FLANGED CONNECTION	VENT CONNECTION
C	2	STANDARD 20" DIAM.	20" MANWAYS W/BLIND FLG.	FABRICATOR DO NOT SUPPLY GASKETS
D1	1	2" - 150#	2" FLANGED CONNECTION	TAPE GAUGE CONNECTION
D2	1	do	do	SPRING - TENSIONED FLOAT GUIDE FITTING
D3	1	do	do	do
E	1	4" - 150#	4" FLANGED CONNECTION	DRAIN CONNECTION
F	4	4" - 150#	4" FLANGED CONNECTIONS	W/BLIND FLANGES PROCESS CONNECTIONS
G	3	—	GAUGE PIPING SUPPORTS	SUPPLIED BY SAFETI-KLEEN CORP.
H	4	—	6" x 6" x ½" THICK PLATE SIDE LIFTING LUGS	W/ (1) - 1½" DIA HOLE EACH
I	8	—	6" x 6" x ½" THICK PLATE WELDING BRACKETS	USE TO ANCHOR (WELD) WALKWAY PLATFORMS
J	1	5" - 150#	5" FLANGED CONNECTION W/BLIND FLANGE	W/12" DIA. ACCESS HOLE THRU SKIRT (HEATER)
K	1	8" - 150#	8" FLANGED CONNECTION	MIXER CONNECTION (NECK TO BE GUSSETTED TO SHELL)
L	2	—	6" x 12" x ½" THICK PLATE TOP LIFTING LUGS	W/(1) - 1½" DIA HOLE EACH
M	4	—	3" x 3" x ⅜" THICK STEEL ANGLE x 3' LONG	~~TANK [illegible] 45° [illegible]~~
N	1	—	3" x 3" x ⅜" THICK STEEL ANGLE x 36" LONG	MIXER STAND BLIND FLANGE MOUNTING BRACKET

- NOTES -

1. DESIGN, FABRICATION, SURFACE FINISH & TESTING SHALL MEET OR EXCEED THE MINIMUM REQUIREMENTS OF:
   a) U.L. STANDARD 142 FOR CONSTRUCTION OF STEEL ABOVEGROUND ATMOSPHERIC STORAGE TANKS FOR FLAMMABLE & COMBUSTIBLE LIQUIDS
   b) N.A.C.E. STANDARD RP-01-70 FOR CONSTRUCTION OF METAL TANKS TO BE LINED FOR CHEMICAL IMMERSION SERVICE
2. BOLT HOLES OF ALL FLANGES WILL STRADDLE CENTERLINES - EXCEPT THOSE FITTINGS ON THE TANK TOP WHERE BOLT HOLES WILL STRADDLE RADIAL CENTERLINE OR AS SHOWN DETAILED OTHERWISE - ALL BOLTS FOR BLIND FLANGES WILL BE A MINIMUM SAE GRADE 2
3. PAINT NOTE: REFER TO SAFETY-KLEEN STANDARD PAINT SPECIFICATION SHEET OR PURCHASE ORDER
4. FABRICATION TOLERANCE ON SHELL LENGTH TO BE ±1" TYPICAL

EXHIBIT 12

REFERENCE DWG. NO. 85-64201-151

NO.	DESCRIPTION	BY	CHK.	APPR.	DATE
1	REVISED PER NOD	RDK			05-01-91
0	ISSUED FOR PERMITTING	NPA			9-20-90

REVISIONS

TITLE 15000 GAL. STEEL LINED TANK FOR TANK NO'S 32 THRU 37, 39 - THRU 45,56,57,58,62,63,65,66,80, 81.82.85 THRU 88,91,93,101,105,110

CleanHarbors
RECYCLING SERVICES of OHIO, LLC
581 Milliken Drive
Hebron, Ohio 43025

[redacted]

SCALE	DRAWN	CHECKED	DRAWING APPR.	OPERATION APPR.	DATE
SHOWN					

HEBRON, OHIO
RECYCLE CENTER

DRAWING NO. 90-64200-151

REV. 1

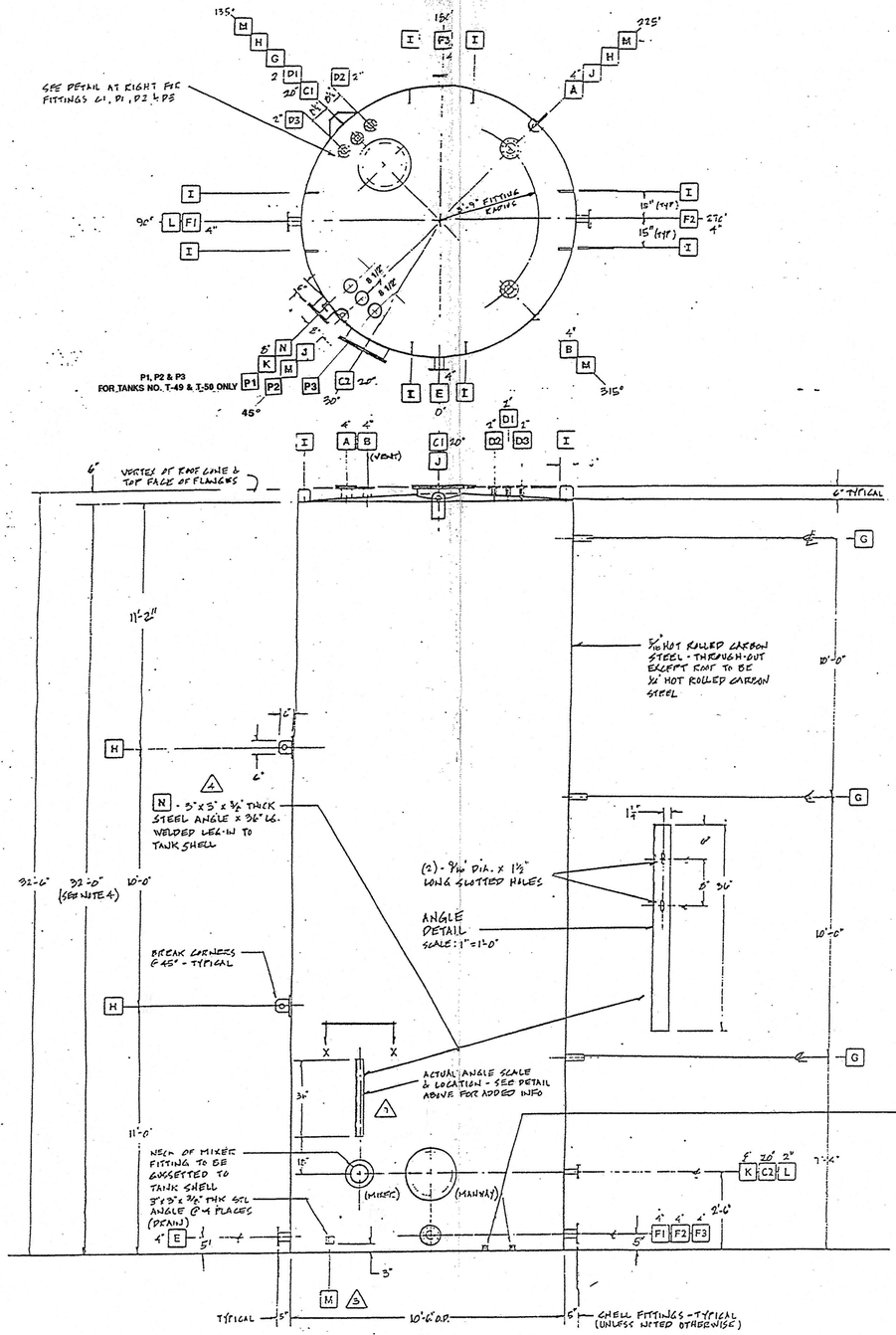

- ELEVATION -

- DO NOT SCALE -

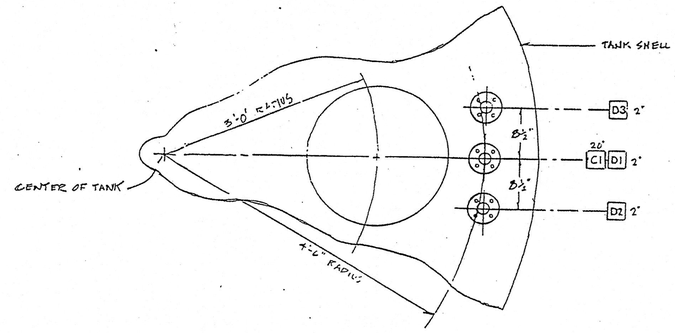

- DETAIL - D1, D2, D3, C1

SCALE

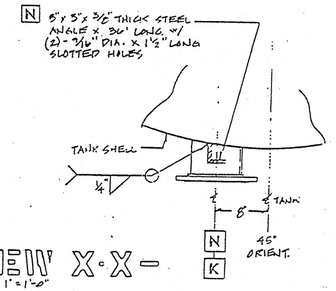

- VIEW X-X -

SCALE: 1" = 1'-0"

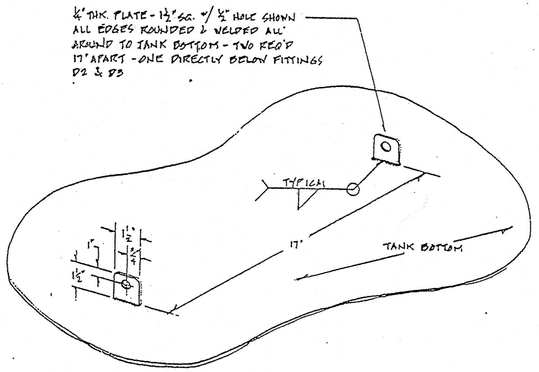

- DETAIL - FLOAT GUIDE CABLE EYES

SCALE: 1 1/2" = 1'-0"

FITTING & FIXTURE SCHEDULE

MARK	QUANTITY	SIZE/RATING	DESCRIPTION	REMARKS / REFERENCE
A	1	4" - 150#	4 FLANGED CONNECTION	HIGH LEVEL ALARM SYSTEM
B	1	4" - 150#	4" FLANGED CONNECTION	VENT CONNECTION
C	2	STANDARD 20" DIAM	20" MANWAY W/ BLIND FLG.	FABRICATOR. DO NOT SUPPLY GASKETS
D1	1	2" - 150#	2" FLANGED CONNECTION	TAPE GAUGE CONNECTION
D2	1	do	do	SPRING-TENSIONED FLOAT GUIDE FITTING
D3	1	do	do	do
E	1	4" - 150#	4" FLANGED CONNECTION	W/ BLIND FLANGE
F	3	4" - 150#	4" FLANGED CONNECTIONS	W/ BLIND FLANGES PROCESS CONNECTIONS
G	3	—	GAUGE PIPING SUPPORTS	SUPPLIED BY SAFETY KLEEN CORP.
H	4	—	6" x 6" x 1/2" THICK PLATE SIDE LIFTING LUGS	W/ (1) 1 1/2 DIA HOLE EACH
I	8	—	6" x 6" x 1/2" THICK PLATE WELDING BRACKETS	USE TO ANCHOR (WELD) WALKWAY PLATFORMS.
J	2	—	6" x 12" x 1/2" THICK PLATE TOP LIFTING LUGS	W/ (1) - 1 1/2" DIA HOLE EACH
K	1	8" - 150#	8" FLANGED CONNECTION	MIXER CONNECTION (NECK TO BE GUSSETTED TO SHELL) W/ BLIND FLANGE.
L	1	2" - 150#	2 FLANGED CONNECTION	SPARE W/ BLIND FLANGE
M	4	—	3" x 3" x 3/8" THICK STEEL ANGLE x 3" LONG	TANK ANCHORING CLIPS
N	1	—	3" x 3" x 3/8" THICK STEEL ANGLE x 36" LONG	MIXER SEAL FLUID TANK MOUNTING BRACKET
P	3	2"-150#	2" FLANGED CONNECTION	TAPE GAUGE CONNECTION

- NOTES -

1. DESIGN, FABRICATION, SURFACE FINISH & TESTING SHALL MEET OR EXCEED THE MINIMUM REQUIREMENTS OF:
   a) U.L. STANDARD 142 FOR CONSTRUCTION OF STEEL ABOVEGROUND ATMOSPHERIC STORAGE TANKS FOR FLAMMABLE & COMBUSTIBLE LIQUIDS, AND,
   b) N.A.C.E. STANDARD RP-01-74 FOR CONSTRUCTION OF METAL TANKS TO BE LINED FOR CHEMICAL IMMERSION SERVICE
2. BOLT HOLES OF ALL FLANGES WILL STRADDLE CENTERLINES - EXCEPT THOSE FITTINGS ON THE TANK TOP WHERE BOLT HOLES WILL STRADDLE RADIAL CENTERLINE OR AS SHOWN DETAILED OTHERWISE - ALL BOLTS FOR BLIND FLANGES WILL BE A MINIMUM SAE GRADE 5
3. PAINT NOTE: REFER TO SAFETY-KLEEN STANDARD PAINT SPECIFICATION SHEET OR PURCHASE ORDER.
4. FABRICATION TOLERANCE ON SHELL LENGTH TO BE ±1" TYPICAL

RCRA PART B PERMIT DRAWING

THIS DRAWING WAS MADE FROM DWG. 88-64200-152

REV	DESCRIPTION	BY	DATE
1	REVISED PER NOD	RDK	5-7-91
0	ISSUED FOR PERMITTING	NPA	8/4/86

EXHIBIT NO. 13

REF. DWG. NO. 85-64201-152

CleanHarbors
RECYCLING SERVICES of OHIO, LLC
581 Milliken Drive
Hebron, Ohio 43025

20,000 GAL. STEEL TANK
FOR TANK NO'S 49,50, 98

SHOWN: REVISIONS
DATE: 11-16-86
DRAWN: NW

HEBRON, OHIO RECYCLE CENTER

90-64200-152 | 1

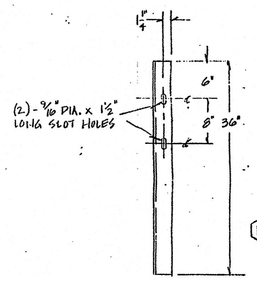

ANGLE DETAIL
SCALE: 1" = 1'-0"
(2) REQUIRED - (1) EACH ABOVE FITTINGS U1 & U2

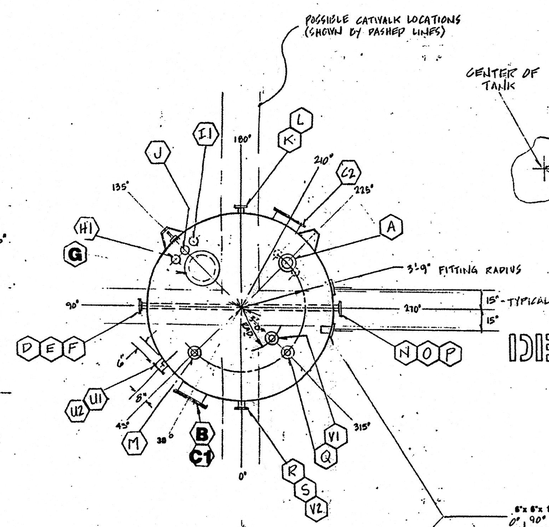

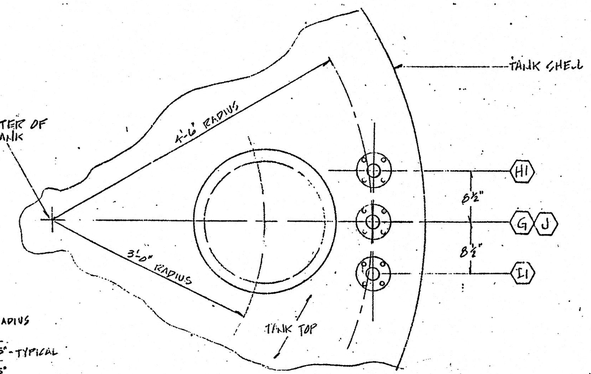

DETAIL - FITTINGS H1, I1, G, J
SCALE: ¾" = 1'-0"

NOTE: FITTINGS H2 & I2 ARE BOTH 8½" O.C. FROM & IN LINE W/ FITTING A BUT ARE TO BE IN UPPER CONE & ON A 3'-9" FITTING RADIUS

- VIEW X-X →
SCALE: 1" = 1'-0"

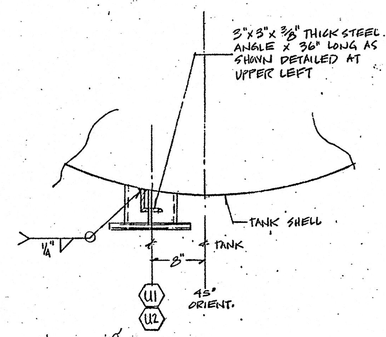

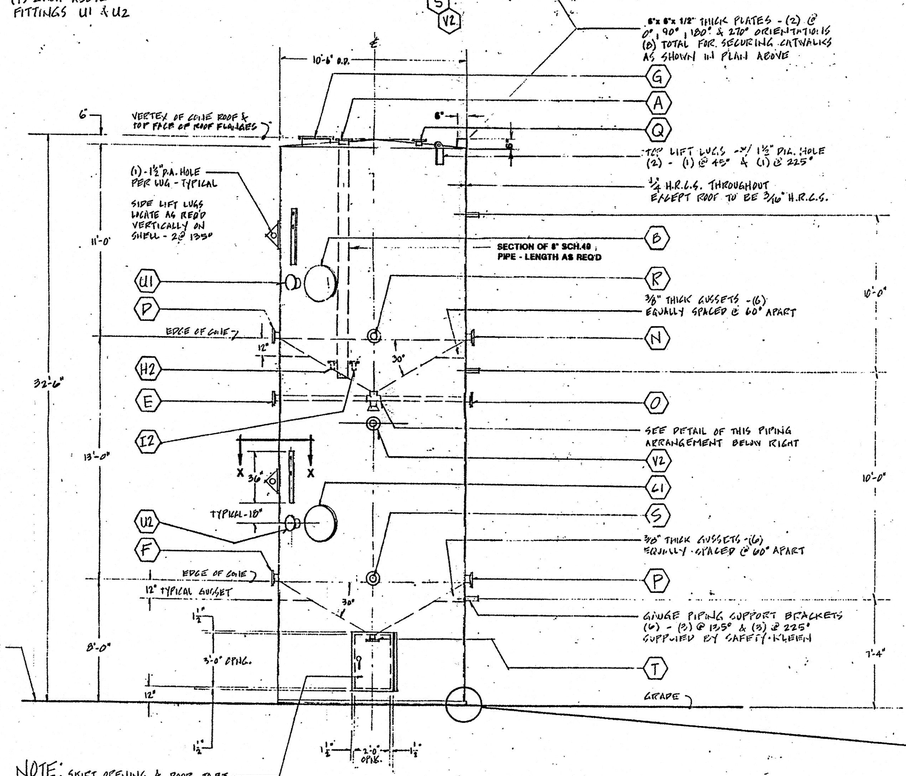

NOTE: SKIRT OPENING & DOOR TO BE LOCATED @ 135° ORIENTATION

- ELEVATION -
-NOT SCALE-
(SEE PLAN ABOVE FOR TRUE ORIENTATION)

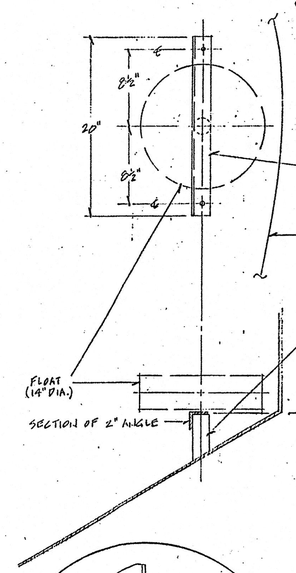

- PIPING DETAIL -
SCALE: ½" = 1'-0"

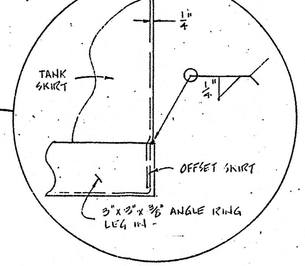

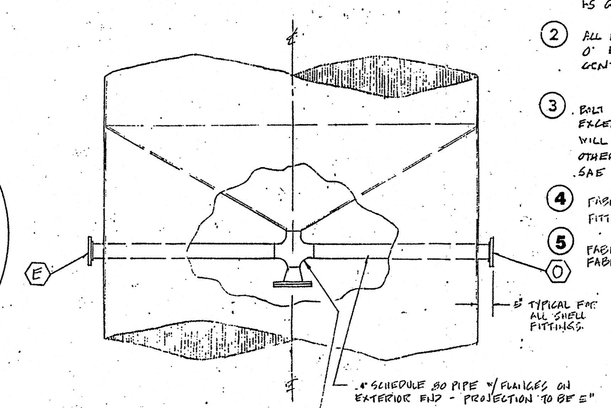

REF DWG 85-64201-153

FITTING & FIXTURE SCHEDULE

MARK	QUANTITY	ORIENTATION	ELEVATION	SIZE	DESCRIPTION	TYPE	REMARKS
A	1	225°	TANK TOP	8"	8" FLANGED CONNECTION	150#	GAUGE & VENT CONNECTION FOR LOWER COMPARTMENT
B	1	30°	23'-6"	20"	MANWAY W/ BLIND FLANGE	STD.	FABRICATOR: DO NOT SUPPLY GASKETS
C	2	30° 210°	10'-6"	20"	MANWAY W/ BLIND FLANGE	STD.	FABRICATOR: DO NOT SUPPLY GASKETS
D	1	90°	21'-3"	4"	4" FLANGED CONNECTION	150#	—
E	1	90°	SEE DETAIL	4"	4" FLANGED CONNECTION	—	SEE PIPING DETAIL BELOW FOR INFORMATION
F	1	90°	8'-3"	4"	4" FLANGED CONNECTION	150#	—
G	1	120°	TANK TOP	20"	MANWAY W/ BLIND FLANGE	STD.	FABRICATOR: DO NOT SUPPLY GASKETS
H	2	135° 225°	TANK TOP UPPER CONE	2"	2" FLANGED CONNECTION	150#	SEE DETAILS AT LEFT FOR INFORMATION
I	2	135° 225°	TANK TOP UPPER CONE	2"	2" FLANGED CONNECTION	150#	SEE DETAILS AT LEFT FOR INFORMATION
J	1	135°	TANK TOP	2"	2" FLANGED CONNECTION	150#	GAUGE CONNECTION FOR UPPER COMPARTMENT
K	1	180°	21'-3"	4"	4" FLANGED CONNECTION	150#	—
L	1	180°	8'-3"	4"	4" FLANGED CONNECTION	150#	—
M	1	45°	TANK TOP	4"	4" FLANGED CONNECTION	150#	—
N	1	270°	21'-3"	4"	4" FLANGED CONNECTION	150#	—
O	1	270°	SEE DETAIL	4"	4" FLANGED CONNECTION	150#	SEE PIPING DETAIL BELOW FOR INFORMATION
P	1	270°	8'-3"	4"	4" FLANGED CONNECTION	150#	—
Q	1	315°	TANK TOP	4"	4" FLANGED CONNECTION	150#	—
R	1	0°	21'-3"	4"	4" FLANGED CONNECTION	150#	—
S	1	0°	8'-3"	4"	4" FLANGED CONNECTION	150#	—
T	1	TANK ℄	LOWER CONE	4"	4" FLANGED CONNECTION	150#	—
U	2	45°	10'-6" 23'-6"	8"	8" FLANGED CONNECTION	150#	MIXER CONNECTIONS
V	2	315° 0°	TANK TOP 17'-0"	1"	1" FLANGED CONNECTION	150#	HIGH LEVEL ALARM

- NOTES -

1. FABRICATION OF TANK TO FOLLOW U.L. STANDARD 142 FOR CONSTRUCTION OF STEEL ABOVEGROUND ATMOSPHERE STORAGE TANKS FOR FLAMMABLE & COMBUSTIBLE LIQUIDS AS GUIDELINE FOR THOSE DETAILS THAT APPLY.
2. ALL ELEVATIONS IN TABLE ABOVE ARE MEASURED FROM 0' ELEVATION BASELINE (GRADE) TO FITTING OR FIXTURE CENTERLINE
3. BOLT HOLES OF ALL FLANGES WILL STRADDLE CENTERLINES - EXCEPT THOSE FLANGES ON THE TANK TOP WHERE BOLT HOLES WILL STRADDLE RADIAL CENTERLINE OR AS SHOWN DETAILED OTHERWISE - ALL BOLTS FOR BLIND FLANGES WILL BE A MINIMUM SAE GRADE 3
4. FABRICATOR TO SUPPLY 150# BLIND FLANGES FOR ALL FITTINGS
5. FABRICATION FABRICATION

GTH TO BE ±1" TYPICAL
HS TO BE ±2" TYPICAL

CleanHarbors
RECYCLING SERVICES of OHIO, LLC
581 Milliken Drive
Hebron, Ohio 43025
60120 PHONE 312/697-8460

EXHIBIT 14

15000 GAL. STEEL PIGGY-BACK TANK
FOR TANK NO'S 48,83,84,89,92,94 & 102

SCALE	SHOWN		REVISIONS	BY	DATE
DATE	1-10-90	0	ISSUED FOR PERMITTING	NPA	9-20-90
DR'N	WLJ	1	REVISED PER NOD	RDK	5-01-91
CKD.		2	ADDED TANK 48 TO TITLE	MBH	042397
APV'D.					

TITLE HEBRON, OHIO RECYCLE CENTER
90-64200-153
REF. 2

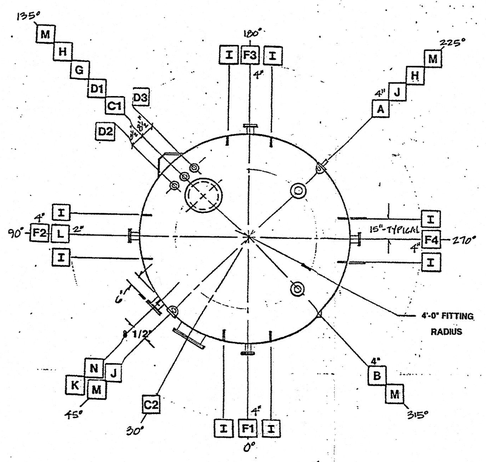

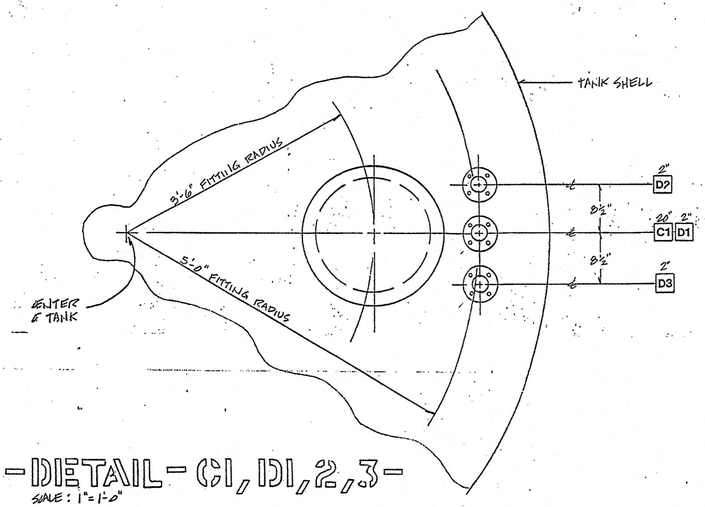

-DETAIL- C1, D1, 2, 3-

SCALE: 1" = 1'-0"

-FITTING AND FIXTURE SCHEDULE-				
MARK	QUANTITY	SIZE & RATING	DESCRIPTION	REMARKS
A	1	4" - 150#	4" FLANGED CONNECTION	HIGH LEVEL ALARM SYSTEM
B	1	4" - 150#	4" FLANGED CONNECTION	VENT CONNECTION
C	2	STANDARD 20" DIA.	20" MANWAY W/ BLIND FLANGE	FABRICATOR: DO NOT SUPPLY GASKETS-
D	3	2" - 150#	2" FLANGED CONNECTION	TAPE/GAUGE CONNECTIONS
E	—	—	—	—
F	4	4" - 150#	4" FLANGED CONNECTION	PROCESS CONNECTIONS W/ BLIND FLANGES
G	3	—	GAUGE PIPING SUPPORTS	SUPPLIED BY SAFETY-KLEEN CORP.
H	4	—	6" x 6" x 1/2" THICK PLATE SIDE LIFTING LUGS	W/ (1) - 1 1/2" DIA. HOLE EACH
I	8	—	6" x 6" x 1/2" THICK PLATE WELDING BRACKETS	USED TO ANCHOR (WELD) WALKWAY PLATFORMS
J	2	—	6" x 12" x 1/2" THICK PLATE TOP LIFTING LUGS	W/ (1) - 1 1/2" DIA. HOLE EACH
K	1	8" - 150#	8" FLANGED CONNECTION	MIXER CONNECTION (NECK TO BE GUSSETTED TO SHELL & W/ BLIND FLANGE)
L	1	2" - 150#	2" FLANGED CONNECTION	SPARE W/ BLIND FLANGE
M	4	—	3" x 3" x 3/8" THICK STEEL ANGLE x 3" LONG	TANK ANCHORING CLIPS
N	1	—	3" x 3" x 3/8" THICK STEEL ANGLE x 36" LONG	MIXER SEAL FLUID TANK MOUNTING BRACKET

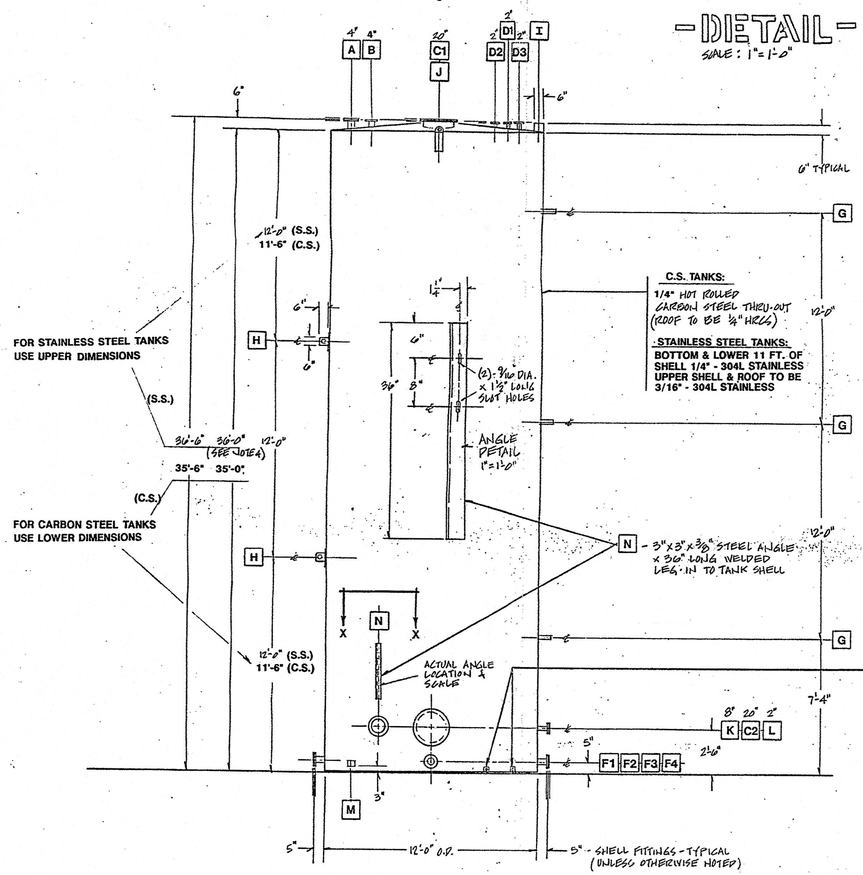

-ELEVATION-

—DO NOT SCALE—

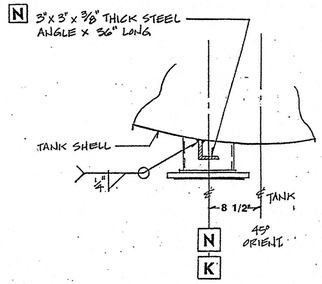

-VIEW X·X-

SCALE: 1" = 1'-0"

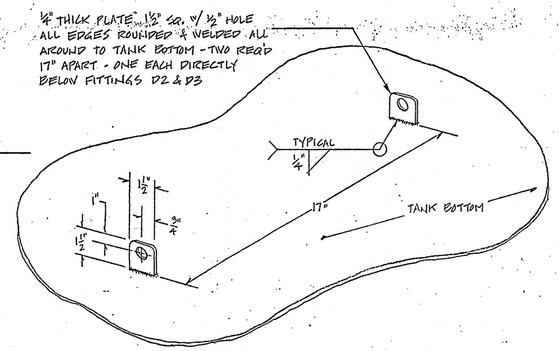

-DETAIL- (FLOAT GUIDE CABLE EYES)

SCALE: 1 1/2" = 1'-0"

-NOTES-

1. DESIGN, FABRICATION, SURFACE FINISH & TESTING SHALL MEET OF EXCEED THE MINIMUM REQUIREMENTS OF:
   a) U.L. STANDARD 142 FOR CONSTRUCTION OF STEEL ABOVEGROUND ATMOSPHERIC STORAGE TANKS FOR FLAMMABLE & COMBUSTIBLE LIQUIDS, AND,
   b) N.A.C.E. STANDARD RP-01-78 FOR CONSTRUCTION OF METAL TANKS TO BE LINED FOR CHEMICAL IMMERSION SERVICE
2. BOLT HOLES OF ALL FLANGES WILL STRADDLE CENTERLINES - EXCEPT THOSE FITTINGS ON THE TANK TOP WHERE BOLT HOLES WILL STRADDLE RADIAL CENTERLINE OR AS SHOWN DETAILED OTHERWISE - ALL BOLTS FOR BLIND FLANGES WILL BE A MINIMUM OF SAE GRADE 3 -
3. PAINT NOTE: REFER TO SAFETY-KLEEN STANDARD PAINT SPECIFICATION SHEET OR PURCHASE ORDER
4. FABRICATION TOLERANCE ON SHELL LENGTH TO BE ± 1" - TYPICAL
5. ALL INTERIOR SURFACES SHELL BE CLEANED & PASSIVATED WITH NITRIC ACID IN WATER SOLUTION PER ASTM A380-78 STANDARD RECOMENDED PRACTICE PRIOR TO SHIPMENT (STAINLESS STEEL TANKS ONLY)

[redacted]

REFERENCE DWG NO. 85-64201-154

REV	DESCRIPTION	BY	DATE
1	REVISED PER NOD	RDK	5-01-91
0	ISSUED FOR PERMITTING	WLJ	5-21-90

CleanHarbors
RECYCLING SERVICES of OHIO, LLC
581 Milliken Drive
Hebron, Ohio 43025
60120 PHONE 312/697-8460

EXHIBIT 15

30000 GAL. C.S. & S.S. TANKS
STEEL TANK NO'S 51,52,53,59,60,61,67,68 & 69
STAINLESS STEEL TANK NO'S 106,107,111 & 112

SCALE 1/4" = 1'-0" | REVISIONS | BY | DATE
DATE 11.12.82
DR'N WLJ CKD.
APV'D.
TITL HEBRON, OHIO RECYCLE CENTER
90-64200-154
REV 1

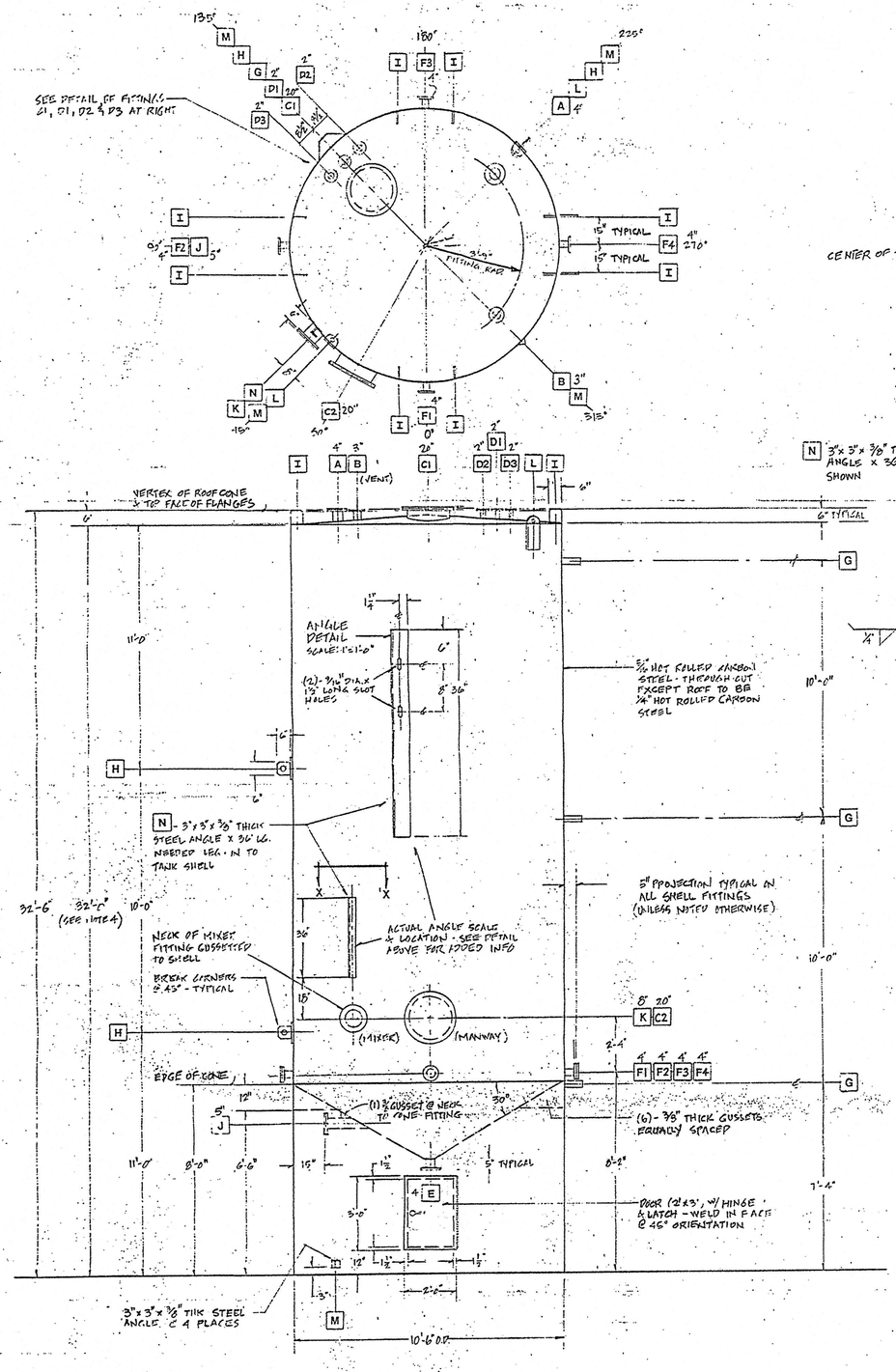

-ELEVATION-

- DO NOT SCALE -

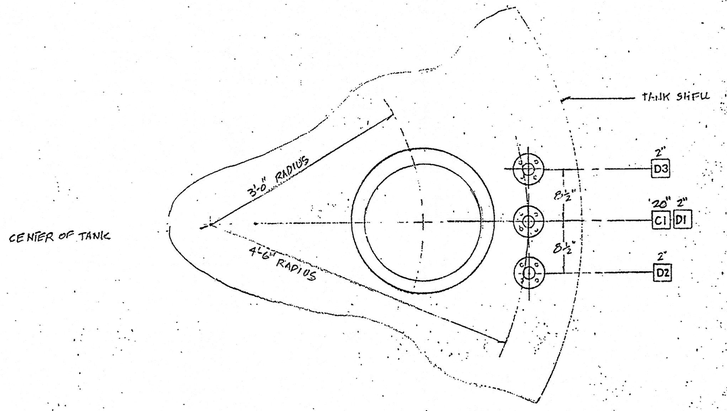

DETAIL - D1, D2, D3, C1

SCALE: 1" = 1'-0"

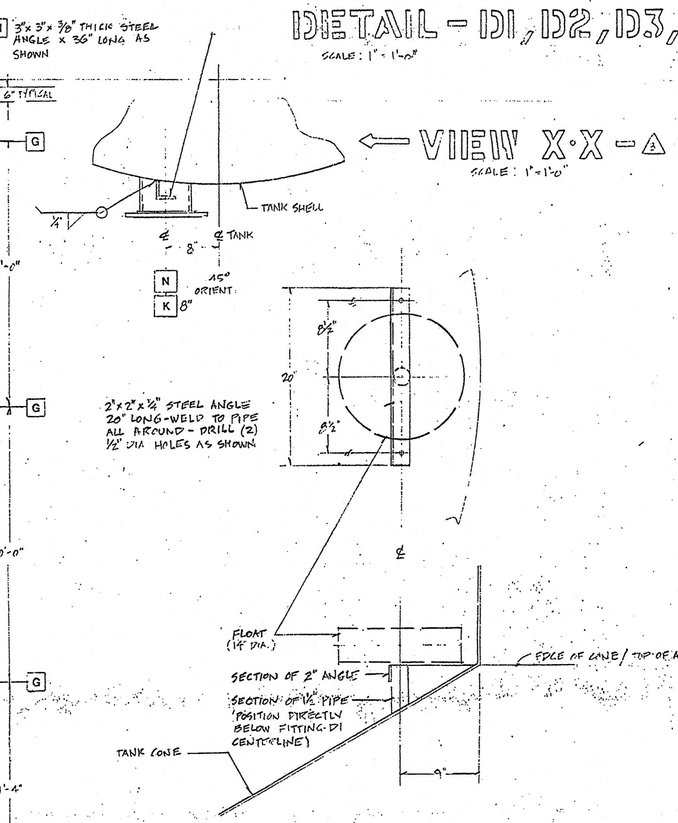

← VIEW X-X - 3

SCALE: 1" = 1'-0"

DETAIL - FLOAT GUIDE CABLE

SCALE: 1½" = 1'-0"

FITTING & FIXTURE SCHEDULE

MARK	QUANTITY	SIZE/RATING	DESCRIPTION	REMARKS, REFERENCE
A	1	4" - 150#	4" FLANGED CONNECTION	HIGH LEVEL ALARM SYSTEM
B	1	3" - 150#	3" FLANGED CONNECTION	VENT CONNECTION
C	2	STANDARD 20" DIAM.	20" MANWAYS w/BLIND FLG.	FABRICATOR DO NOT SUPPLY GASKETS
D1	1	2" - 150#	2" FLANGED CONNECTION	TAPE GAUGE CONNECTION
D2	1	do	do	SPRING-TENSIONED FLOAT GUIDE FITTING
D3	1	do	do	do
E	1	4" - 150#	4" FLANGED CONNECTION	DRAIN CONNECTION
F	4	4" - 150#	4" FLANGED CONNECTIONS	w/BLIND FLANGES PROCESS CONNECTIONS
G	3	—	~~ROOF RAFTER SUPPORTS~~	SUPPLIED BY SAFETI-KLEEN CORP.
H	4	—	6"x6"x½" THICK PLATE SIDE LIFTING LUGS	w/ (1) - 1½" DIA HOLE EACH
I	8	—	6"x6"x½" THICK PLATE WELDING BRACKETS	USE TO ANCHOR (WELD) WALKWAY PLATFORMS
J	1	5" - 150#	5" FLANGED CONNECTION w/BLIND FLANGE	w/12" DIA. ACCESS HOLE THRU SKIRT (HEATER)
K	1	8" - 150#	8" FLANGED CONNECTION	MIXER CONNECTION (NECK TO BE GUSSETTED TO SHELL)
L	2	—	6"x12"x½" THICK PLATE TOP LIFTING LUGS	w/(1) - 1½" DIA HOLE EACH
M	4	—	3"x3"x3/8" THICK STEEL ANGLE x 3" LONG	~~TANK [illegible]~~
N	1	—	3"x3"x3/8" THICK STEEL ANGLE x 36" LONG	MIXER TOTAL FLUID TANK MOUNTING BRACKET

-NOTES-

1. DESIGN, FABRICATION, SURFACE FINISH & TESTING SHALL MEET OR EXCEED THE MINIMUM REQUIREMENTS OF:
   a) U.L. STANDARD 142 FOR CONSTRUCTION OF STEEL ABOVEGROUND ATMOSPHERIC STORAGE TANKS FOR FLAMMABLE & COMBUSTIBLE LIQUIDS
   b) N.A.C.E. STANDARD RP-01-78 FOR CONSTRUCTION OF METAL TANKS TO BE LINED FOR CHEMICAL IMMERSION SERVICE
2. BOLT HOLES OF ALL FLANGES WILL STRADDLE CENTERLINES - EXCEPT THOSE FITTINGS ON THE TANK TOP WHERE BOLT HOLES WILL STRADDLE RADIAL CENTERLINE OR AS SHOWN DETAILED OTHERWISE - ALL BOLTS FOR BLIND FLANGES WILL BE A MINIMUM OF GRADE 2
3. PAINT NOTE: REFER TO SAFETI-KLEEN STANDARD PAINT SPECIFICATION SHEET OR PURCHASE ORDER
4. FABRICATION TOLERANCE ON SHELL LENGTH TO BE ±1" TYPICAL

EXHIBIT 16

REFERENCE DWG. NO. 85-64201-155

NO.	DESCRIPTION	BY	CHK.	APPR.	DATE
1	REVISED PER NOD	RDK			05-01-91
0	ISSUED FOR PERMITTING	NPA			9-20-90

REVISIONS

15000 gal. STAINLESS STEEL TANK

FOR TANK NO'S

90.95.100.103.104.108.109,113 & 114

CleanHarbors
RECYCLING SERVICES of OHIO, LLC
581 Milliken Drive
Hebron, Ohio 43025

[redacted]

NG APPR. | OPERATION APPR. | DATE

SCALE: SHOWN

HEBRON, OHIO
RECYCLE CENTER

DRAWING NO. 90-64200-155

REV. 1

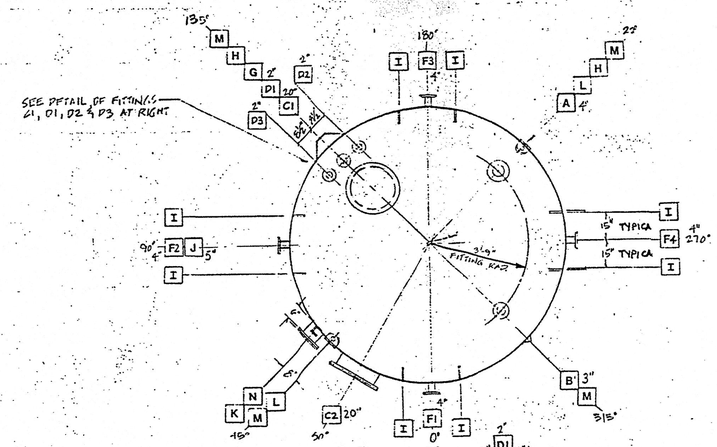

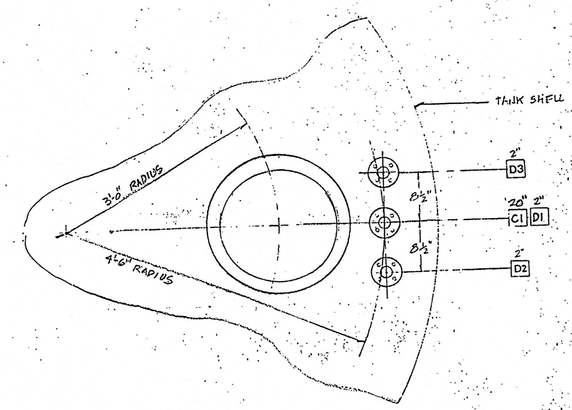

DETAIL - D1, D2, D3, C1

SCALE: 1" = 1'-0"

FITTING & FIXTURE SCHEDULE

MARK	QUANTITY	SIZE/RATING	DESCRIPTION	REMARKS / REFERENCE
A	1	4" - 150#	4" FLANGED CONNECTION	HIGH LEVEL ALARM SYSTEM
B	1	3" - 150#	3" FLANGED CONNECTION	VENT CONNECTION
C	2	STANDARD 20" DIAM.	20" MANWAYS W/BLIND FLG.	FABRICATOR: DO NOT SUPPLY GASKETS
D1	1	2" - 150#	2" FLANGED CONNECTION	TAPE GAUGE CONNECTION
D2	1	do	do	SPRING-TENSIONED FLOAT GUIDE FITTING
D3	1	do	do	do
E	1	4" - 150#	4" FLANGED CONNECTION	DRAIN CONNECTION
F	4	4" - 150#	4" FLANGED CONNECTIONS	W/BLIND FLANGES PROCESS CONNECTIONS
G	3		GAUGE PIPING SUPPORTS	SUPPLIED BY SAFETI-KLEEN CORP.
H	4	—	6" x 6" x ½" THICK PLATE SIDE LIFTING LUGS	W/ (1) - 1½" DIA HOLE EACH
I	8	—	6" x 6" x ½" THICK PLATE WELDING BRACKETS	USE TO ANCHOR (WELD) WALKWAY PLATFORMS
J	1	5" - 150#	5" FLANGED CONNECTION W/ BLIND FLANGE	W/12" DIA ACCESS HOLE THRU SKIRT (HEATER)
K	1	8" - 150#	8" FLANGED CONNECTION	MIXER CONNECTION (NECK TO BE GUSSETTED TO SHELL)
L	2	—	6" x 12" x ½" THICK PLATE TOP LIFTING LUGS	W/(1) - 1½" DIA HOLE EACH
M	4	—	3" x 3" x 3/8" THICK STEEL ANGLE x 3' LONG	TANK [illegible] STEEL [illegible]
N	1	—	3" x 3" x 3/8" THICK STEEL ANGLE x 36" LONG	MIXER SEAL FLUID TANK MOUNTING BRACKET

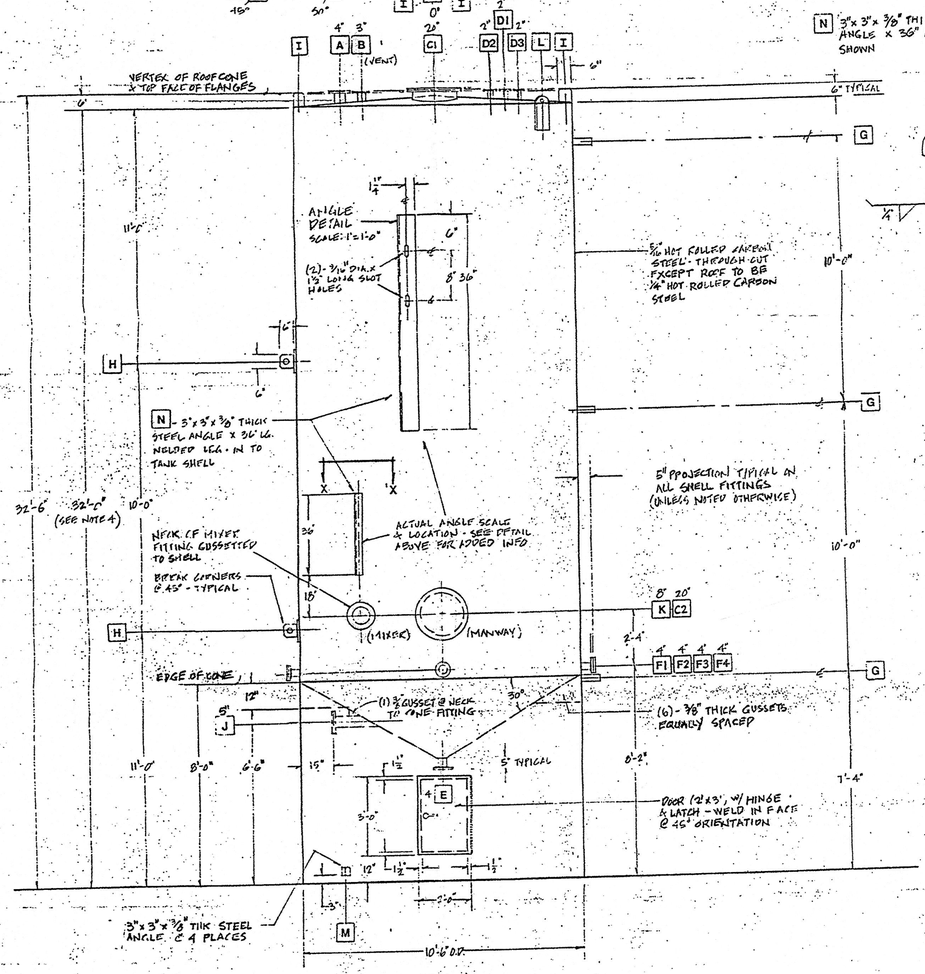

- ELEVATION -

- DO NOT SCALE -

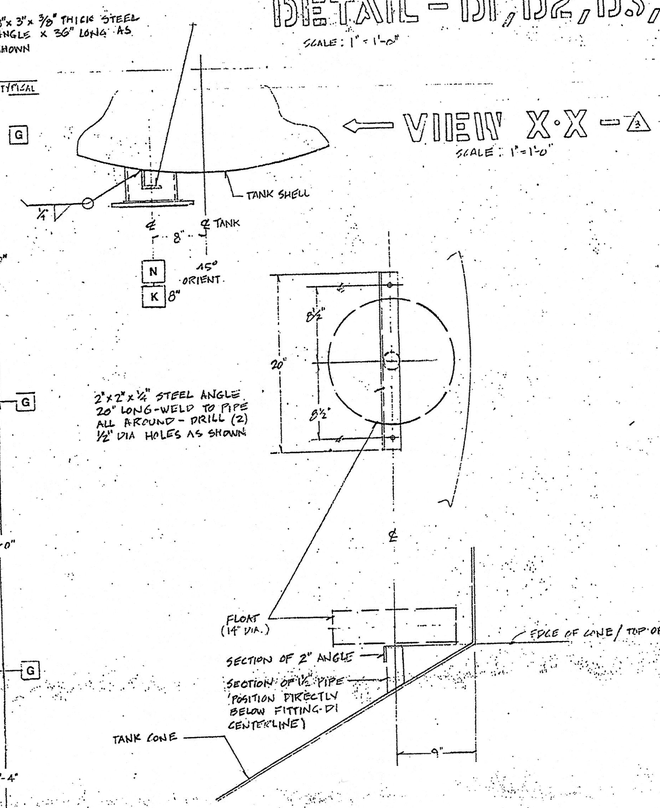

VIEW X-X

SCALE: 1" = 1'-0"

DETAIL - FLOAT GUIDE CABLE

SCALE: 1½" = 1'-0"

- NOTES -

1. DESIGN, FABRICATION, SURFACE FINISH & TESTING SHALL MEET OR EXCEED THE MINIMUM REQUIREMENTS OF:
   a) U.L. STANDARD 142 FOR CONSTRUCTION OF STEEL ABOVEGROUND ATMOSPHERIC STORAGE TANKS FOR FLAMMABLE & COMBUSTIBLE LIQUIDS
   b) N.A.C.E. STANDARD RP-01-78 FOR CONSTRUCTION OF METAL TANKS TO BE LINED FOR CHEMICAL IMMERSION SERVICE
2. BOLT HOLES OF ALL FLANGES WILL STRADDLE CENTERLINES - EXCEPT THOSE FITTINGS ON THE TANK TOP WHERE BOLT HOLES WILL STRADDLE RADIAL CENTERLINE OR AS SHOWN DETAILED OTHERWISE - ALL BOLTS FOR BLIND FLANGES WILL BE A MINIMUM SAE GRADE 3
3. PAINT NOTE: REFER TO SAFETI-KLEEN STANDARD PAINT SPECIFICATION SHEET OR PURCHASE ORDER
4. FABRICATION TOLERANCE ON SHELL LENGTH TO BE ±1" TYPICAL

EXHIBIT 21

REFERENCE DWG. NO. 85-64201-

NO.	DESCRIPTION	BY	CHK.	APPR.	DATE
1	REVISED PER NOD	RDK			5-01-91
0	ISSUED FOR PERMITTING	RDK			12-21-89

REVISIONS

TITLE: **15000 gal. C.S. STORAGE TANK FOR TANK NO'S 38, 203, 204, 205 & 209**

CleanHarbors
RECYCLING SERVICES of OHIO, LLC
581 Milliken Drive
Hebron, Ohio 43025

[redacted]

ENG APPR. | OPERATION APPR. | DATE

SCALE: SHOWN

HEBRON, OHIO
RECYCLE CENTER

DRAWING NO. 90-64200-160

REV. 1

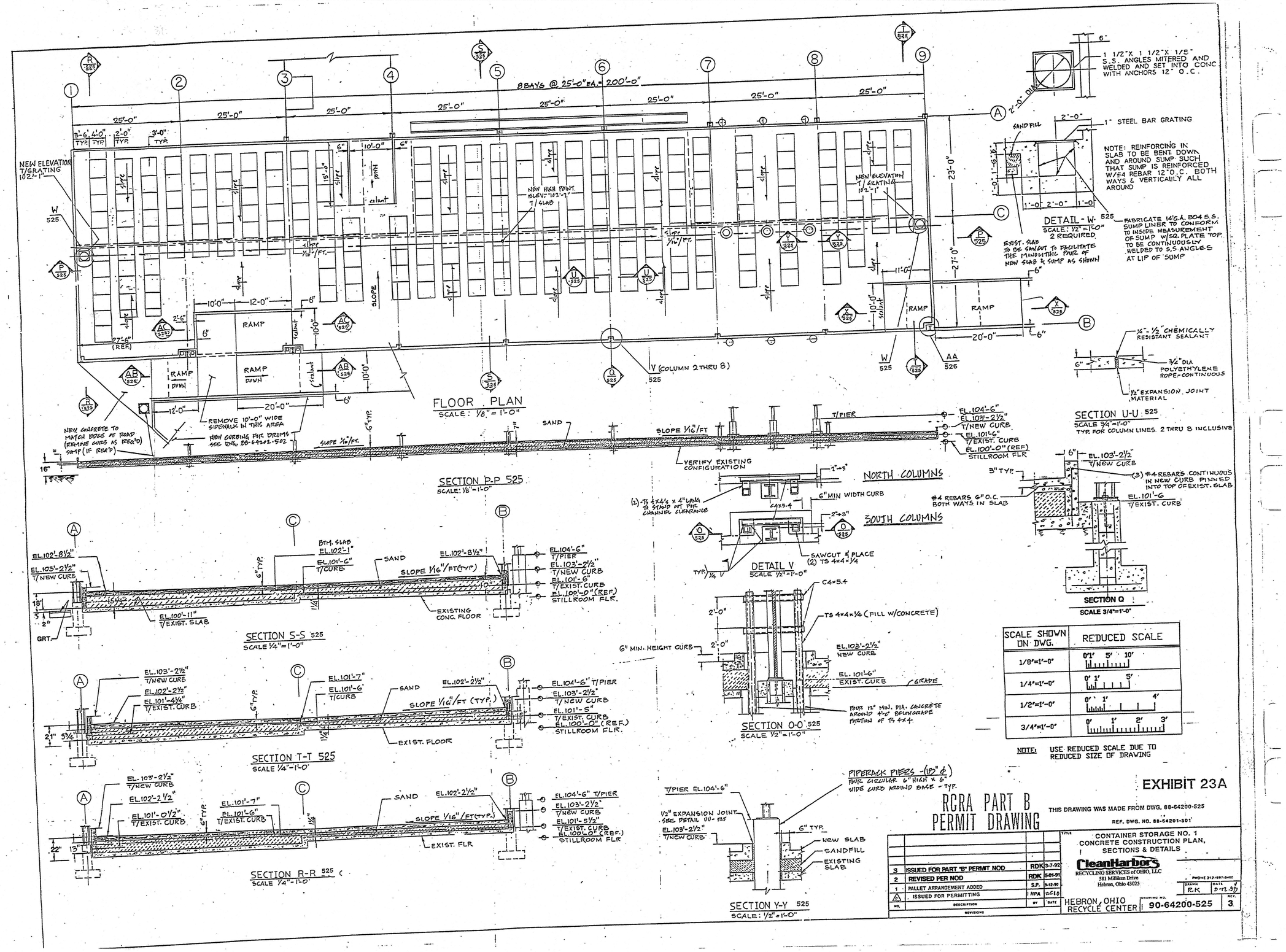
8 BAYS @ 25'-0" EA. = 200'-0"
NEW ELEVATION T/GRATING 102'-1"
NEW HIGH POINT ELEV. 102'-1" T/SLAB
NEW ELEVATION T/GRATING 102'-1"
RAMP
RAMP DOWN
SLOPE
V (COLUMN 2 THRU 8) 525
NEW CONCRETE TO MATCH EDGE OF ROAD (REMOVE CURB AS REQ'D) SLAP (IF REQ'D)
REMOVE 10'-0" WIDE SIDEWALK IN THIS AREA
NEW CURBING FOR DRUMS SEE DWG. 88-64202-502
FLOOR PLAN
SCALE: 1/8" = 1'-0"
1 1/2" X 1 1/2" X 1/8" S.S. ANGLES MITERED AND WELDED AND SET INTO CONC WITH ANCHORS 12" O.C.
SAND FILL
1" STEEL BAR GRATING
NOTE: REINFORCING IN SLAB TO BE BENT DOWN AND AROUND SUMP SUCH THAT SUMP IS REINFORCED W/#4 REBAR 12" O.C. BOTH WAYS & VERTICALLY ALL AROUND
DETAIL - W 525
SCALE: 1/2" = 1'-0"
2 REQUIRED
EXIST. SLAB TO BE SAWCUT TO FACILITATE THE MONOLITHIC POUR OF NEW SLAB & SUMP AS SHOWN
FABRICATE 14 GA. 304 S.S. SUMP LINER TO CONFORM TO INSIDE MEASUREMENT OF SUMP W/SQ. PLATE TOP TO BE CONTINUOUSLY WELDED TO S.S. ANGLES AT LIP OF SUMP
1/4" - 1/2" CHEMICALLY RESISTANT SEALANT
3/4" DIA POLYETHYLENE ROPE - CONTINUOUS
1/2" EXPANSION JOINT MATERIAL
SECTION U-U 525
SCALE 3/4" = 1'-0"
TYP. FOR COLUMN LINES 2 THRU 8 INCLUSIVE
SECTION P-P 525
SCALE: 1/8" = 1'-0"
VERIFY EXISTING CONFIGURATION
NORTH COLUMNS
SOUTH COLUMNS
DETAIL V
SCALE 1/2" = 1'-0"
SAWCUT & PLACE (2) TS 4x4x1/4
SECTION Q
SCALE 3/4" = 1'-0"
#4 REBARS 6" O.C. BOTH WAYS IN SLAB
(3) #4 REBARS CONTINUOUS IN NEW CURB PINNED INTO TOP OF EXIST. SLAB
SECTION S-S 525
SCALE 1/4" = 1'-0"
EXISTING CONC. FLOOR
SECTION T-T 525
SCALE 1/4" = 1'-0"
EXIST. FLOOR
SECTION R-R 525
SCALE 1/4" = 1'-0"
EXIST. FLR
SECTION O-O 525
SCALE 1/2" = 1'-0"
6" MIN. HEIGHT CURB
TS 4x4x1/4 (FILL W/CONCRETE)
POUR 12" MIN. DIA. CONCRETE AROUND 4x4 BELOW GRADE PORTION OF TS 4x4
PIPERACK PIERS - (18" ϕ) POUR CIRCULAR 6" HIGH x 6" WIDE CURB AROUND BASE - TYP.
SECTION Y-Y 525
SCALE: 1/2" = 1'-0"
NEW SLAB
SANDFILL
EXISTING SLAB
SCALE SHOWN ON DWG. | REDUCED SCALE
1/8"=1'-0" | 0" 1' 5' 10'
1/4"=1'-0" | 0' 1' 5'
1/2"=1'-0" | 0' 1' 4'
3/4"=1'-0" | 0' 1' 2' 3'
NOTE: USE REDUCED SCALE DUE TO REDUCED SIZE OF DRAWING
EXHIBIT 23A
RCRA PART B PERMIT DRAWING
THIS DRAWING WAS MADE FROM DWG. 88-64200-525
REF. DWG. NO. 88-64201-501
3 ISSUED FOR PART "B" PERMIT NOD RDK 3-7-92
2 REVISED PER NOD RDK 5-01-91
1 PALLET ARRANGEMENT ADDED S.P. 9-12-90
A ISSUED FOR PERMITTING NPA 8-6-89
NO. DESCRIPTION BY DATE
REVISIONS
TITLE CONTAINER STORAGE NO. 1 CONCRETE CONSTRUCTION PLAN, SECTIONS & DETAILS
CleanHarbors RECYCLING SERVICES of OHIO, LLC
581 Milliken Drive
Hebron, Ohio 43025
PHONE 317-697-6460
DRAWN R.K. DATE 9-12-89
HEBRON, OHIO RECYCLE CENTER
DRAWING NO. 90-64200-525
REV. 3

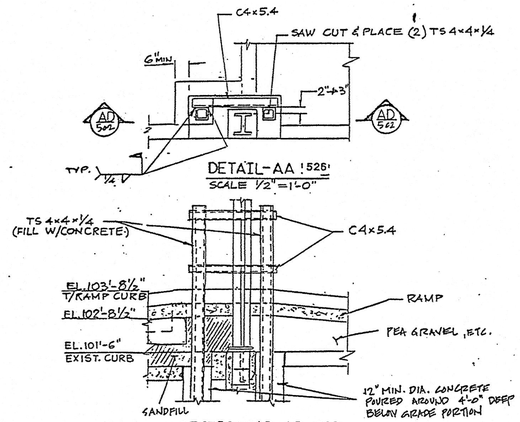

DETAIL-AA '526'
SCALE 1/2" = 1'-0"

SECTION AD-AD '526'
SCALE 1/2" = 1'-0"

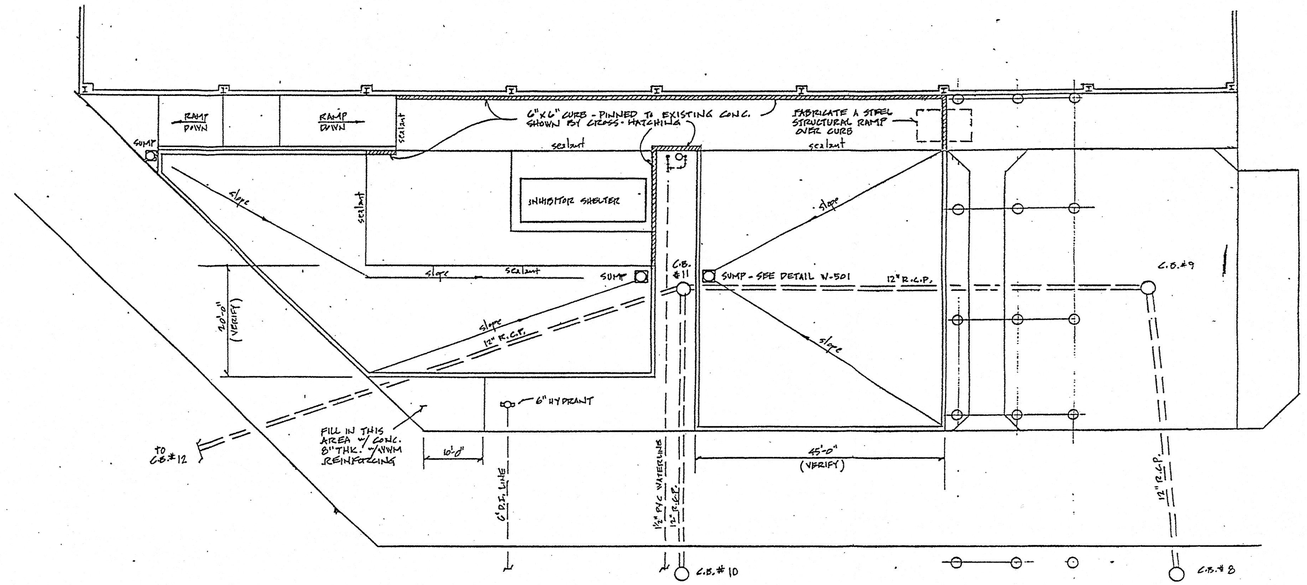

PLAN - LAYOUT OF CLEAN STORAGE AREA
SCALE: 1" = 10'-0"

0 5' 10' 20"

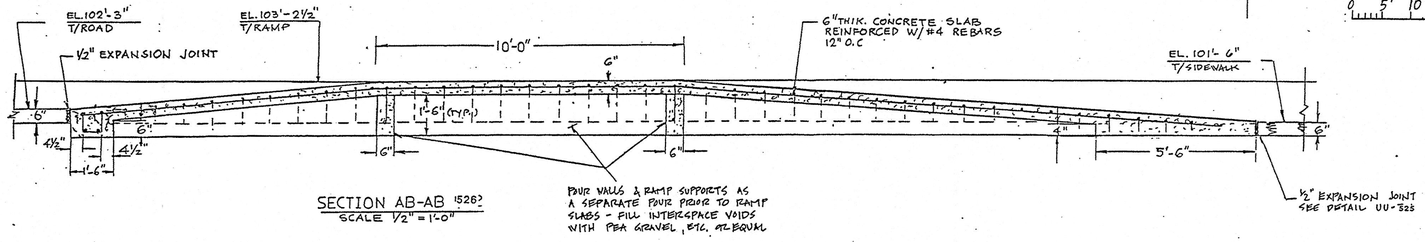

SECTION AB-AB '526'
SCALE 1/2" = 1'-0"

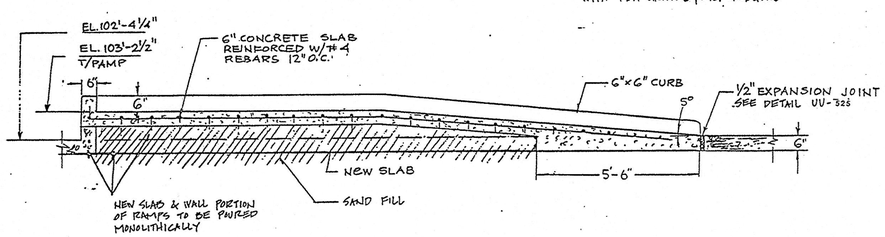

SECTION AC-AC '526'
SCALE: 1/2" = 1'-0"

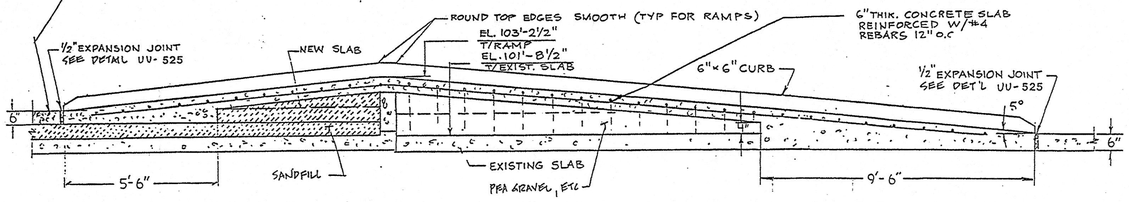

SECTION X-X '526'
SCALE 1/2" = 1'-0"

RCRA PART B
PERMIT DRAWING

EXHIBIT NO. 23B

THIS DRAWING WAS MADE FROM DWG. 88-64200-526

REF. DWG. NO. 88-64202-502

NO.	DESCRIPTION	BY	DATE
1	! ISSUED FOR PERMITTING	NPA	12-6-88

REVISIONS

TITLE: CONTAINER STORAGE NO. 1 CONCRETE CONSTRUCTION PLAN, SECTIONS & DETAIL

CleanHarbors
RECYCLING SERVICES of OHIO, LLC
581 Milliken Drive
Hebron, Ohio 43025
PHONE 614-927-8450

DRAWN: R.K. DATE: 8-12-88

HEBRON, OHIO RECYCLE CENTER

DRAWING NO. 90-64200-526 REV 0

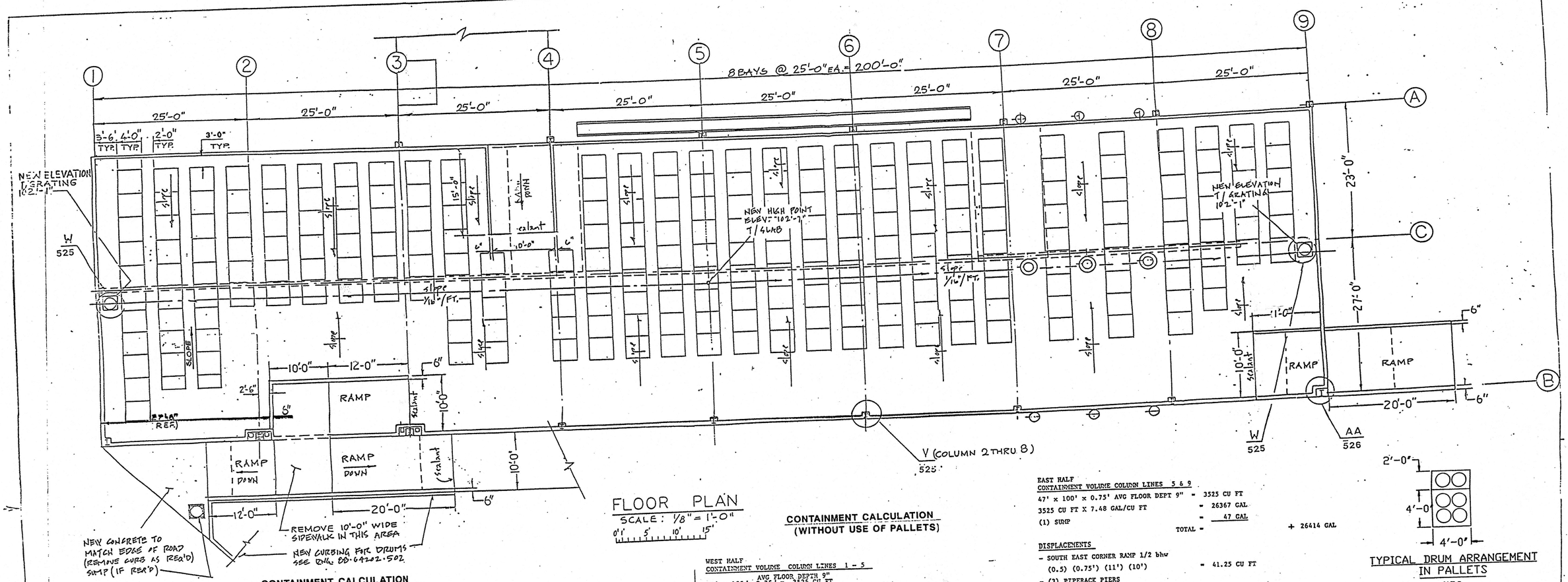

FLOOR PLAN
SCALE: 1/8" = 1'-0"
0' 1' 5' 10' 15'

TYPICAL DRUM ARRANGEMENT IN PALLETS
N.T.S.

CONTAINMENT CALCULATION (WITH PALLETS)

WEST HALF
CONTAINMENT VOLUME COLUMN LINES 1 – 5

AVG FLOOR DEPTH 9"
47' x 100' x 0.75' = 3525 CU FT
3525 CU FT X 7.48 GAL/CU FT = 26367 GAL
1 SUMP = 47 GAL
TOTAL = 26414 GAL

DISPLACEMENTS
- NORTH RAMP = 1/2 bhw
(0.5) (0.75') (15') (10') = 56.25 CU FT
- SOUTH RAMP = 1/ bhw
(0.5) (0.75') (12') (10') = 45.0 CU FT
- RAMP PLATFORM
(0.75) (10') (10') = 75.0 CU FT
TOTAL = 176.25 CU FT

176.25 CU FT X 7.48 GAL/CUT FT = <1319 GAL>

- 120 PALLET POSITIONS X 2.0 CU FT = 240 CU FT
120 PALLETS X 4 DRUMS = 480 DRUM
π (1')^2 (0.25') x 480 DRUMS (3" DRUM DISPLACEMENT) = 377 CU FT
TOTAL = 617 CU FT

517 CU FT X 7.48 GAL/CU FT = <4616 GAL>
NET CONTAINMENT = 20479 GAL

CONTAINMENT VOLUME REQ'D
120 PALLET POSITIONS x 4 DRUM = 480 DRUMS
480 DRUMS X 3 HIGH STACKING = 1440 DRUMS
1440 DRUMS X 55 GAL/DRUM = 79200 GAL
79200 GAL X (0.10) = 7920 GAL REQ'D

SAFETY FACTOR
20479 GAL – 7920 GAL = 12559 GAL EXCESS

EAST HALF
CONTAINMENT VOLUME COLUMN LINES 5 & 9

47' x 100' x 0.75' AVG FLOOR DEPT 9" = 3525 CU FT
3525 CU FT X 7.48 GAL/CU FT = 26367 GAL
(1) SUMP = 47 GAL
TOTAL = 26414 GAL

DISPLACEMENTS
- SOUTH EAST CORNER RAMP 1/2 bhw
(0.5) (0.75') (11') (10') = 41.25 CU FT
- (3) PIPERACK PIERS
π (1.5')^2/4 (0.75') X 3 = 4.0 CU FT
TOTAL = 45.25 CU FT

45.25 CU FT X 7.48 GAL/CU FT = <338.47 GAL>
- 128 PALLET POSITIONS X 2.0 CU FT = 256 CU FT
128 PALLETS X 4 DRUMS = 512 DRUMS
π (1')^2 (0.25') X 512 DRUMS (3" DRUM DISPLACEMENT) = 402 CU FT
TOTAL = 658 CU FT

658 CU FT X 7.48 GAL/CU FT = <4922 GAL>
NET CONTAINMENT = 21153 GAL

CONTAINMENT VOLUME REQ'D
128 PALLET POSITIONS X 4 DRUMS = 512 DRUMS
512 DRUMS X 3 HIGH STACKING = 1536 DRUMS
1536 DRUMS X 55 GAL/DRUM = 84480 GAL
84480 GAL X (0.10) = 8448 GAL REQ'D

SAFETY FACTOR
21153 GAL – 8448 GAL = 12705 GAL EXCESS

CONTAINMENT CALCULATION (WITHOUT USE OF PALLETS)

WEST HALF
CONTAINMENT VOLUME COLUMN LINES 1 – 5

AVG FLOOR DEPTH 9"
47' x 100' x 0.75' = 3525 CU FT
3525 CU FT X 7.48 GAL/CU FT = 26367 GAL
1 SUMP = 47 GAL
TOTAL = 26414 GAL

DISPLACEMENTS
- NORTH RAMP = 1/2 bhw
(0.5) (0.75') (15') (10') = 56.25 CU FT
- SOUTH RAMP = 1/ bhw
(0.5) (0.75') (12') (10') = 45.0 CU FT
- RAMP PLATFORM
(0.75) (10') (10') = 75.0 CU FT
TOTAL = 176.25 CU FT

176.25 CU FT X 7.48 GAL/CUT FT = <1319 GAL>

120 X 4 DRUMS = 480 DRUM
π (1')^2 (.75') X 480 DRUMS (9" DRUM DISPLACEMENT) = 1131 CU FT
TOTAL = 1131 CU FT

1131 CU FT X 7.48 GAL/CU FT = <8460 GAL>
NET CONTAINMENT = 16635 GAL

CONTAINMENT VOLUME REQ'D
480 DRUMS X 3 HIGH STACKING = 1440 DRUMS
1440 DRUMS X 55 GAL/DRUM = 79200 GAL
79200 GAL X (0.10) = 7920 GAL REQ'D

SAFETY FACTOR
16635 GAL – 7920 GAL = 8715 GAL EXCESS

EAST HALF
CONTAINMENT VOLUME COLUMN LINES 5 & 9

47' x 100' x 0.75' AVG FLOOR DEPT 9" = 3525 CU FT
3525 CU FT X 7.48 GAL/CU FT = 26367 GAL
(1) SUMP = 47 GAL
TOTAL = 26414 GAL

DISPLACEMENTS
- SOUTH EAST CORNER RAMP 1/2 bhw
(0.5) (0.75') (11') (10') = 41.25 CU FT
- (3) PIPERACK PIERS
π (1.5')^2/4 (0.75') X 3 = 4.0 CU FT
TOTAL = 45.25 CU FT

45.25 CU FT X 7.48 GAL/CU FT = <338.47 GAL>
128 X 4 DRUMS = 512 DRUMS
π (1')^2 (.75') X 512 DRUMS (9" DRUM DISPLACEMENT) = 1206 CU FT
TOTAL = 1206 CU FT

1206 CU FT X 7.48 GAL/CU FT = <9021 GAL>
NET CONTAINMENT = 17055 GAL

CONTAINMENT VOLUME REQ'D
128 x 4 DRUMS = 512 DRUMS
512 DRUMS X 3 HIGH STACKING = 1536 DRUMS
1536 DRUMS X 55 GAL/DRUM = 84480 GAL
84480 GAL X (0.10) = 8448 GAL REQ'D

SAFETY FACTOR
17055 GAL – 8448 GAL = 8607 GAL EXCESS

EXHIBIT 23C

THIS DRAWING CONTAINS INFORMATION PROPRIETARY TO SAFETY-KLEEN CORP. ANY REPRODUCTION, DISCLOSURE OR USE OF THIS DRAWING IS EXPRESSLY PROHIBITED EXCEPT BY SAFETY-KLEEN OR AS SAFETY-KLEEN MAY AGREE IN WRITING.

NO	DESCRIPTION	BY	CHK.	APPR	DATE
2	REVISED PER NOD 1994	MBH		T.S.	101794
1	ISSUED FOR PART "B" PERMIT NOD	RDK			03-07-92
0	ISSUED FOR PART "B" PERMIT	S.P.			9-18-90

REVISIONS

TITLE
CONTAINER STORAGE AREA NO. 1
DRUM ARRANGEMENT

CleanHarbors
RECYCLING SERVICES of OHIO, LLC
581 Milliken Drive
Hebron, Ohio 43025

[redacted]

SCALE	DRAWN	CHECKED	ENGINEERING APPR.	OPERATION APPR.	DATE
AS NOTED	R.K.				8-12-08

HEBRON, OHIO
RECYCLE CENTER

DRAWING NO. 90-64200-202 | REV. 2

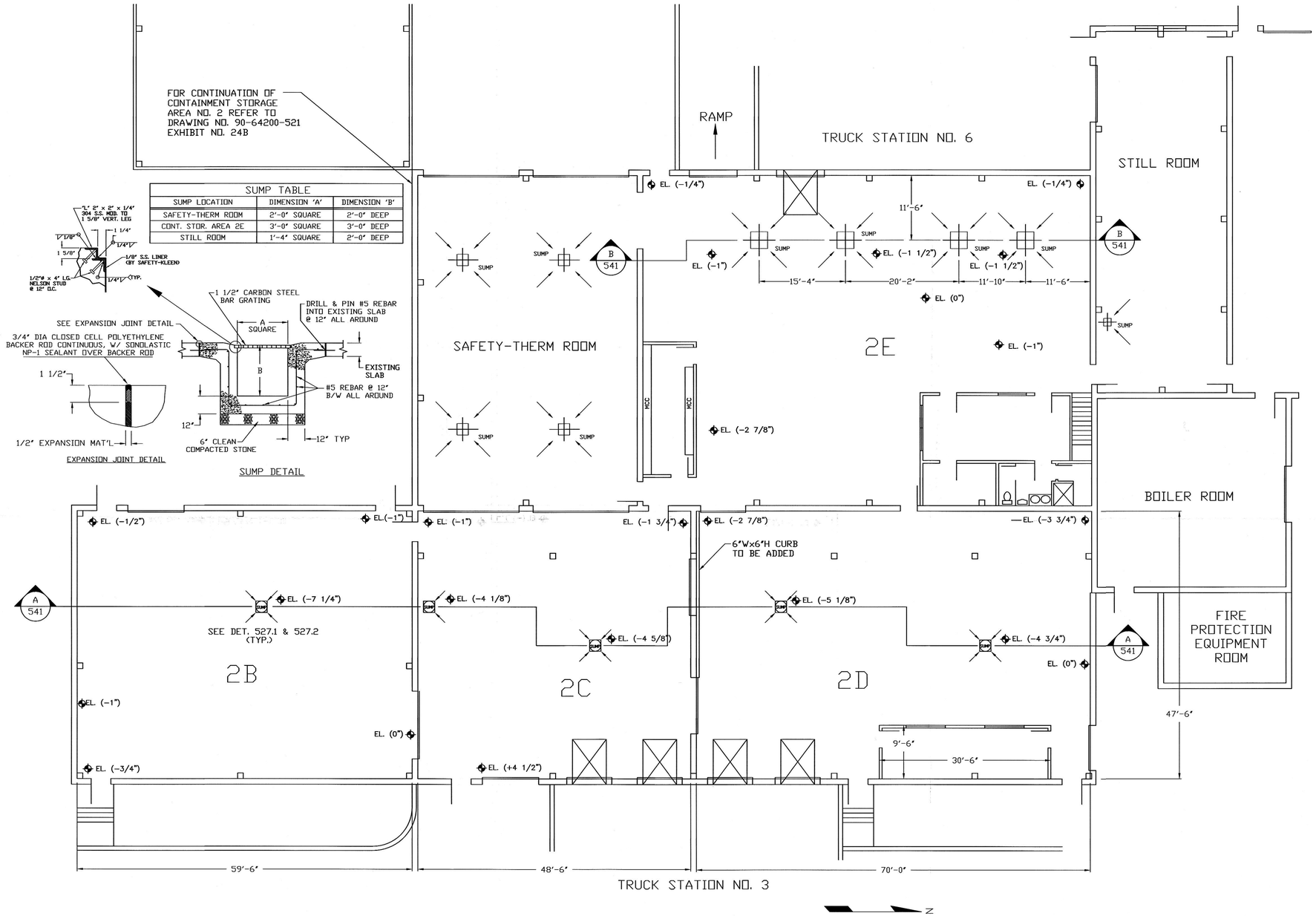

SECTION A-A

TYPICAL WALL SECTION ILLUSTRATING CONTAINMENT CURB

SCALE : 1/2" = 1'-0"

THIS DRAWING CONTAINS INFORMATION PROPRIETARY TO CLEAN HARBORS. ANY REPRODUCTIONS, DISCLOSURE OR USE OF THIS DRAWING IS EXPRESSLY PROHIBITED EXCEPT BY CLEAN HARBORS OR AS CLEAN HARBORS MAY AGREE IN WRITTING.

EXHIBIT 24A Rev. 3

EXHIBIT NO. 24A

NO.	DESCRIPTION	BY	CK	APPR	DATE
3	RCRA PERMIT RENEWAL UPDATE	KMC			12/12/14
2	REVISED PER NOD 1994	M.O'C	KJM		10/18/94
1	ISSUED FOR PART "B" PERMIT NOD	M.O'C			3/02/92
0	ISSUED FOR PERMIT	CEW			10/2/90

REVISIONS

CONTAINER STORAGE NO. 2 CONCRETE CONSTRUCTION LAYOUT

CleanHarbors

581 MILLIKEN DRIVE, HEBRON, OHIO 43025 PHONE (740) 929-3532

SCALE	DRAWN	CHECKED	PROJ. ENG. APPR.	OPERATION APPR	DATE
1" = 10'	CEW				9/6/90

HEBRON, OHIO RECYCLE CENTER

DRAWING NO. 90-64200-527

REV 3

FLOOR PLAN-FOUNDATION

SCALE: 1/8" = 1'-0

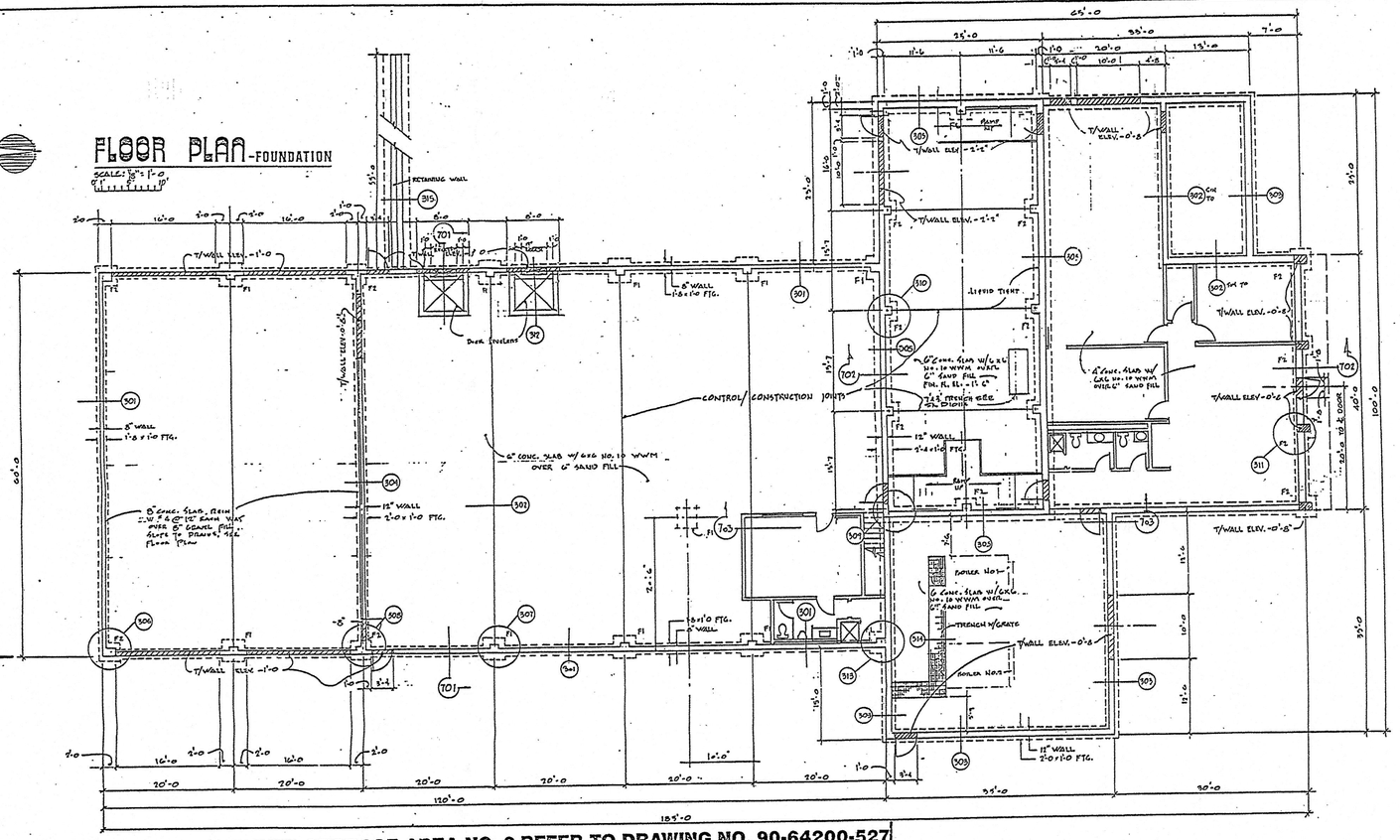

FOR CONTINUATION OF CONTAINER STORAGE AREA NO. 2 REFER TO DRAWING NO. 90-64200-527

EXHIBIT NO. 24A

CONCRETE & FOUNDATION NOTES

1. REMOVE ALL BLACK LOAM AND FILL ENCOUNTERED WITHIN THE AREA TO BE OCCUPIED BY THE NEW CONSTRUCTION.
2. GENERAL MACHINE EXCAVATION FOR FOOTINGS SHALL STOP NOT LESS THAN 6" ABOVE SCHEDULED ELEVATION OF BOTTOMS OF FOOTINGS. FINAL EXCAVATION TO UNDISTURBED SOIL AT REQUIRED FOOTING ELEVATION SHALL BE DONE BY HAND NOT MORE THAN 48 HOURS BEFORE THE FOOTING IS POURED.
3. ALL NECESSARY CHANGES IN ELEVATION OF WALL FOOTINGS TO BE MADE IN STEPS NOT MORE THAN 2' - 0" HIGH AND AT LEAST 4' - 0" APART, EXCEPT AS OTHERWISE DETAILED. SLOPE BOTTOM BARS IN WALL TO FOLLOW STEPS IN FOOTINGS.
4. AFTER EXCAVATING FOR ALL EARTH SUPPORTED FLOOR, TERRACE AND RAMP OR STAIR SLABS, THE EXPOSED NATURAL SOIL SHALL BE THOROUGHLY COMPACTED AND PROOF ROLLED WITH A 15 TON ROLLER PRIOR TO PACING FILL.
5. MINIMUM ALLOWABLE SOIL PRESSURE IS ASSUMED TO BE 3000 POUNDS PER SQUARE FOOT. THE CONTRACTOR SHALL EXTEND ALL FOOTINGS TO SOIL WITH A BEARING CAPACITY OF 3000 POUNDS, PER SQUARE FOOT.
6. ALL REINFORCING STEEL SHALL BE HIGH STRENGTH NEW BILLET STEEL MEETING ASTM A-615 GRADE 60, EXCEPT THAT COLUMN TIES AND STIRRUPS SHALL BE ASTM A-615, GRADE 40.
7. ALL BARS #3 AND LARGER SHALL BE DEFORMED ACCORDING TO ASTM A-305. ALL BAR DETAILING, AND ACCESSORIES TO BE FURNISHED, SHALL CONFORM TO TYPICAL DETAILS IN THE LATEST ACI DETAILING MANUAL, EXCEPT AS OTHERWISE SHOWN, NOTED, OR SPECIFIED.
8. ALL CONTINUOUS VERTICAL OR HORIZONTAL BARS IN FOUNDATIONS AND FRAMING SHALL BE LAP SPLICED, WHERE NECESSARY OR DESIRABLE, BY WIRING TOGETHER IN CONTACT. LENGTH OF ALL LAPS SHALL BE 36 BAR DIAMETERS OR 2' - 0" MIN., WHICHEVER IS GREATER. FOR CONTINUOUS REINFORCEMENT IN BEAMS AND JOISTS AND SLABS, LAP TOP BARS AT CENTER OF SPAN AND BOTTOM BARS AT SUPPORT.
9. FORMWORK FOR ALL CONCRETE WHICH WILL BE EXPOSED ON THE COMPLETED BUILDINGS, SHALL BE CONSTRUCTED FROM A SUITABLE SURFACED PLYWOOD WHICH WILL PRODUCE AN ACCEPTABLE SMOOTH SURFACE.
10. GENERAL CONTRACTOR SHALL CHECK WITH ARCHITECTURAL, MECHANICAL AND ELECTRICAL DRAWINGS FOR OPENINGS, SLEEVES, ANCHORS, HANGERS, SLAB DEPRESSIONS, AND OTHER ITEMS RELATED TO CONCRETE WORK, AND SHALL ASSUME FULL RESPONSIBILITY FOR THEIR PROPER LOCATION, BEFORE POURING CONCRETE.

    ALL HORIZONTAL AND VERTICAL PIPE SLEEVE OPENINGS THROUGH BEAMS SHALL BE FORMED WITH STANDARD STEEL PIPE.
11. PITCH CONCRETE SLABS, WHERE REQUIRED, TO FLOOR DRAINS AS SHOWN ON ARCHITECTURAL DRAWINGS. See sht. 3, of M-1.
12. CONCRETE PROTECTION FOR REINFORCING BARS SHALL BE AS FOLLOWS:

    FOOTINGS 3" CLEAR, BOTTOM AND SIDES
    WALLS 2" CLEAR, OUTSIDE FACE
13. ALL CONCRETE FRAMING AND FOUNDATIONS HAVE BEEN DESIGNED BY THE ULTIMATE STRENGTH METHOD.
14. ALL CONCRETE FOR EARTH-SUPPORTED SLABS SHALL TEST 3500 POUNDS PER SQUARE INCH AT 28 DAYS. ALL OTHER CONCRETE INCLUDING CONCRETE FOR FOOTINGS, WALLS, COLUMNS, BEAMS, JOISTS, AND FRAMED SLABS SHALL TEST 3000 POUNDS PER SQUARE INCH AT 28 DAYS. SEE SPECIFICATIONS SECT 3000 FOR ALL OTHER REQUIREMENTS. MINIMUM CEMENT CONTENT 5 BAGS/CU. YD.
15. FOOTINGS SHALL BE PROTECTED AGAINST FREEZING CONDITIONS FOR A PERIOD OF 3 DAYS AFTER POURING. NO FOOTINGS SHALL BE POURED ON FROZEN GROUND.
16. ADD 1" STYROFOAM PERIMETER INSULATION 2' DOWN FOUNDATION WALL @ALL TERRACE WALLS
17. DEPRESS ALL FOUNDATION WALLS 8" AT ALL INTERIOR DOOR EXACT LOCATION TO BE DETERMINED IN FIELD.
18. SEE SHT. 2 FOR ALTERNATE NO. 3 FOR ALL SITE CONCRETE.

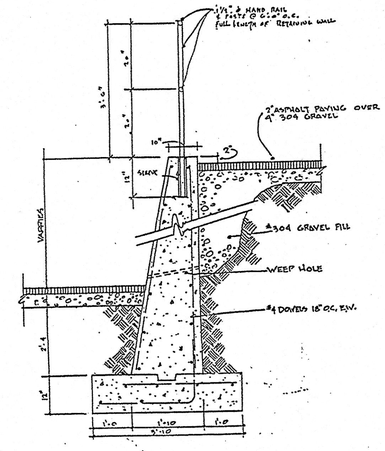

DETAIL 315/3
SCALE: 3/4" = 1'-0

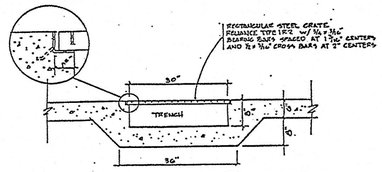

DETAIL 314/3
SCALE: 3/4" = 1'-0

COLUMN FOOTING SCHEDULE		
MARK	SIZE	REINFORCING
F1	3'-6 x 3'-6 x 1'-0	5#5 EW
F2	4-0 x 4-0 x 1'-0	6#5 EW

DETAILS

SCALE: 3/4" = 1'-0

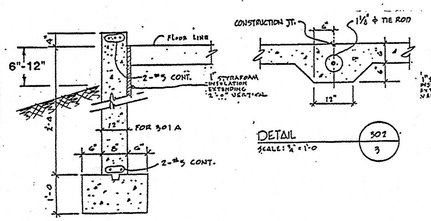

DETAIL 301/3
SCALE: 3/4" = 1'-0
301 A AS NOTED

DETAIL 302/3
SCALE: 3/4" = 1'-0

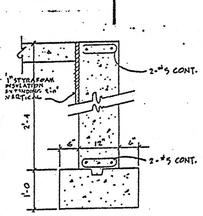

DETAIL 303/3
SCALE: 3/4" = 1'-0

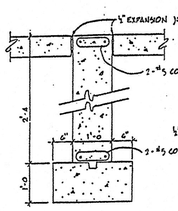

DETAIL 304/3
SCALE: 3/4" = 1'-0

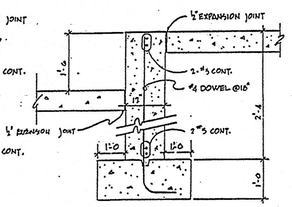

DETAIL 305/3
SCALE: 3/4" = 1'-0

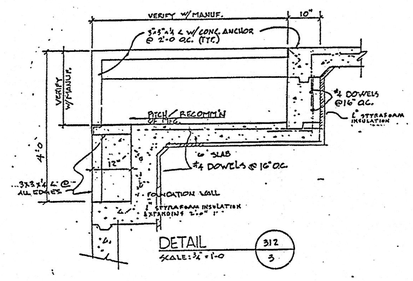

DETAIL 312/3
SCALE: 3/4" = 1'-0

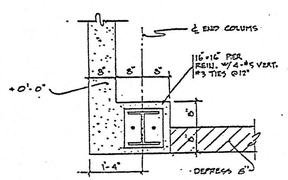

DETAIL 306/3
SCALE: 3/4" = 1'-0

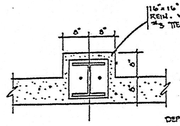

DETAIL 307/3
SCALE: 3/4" = 1'-0

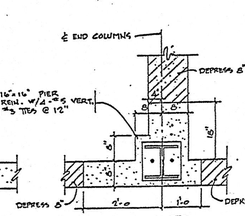

DETAIL 308/3
SCALE: 3/4" = 1'-0

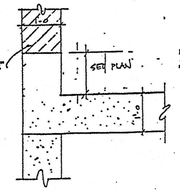

DETAIL 309/3
SCALE: 3/4" = 1'-0

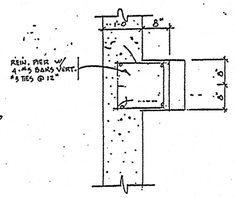

DETAIL 310/3
SCALE: 3/4" = 1'-0

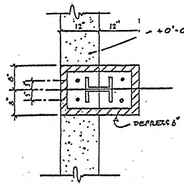

DETAIL 311/3
SCALE: 3/4" = 1'-0

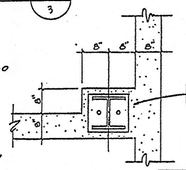

DETAIL 313/3
SCALE: 3/4" = 1'-0

EXHIBIT NO. 24B

THIS DRAWING CONTAINS INFORMATION PROPRIETARY TO SAFETY-KLEEN CORP. ANY REPRODUCTION, DISCLOSURE OR USE OF THIS DRAWING IS EXPRESSLY PROHIBITED EXCEPT BY SAFETY-KLEEN OR AS SAFETY-KLEEN MAY AGREE IN WRITING.

NO	DESCRIPTION	BY	CHK	APPR	DATE
1	ISSUED FOR PART "B" PERMIT NOD	RDK			3-7-92
0	ISSUED FOR PART "B" PERMIT	S.P.			9-13-90

REVISIONS

TITLE
CONTAINER STORAGE AREA NO. 2
CONCRETE CONSTRUCTION
PLAN & DETAILS

Clean Harbors
RECYCLING SERVICES of OHIO, LLC
581 Milliken Drive
Hebron, Ohio 43025

[redacted]

NO APPR. | OPERATION APPR. | DATE 4-23-80

SCALE: AS NOTED

HEBRON, OHIO
RECYCLE CENTER

DRAWING NO. 90-64200-521

FILE 1

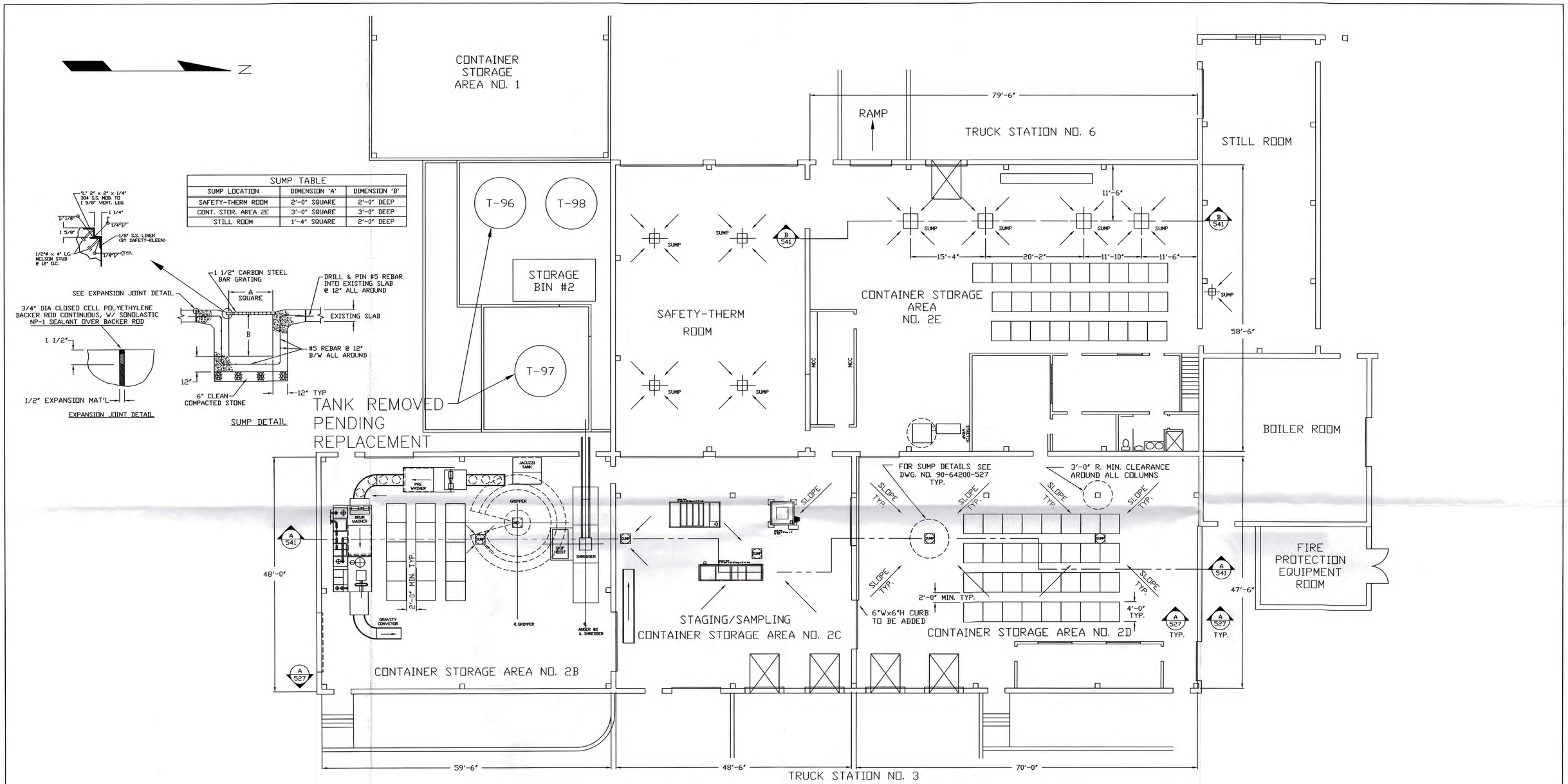

SUMP TABLE		
SUMP LOCATION	DIMENSION 'A'	DIMENSION 'B'
SAFETY-THERM ROOM	2'-0" SQUARE	2'-0" DEEP
CONT. STOR. AREA 2E	3'-0" SQUARE	3'-0" DEEP
STILL ROOM	1'-4" SQUARE	2'-0" DEEP

CONTAINER STORAGE AREA NO.2B
FLOODED FLOOR VOLUME = 1336 GALLONS

CONTAINMENT VOLUME REQUIRED
15 PALLETS x 4 DRUMS = 60 DRUMS
60 DRUMS x 3 HIGH STACKING = 180 DRUMS
180 DRUMS x 55 gal./DRUM = 9900 GALLONS
9900 GALLONS x (0.10) = 990 GALLONS

DISPLACEMENTS
15 PALLETS x 2.0 cu.ft./PALLET = 30 cu.ft
30 cu.ft. x 7.48 gal./cu.ft. = 224 GALLONS
NET CONTAINMENT = 1112 GALLONS

1112 GALLONS - 1089 GALLONS = 23 GALLONS EXCESS

CONTAINER STORAGE AREA NO.2C
NO STORAGE - ONLY SAMPLING & STAGING OF CONTAINERS IS DONE IN AREA NO. 2C

CONTAINER STORAGE AREA NO.2D
FLOODED FLOOR VOLUME (W/CURB ADDED) = 970 GALLONS

CONTAINER STORAGE AREA NO.2E
(4) SUMPS FOR CONTAINMENT
(3') x (3') x (3') x 7.48 gal./cu.ft = 202 GALLONS
(4) SUMPS X 202 GALLONS EACH = 808 GALLONS

CONTAINMENT VOLUME REQUIRED
28 PALLETS x 4 DRUMS = 112 DRUMS
112 DRUMS x 55 gal./DRUM = 6160 GALLONS
6160 GALLONS x (0.10) = 616 GALLONS

808 GALLONS - 616 GALLONS = 192 GAL. EXCESS

THIS DRAWING CONTAINS INFORMATION PROPRIETARY TO CLEAN HARBORS. ANY REPRODUCTIONS, DISCLOSURE OR USE OF THIS DRAWING IS EXPRESSLY PROHIBITED EXCEPT BY CLEAN HARBORS OR AS CLEAN HARBORS MAY AGREE IN WRITTING.

REFERENCE DWG. NO'S: 90-64200-527 EXHIBIT 24A
90-64200-541 EXHIBIT 24E
90-64200-538 EXHIBIT 44B

DF=Exhibit 24C Rev. 6

EXHIBIT NO. 24C

NO.	DESCRIPTION	BY	CK	APPR	DATE
6	RCRA PERMIT RENEWAL UPDATES	KMC			04/09/15
5	RCRA PERMIT RENEWAL UPDATE	KMC			12/12/14
4	REMOVED PROPOSED AREA 2A	SWL			7/2/02
3	REVISED PER NOD 1994	M.O'C	KJM		10/17/94
2	ISSUED FOR PART 'B' PERMIT NOD	RDK			03/06/92
1	ISSUED FOR NOD PERMIT	RDK			04/30/91

REVISIONS

CONTAINER STORAGE AREA NO. 2
DRUM ARRANGEMENT

CleanHarbors®
581 MILLIKEN DRIVE, HEBRON, OHIO 43025 PHONE (740) 929-3532

SCALE	DRAWN	CHECKED	PROJ. ENG. APPR.	OPERATION APPR.	DATE
1" = 10'	RDK				9/6/90

HEBRON, OHIO
RECYCLE CENTER

DRAWING NO. 90-64200-203 REV 6

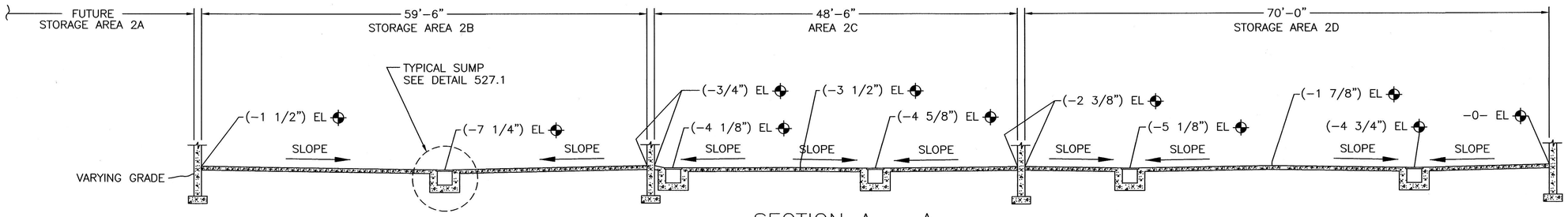

SECTION A – A

REFERENCE DWG 90-64200-527
SCALE: 1/8" = 1'-0"

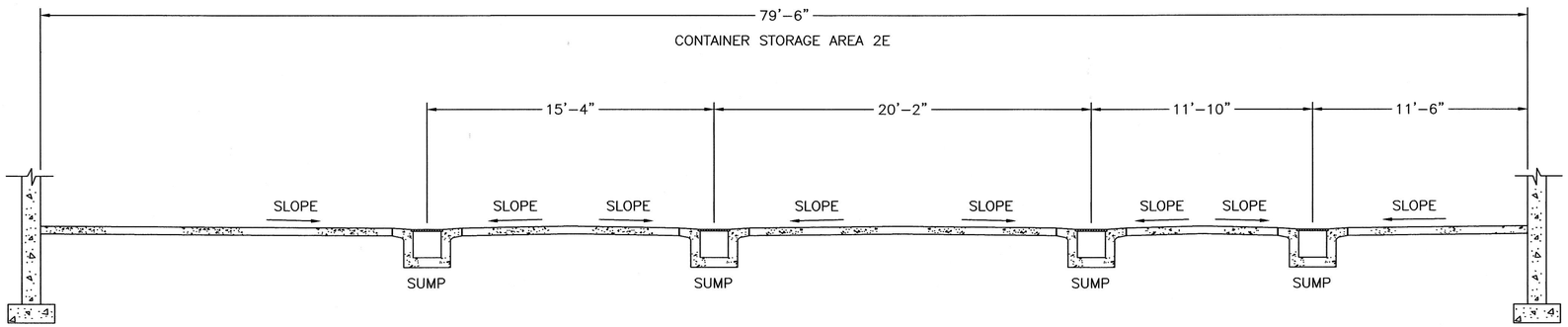

SECTION B – B

REFERENCE DWG 90-64200-527
SCALE: 1/4" = 1'-0"

CONTAINMENT CALCULATION FOR CONTAINER STORAGE NO.2
(WITHOUT USE OF PALLETS)

CONTAINER STORAGE AREA NO.2B
FLOODED FLOOR VOLUME = 1336 GALLONS

DISPLACEMENTS
15 x 4 (DRUMS) x (TR ^{2} x 0.5) = 94.2 cu.ft.
94.2 cu.ft. x 7.48 gal./cu.ft. = 705 GALLONS
NET CONTAINMENT = 631 GALLONS

CONTAINMENT VOLUME REQUIRED
96 DRUMS
96 DRUMS x 55 gal./DRUM = 5280 GALLONS
5280 GALLONS x (0.10) = 528 GALLONS

631 GALLONS - 528 GALLONS = 103 GALLONS EXCESS

AREA NO.2C
NO STORAGE

CONTAINER STORAGE AREA NO.2D
FLOODED FLOOR VOLUME = 970 GAL.

DISPLACEMENTS
14 x 4 (DRUMS) x (TR ^{2} x 0.5) = 88 cu.ft.
88 cu.ft. x 7.48 gal./cu.ft. = 658 GALLONS
NET CONTAINMENT = 312 GALLONS

CONTAINMENT VOLUME REQUIRED
56 DRUMS
56 DRUMS x 55 gal./DRUM = 3080 GALLONS
3080 GALLONS x (0.10) = 308 GALLONS

312 GALLONS - 308 GALLONS = 4 GALLONS EXCESS

CONTAINER STORAGE AREA NO.2E
(4) SUMPS FOR CONTAINMENT
(3') x (3') x (3') x 7.48 gal./cu.ft = 202 GALLONS

CONTAINMENT VOLUME REQUIRED
112 DRUMS
112 DRUMS x 55 gal./DRUM = 6160 GALLONS
6160 GALLONS x (0.10) = 616 GALLONS

808 GALLONS - 616 GALLONS = 192 GAL. EXCESS

REFERENCE DWG. NO'S: 90-64200-527 EXHIBIT 24A
90-64200-538 EXHIBIT 44B
90-64200-203 EXHIBIT 24c

DF=Exhibit 24D Rev. 4

EXHIBIT NO. 24D

NO.	DESCRIPTION	BY	CK	APPR	DATE
4	RCRA PERMIT RENEWAL UPDATE	KMC			12/12/14
3	REVISED FOR PART 'B' PERMIT RENEWAL	SWL			7/3/02
2	REVISED PER NOD 1995 REMOVED "CURB ADDED" STATEMENT	RDK	KJM		5/31/95
1	REVISED PER NOD 1994	M.O'C	KJM		10/18/94
0	ISSUED FOR PART 'B' PERMIT NOD	M.O'C	KJM	TS	3/02/92

REVISIONS

FLOOR ELEVATIONS FOR CONTAINER STORAGE AREAS NO. 2B, 2D & 2E CONTAINMENT CALCULATION

CleanHarbors
581 MILLIKEN DRIVE, HEBRON, OHIO 43025 PHONE (740) 929-3532

SCALE	DRAWN	CHECKED	PROJ. ENG. APPR.	OPERATION APPR.	DATE
NOTED	M.O'C	KJM	TS		2/11/92

HEBRON, OHIO RECYCLE CENTER

DRAWING NO. 90-64200-541 REV 4

THIS DRAWING CONTAINS INFORMATION PROPRIETARY TO CLEAN HARBORS. ANY REPRODUCTIONS, DISCLOSURE OR USE OF THIS DRAWING IS EXPRESSLY PROHIBITED EXCEPT BY CLEAN HARBORS OR AS CLEAN HARBORS MAY AGREE IN WRITING.

RCRA HAZARDOUS WASTE FACILITY OPERATING PERMIT PART B APPLICATION

Clean Harbors Recycling Services of Ohio, LLC

Hebron, OH

EPA ID No. OHD 980 587 364

CleanHarbors®

December 2014

Volume III

RCRA HAZARDOUS WASTE FACILITY OPERATING PERMIT PART B APPLICATION

Clean Harbors Recycling Services of Ohio, LLC

Hebron, OH

EPA ID No. OHD 980 587 364

CleanHarbors®

December 2014

Volume III

Date: December, 19 2014
Revision No.: 0

Exhibit List

Exhibit No.	Description	Drawing No.
1	U.S.G.S. Map	90-64200-007
1A	Zoning Map	02-64200-001
2	Facility Site Plan	90-64200-002
2A	Facility Site Plan	Removed
3	Proposed Site Plan	Removed
4	Fire Protection System	90-64200-009
5	Existing Facility Traffic Flow, Emergency Equipment Locations & Evacuation Routes	90-64200-004
7	Property Survey	90-64200-000
8	Former Site Plan	90-64200-010
9	Storm, Sanitary & Process Sewer & Systems Maps	90-64200-008
10	Floodplain Map	90-64200-006
11	Topographic Map of Hebron R/C	90-64200-003
12	15,000 Gal. Steel Lined Tank for Tank Nos. 32-37, 39-45, 56-58, 62, 63, 65, 66, 80-82, 85-88, 91, 93, 101, 105 &110	90-64200-151
13	20,000 Gal. Steel Tank No. 49, 50, 98	90-64200-152
14	15,000 Gal. Steel Piggy-Back Tank for Tank Nos. 48, 83, 84, 89, 92, 94 & 102	90-64200-153
15	30,000 Gal. Steel Tanks Nos. 51, 52 53, 59-60, 61, 67, 68 & 69; & Stainless Steel Tank Nos. 106, 107, 111 & 112	90-64200-154
16	15,000 Gal. Stainless Steel Tank Nos. 90, 95, 100, 103, 104, 108, 109, 113 & 114	90-64200-155
21	15,000 Gal. Carbon Steel Storage Tank Nos. 203, 204, 205 & 209	90-64200-160
22	12,000 Gal. Carbon Steel Storage Tank No. 96	Removed
23A	Container Storage No. 1 Concrete Construction Plan Sections & Details	90-64200-525
23B	Container Storage No. 1 Concrete Construction Plan Sections & Details	90-64200-526
23C	Container Storage No. 1 Drum Arrangement	90-64200-202
24A	Container Storage Area No. 2 Concrete Construction Layout	90-64200-527
24B	Container Storage Area No. 2 Concrete Construction Plan & Details	90-64200-521
24C	Container Storage Area No. 2 Drum Arrangement	90-64200-203
24D	Floor Elevations for Container Storage Areas 2B, 2D & 2E Containment Calculations	90-64200-541
26	Tank Farm No. 1 Concrete Construction Plan	90-64200-501
27	West Section of Tank Farm No. 1 Concrete Construction Plan	90-64200-502
28	Tank Farm No. 1 Sections and Details	88-64200-503
29	Tank Farm No. 2 Concrete Construction Plan	90-64200-504
30	Tank Farm No. 2 Hose Connection Pit Concrete Plan Sections & Details	90-64200-507
31	Tank Farm No. 3 Concrete Construction Plan	90-64200-505
32	Concrete Construction Details for Tank Farms No. 1, 2 & 3	90-64200-506
33	Tank Farm No. 4 Concrete Construction Plan, Section & Details	90-64200-508
35	Tank Farm No. 6 Concrete Construction Plan, Section & Details	90-64200-510
36	Tank Farm No. 4 Misc. Solvent Fuels Process Flow Diagram	90-64200-400
40A	Truck Station No. 1 Concrete Construction Plan & Details	90-64200-530
40B	Truck Station No. 1 Sections & Details	90-64200-531
40C	Truck Station No. 1 Alternate Drum Storage with Containment Calculations	90-64200-204
41A	Truck Station No. 2 Concrete Construction Drawing	90-64200-532
41B	Truck Station No. 2 Sections & Details	90-64200-529

Exhibit List

Exhibit No.	Description	Drawing No.
41C	Truck Station No. 2 Plan Sections & Details	90-64200-534
41D	Truck Station No. 2 Alternate Drum Storage with Containment Calculations	90-64200-205
42	Truck Station No. 4 Concrete Construction Drawing	90-64200-535
43	Truck Station No. 5 Concrete Construction Drawing	90-64200-536
45A	Solids Handling System Process Flow Diagram	90-64200-118
45B	FRS Drum Handling System Process Flow Diagram	90-64200-700
46A	Tank Farm No. 1 Used Solvents Process Flow Diagram, 1 of 2	90-64200-102
46B	Tank Farm No. 1 Used Solvents Process Flow Diagram, 2 of 2	90-64200-103
46C	Tank Farm No. 1 Miscellaneous Function Process Flow Diagram, 1 of 2	90-64200-105
46D	Tank Farm No. 1 Miscellaneous Function Process Flow Diagram, 2 of 2	90-64200-104
46E	Tank Farm No. 1 Clean Solvent Process Flow Diagram, 1 of 2	90-64200-100
46F	Tank Farm No. 1 Clean Solvent Process Flow Diagram, 2 of 2	90-64200-101
46G	Tank Farm No. 1 Hose Station Flow Diagram	90-64200-106
47A	Tank Farm No. 2 Cooker Pit Area Process Flow Diagram	90-64200-200
47B	Tank Farm No. 2 LUWA Pit Area Process Flow Diagram, 1 of 2	90-64200-201
47C	Tank Farm No. 2 LUWA Pit Area Process Flow Diagram, 2 of 2	90-64200-202
47D	Tank Farm No. 2 Column Pit Area Process Flow Diagram, 2 of 2	90-64200-206
47E	Tank Farm No. 2 Column Pit Area Process Flow Diagram, 1 of 2	90-64200-205
47F	Tank Farm No. 2 Q/C Tank Pit Area Process Flow Diagram	90-64200-207
48A	Tank Farm No. 3 Methylene Chloride Finished Product Process Flow Diagram	90-64200-301
48B	Tank Farm No. 3 Industrial Perchloroethylene Finished Product Process Flow Diagram	90-64200-302
48C	Tank Farm No. 3 Dry Cleaner Perchloroethane Finished Product Process Flow Diagram	90-64200-303
48D	Tank Farm No. 3 1, 1, 1 Trichloroethane Finished Product Process Flow Diagram	90-64200-304
48E	Tank Farm No. 3 Trichloroethylene Finished Product Process Flow Diagram	90-64200-305
48F	Tank Farm No. 3 Misc Solvent Finished Product Process Flow Diagram	90-64200-306
50	P & ID Tank Farm No. 6 & Truck Station No. 1	90-64200-135
51	20,000 Gal. Carbon Steel Tank No. 97	Removed
54	Tank Farm No. 1 Well Water Process Flow Diagram	92-64200-134
57	Assembly - Ground Product Storage Bin (Bin #2, Tank Farm #6)	R-67801

TANK FARM NO. 1

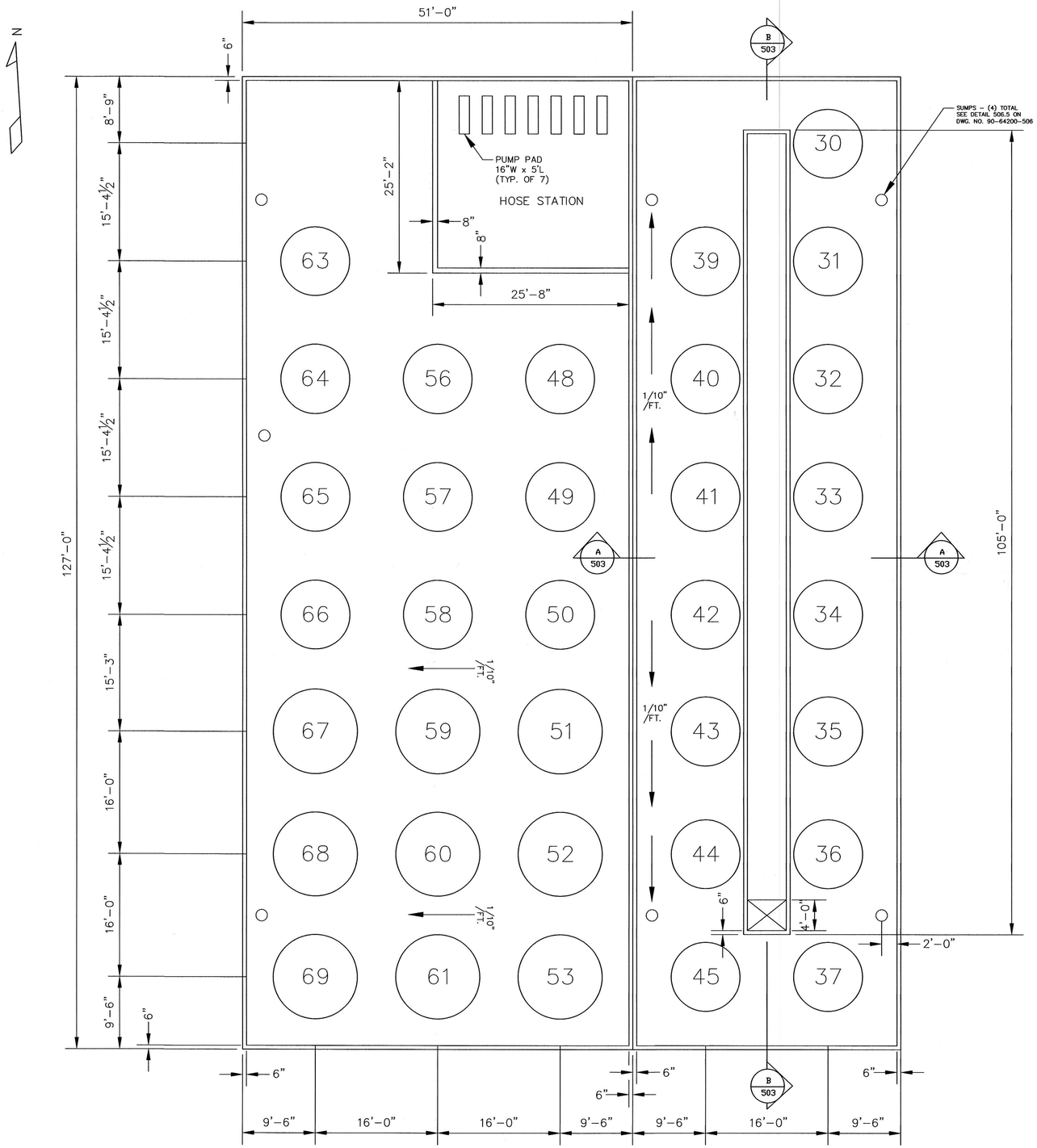

THIS DRAWING CONTAINS INFORMATION PROPRIETARY TO CLEAN HARBORS. ANY REPRODUCTIONS, DISCLOSURE OR USE OF THIS DRAWING IS EXPRESSLY PROHIBITED EXCEPT BY CLEAN HARBORS OR AS CLEAN HARBORS MAY AGREE IN WRITTING.

DF=Exhibit 26 Rev. 2

EXHIBIT NO. 26

NO.	DESCRIPTION	BY	CK	APPR	DATE
2	RCRA PERMIT RENEWAL UPDATE	KMC			12/12/14
1	REVISED FOR PERMIT RENEWAL	SWL			7/3/02
0	ISSUED FOR PERMITTING	NPA			1/30/86

REVISIONS

TANK FARM NO. 1
CONCRETE CONSTRUCTION PLAN

CleanHarbors®
581 MILLIKEN DRIVE, HEBRON, OHIO 43025 PHONE (740) 929-3532

SCALE	DRAWN	CHECKED	PROJ. ENG. APPR.	OPERATION APPR	DATE
1/8"= 1'	NPA				1/30/86

HEBRON, OHIO
RECYCLE CENTER

DRAWING NO. 90-64200-501

REV 2

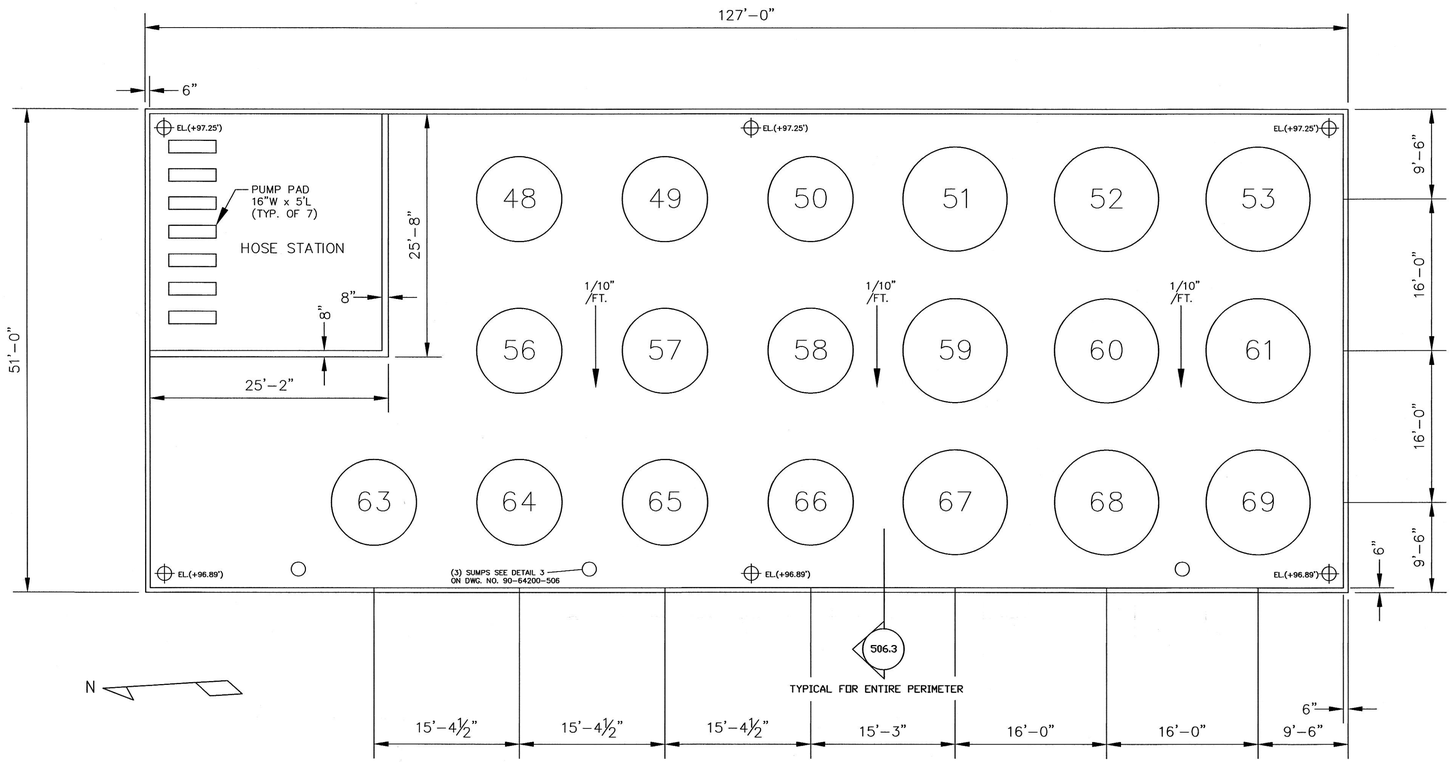

WEST SECTION OF TANK FARM NO.1

NOTE: FIELD VERIFY ALL ELEVATIONS FROM BENCHMARKS;
STILLROOM FLOOR (REFERENCE) EL. (+100.00')
BOILER ROOM FLOOR EL. (+101.33')

THIS DRAWING CONTAINS INFORMATION PROPRIETARY TO CLEAN HARBORS. ANY REPRODUCTIONS, DISCLOSURE OR USE OF THIS DRAWING IS EXPRESSLY PROHIBITED EXCEPT BY CLEAN HARBORS OR AS CLEAN HARBORS MAY AGREE IN WRITTING.

DF=Exhibit 27 Rev. 4

EXHIBIT NO. 27

NO.	DESCRIPTION	BY	CK	APPR	DATE
4	RCRA PERMIT RENEWAL UPDATE	KMC			12/12/14
3	REVISED FOR PERMIT RENEWAL	SWL			7/10/02
2	REVISED PER NOD 1994	MBH			10/17/94
1	REVISED PER NOD	RDK			5/1/91
0	ISSUED FOR PERMITTING	NPA			12/5/86

REVISIONS

WEST SECTION OF TANK FARM NO. 1
CONCRETE CONSTRUCTION PLAN

CleanHarbors
581 MILLIKEN DRIVE, HEBRON, OHIO 43025 PHONE (740) 929-3532

SCALE	DRAWN	CHECKED	PROJ. ENG. APPR.	OPERATION APPR	DATE
1/8"= 1'	NPA			T.S.	1/14/86

HEBRON, OHIO
RECYCLE CENTER

DRAWING NO.	REV
90-64200-502	4

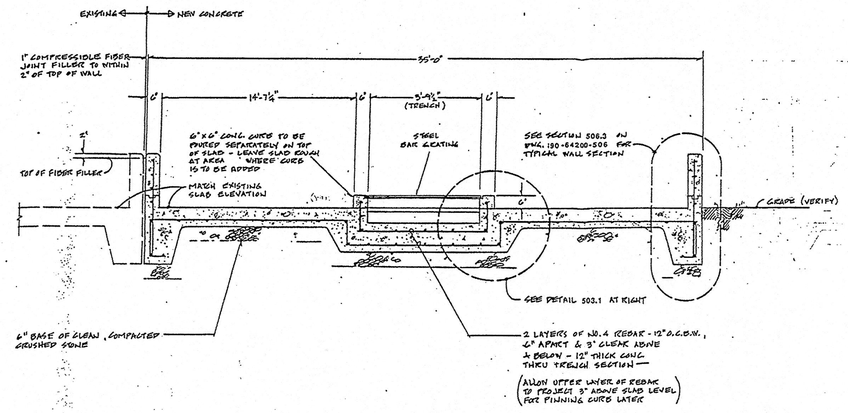

SECTION A-A

SCALE: ½" = 1'-0" REF. DWG. 90-64200-501

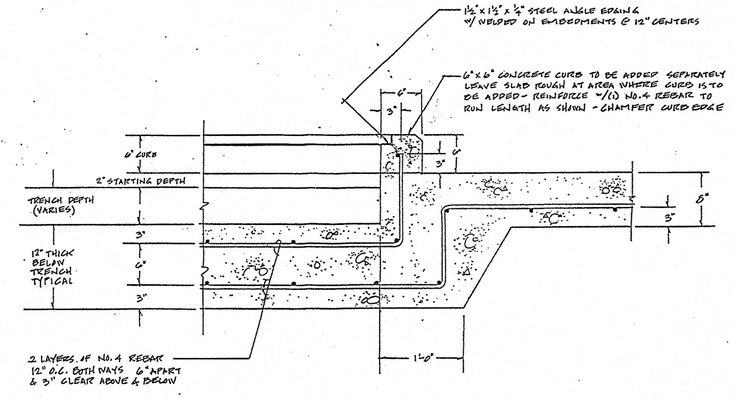

DETAIL - 503.1

SCALE: 1½" = 1'-0"

SECTION B-B

SCALE: ¼" = 1'-0" REF. DWG. 90-64200-501

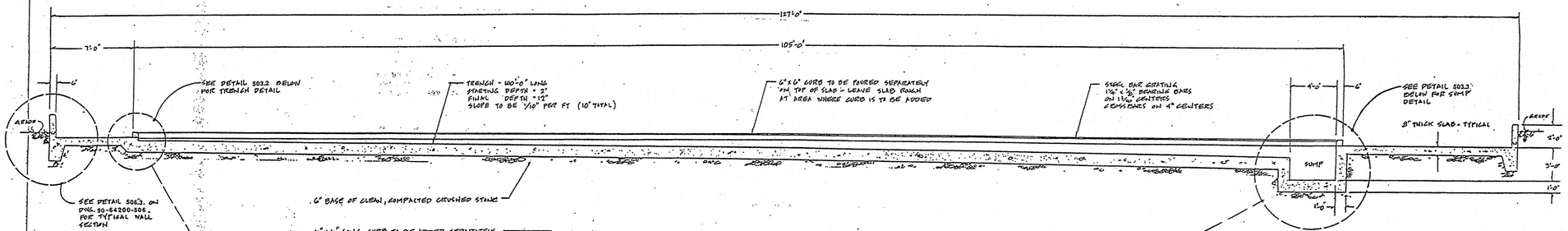

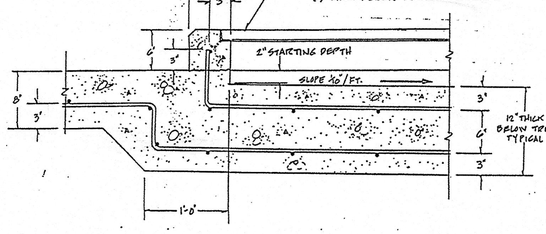

DETAIL - 503.2

SCALE: 1½" = 1'-0"

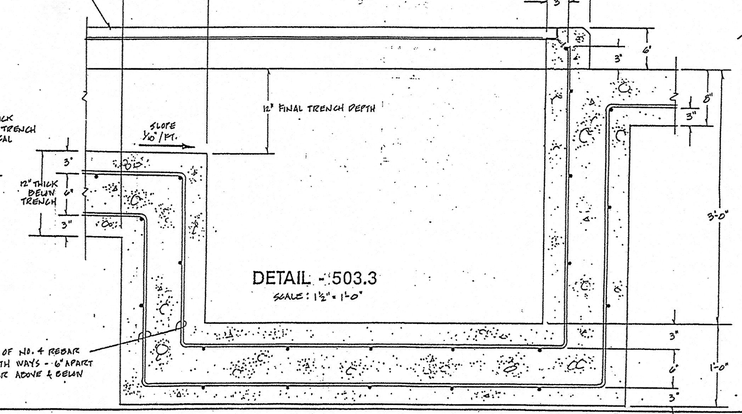

DETAIL - 503.3

SCALE: 1½" = 1'-0"

NOTES

1. REFER TO DWG. 90-64200-501 FOR LAYOUT & LOCATION INFORMATION
   REFER TO DWG. 90-64200-506 FOR DETAILS OTHER THAN THOSE SHOWN

RCRA PART B
PERMIT DRAWING

EXHIBIT 28

REF. DWG. NO. 85-64201-510

NO.	DESCRIPTION	BY	DATE
1	ISSUED FOR PERMITTING	NPA	

REVISIONS

TITLE: TANKFARM NO. 1
SECTIONS AND DETAILS

CleanHarbors
RECYCLING SERVICES of OHIO, LLC
581 Milliken Drive
Hebron, Ohio 43025
PHONE 3127697-8450

DRAWN: WLJ DATE: 1-31-86

HEBRON, OHIO RECYCLE CNTRC.

88-64200-503 REV 0

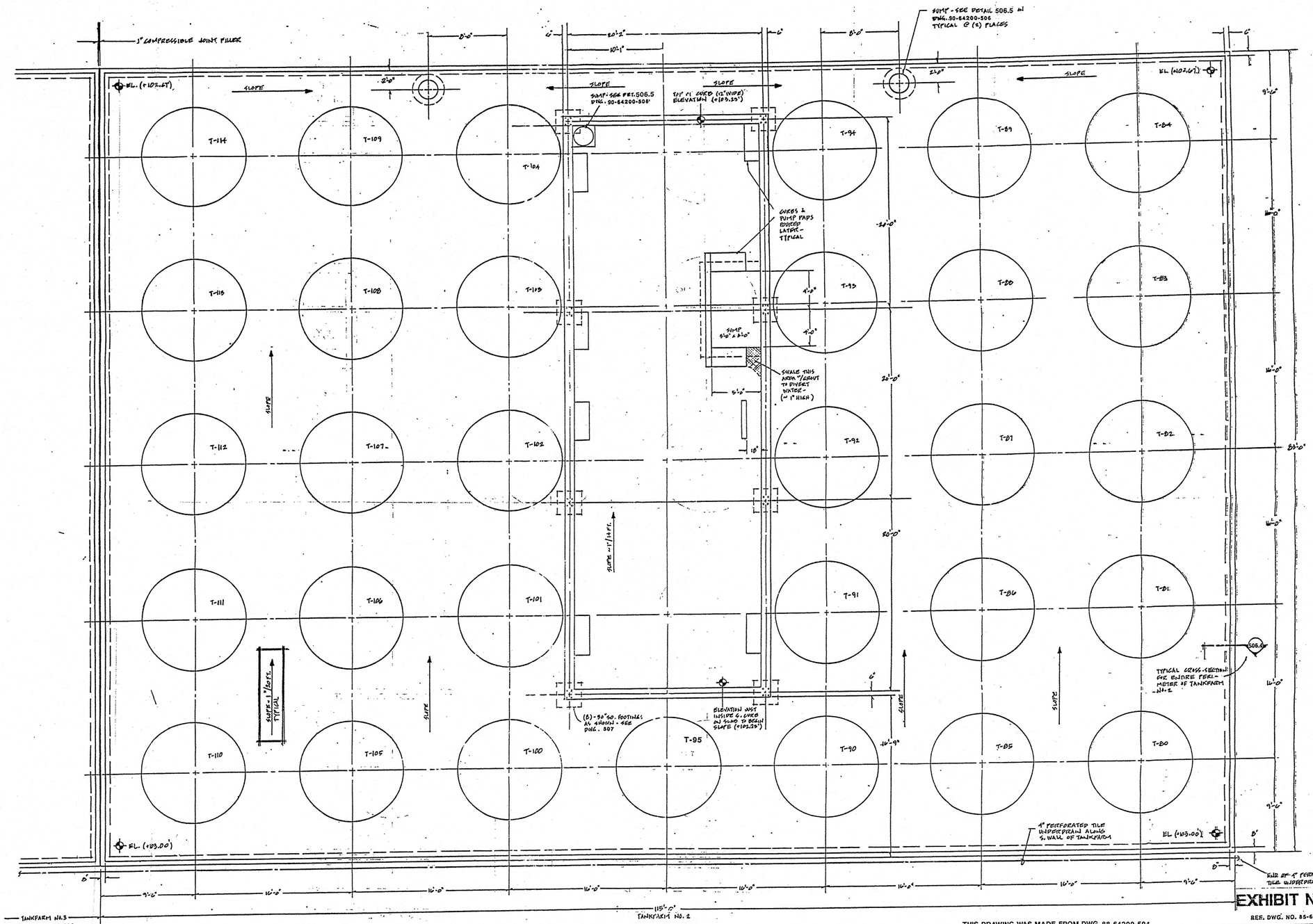

EXHIBIT NO. 29

REF. DWG. NO. 85-64201-502

THIS DRAWING WAS MADE FROM DWG. 88-64200-504

PLAN - TANKFARM NO. 2

SCALE: 1/4" = 1'-0"

0' 1' 5' 10'

RCRA PART B. PERMIT DRAWING

NO	DESCRIPTION	BY	DATE
1	REPOSITIONED PUMP PAD @ SOUTH END AND REMOVED 6" WIDE CURBS.	S.P.	9-6-90
0	ISSUED FOR PERMITTING	NPA	12-5-88

REVISIONS

TITLE: TANKFARM NO. 2 CONCRETE CONSTRUCTION PLAN

CleanHarbors
RECYCLING SERVICES of OHIO, LLC
581 Milliken Drive
Hebron, Ohio 43025

DRAWN: WLJ DATE: 9-20-86

HEBRON, OHIO RECYCLE CENTER

90-64200-504 REV. 1

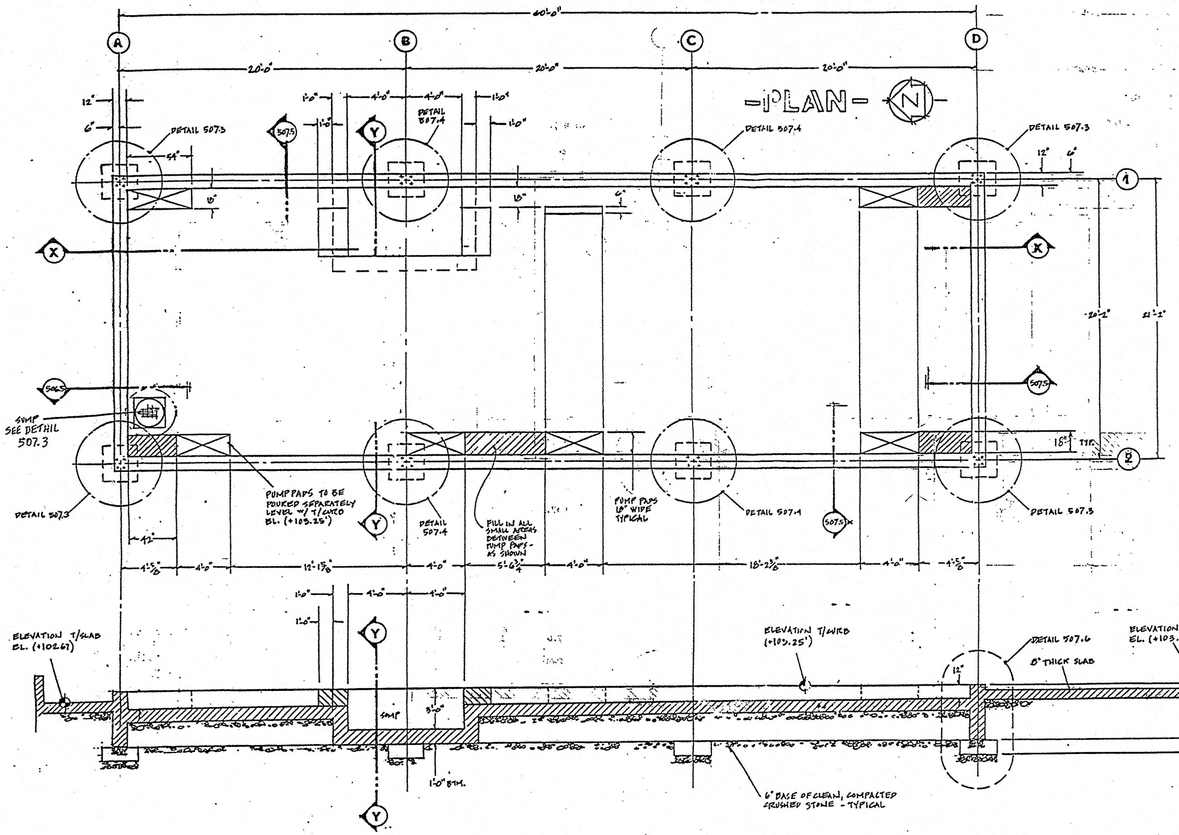

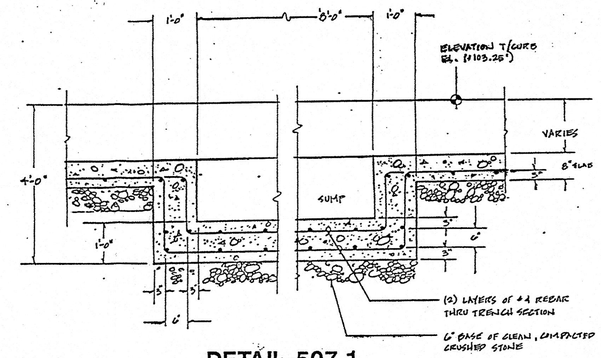

DETAIL-507.1

SCALE: 3/4" = 1'-0"

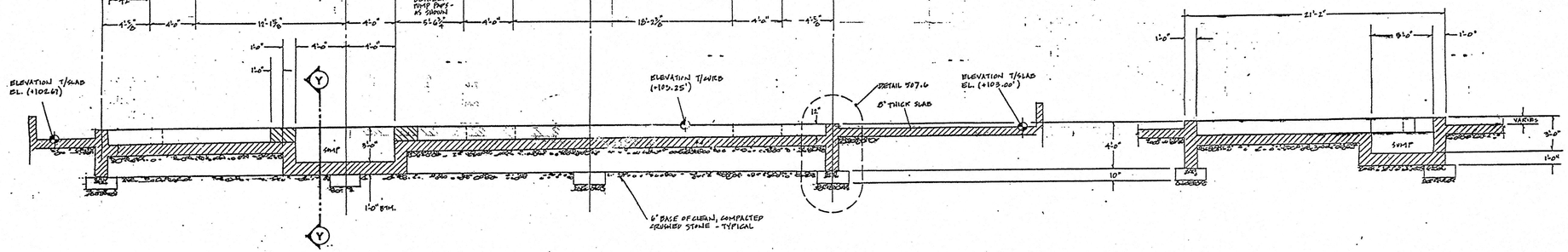

-SECTION X-X-

SCALE: 1/4" = 1'-0"

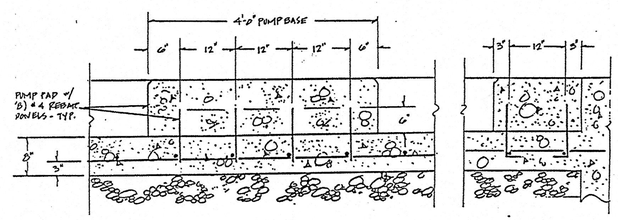

DETAIL-507.2

SCALE: 1" = 1'-0"

-SECTION Y-Y-

SCALE: 1/4" = 1'-0"

RCRA PART B PERMIT DRAWING

EXHIBIT NO. 30

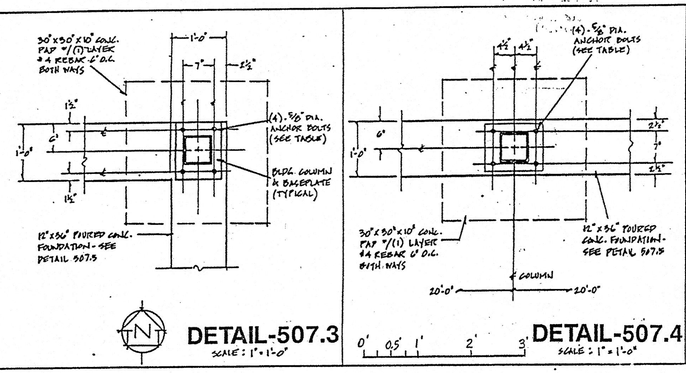

DETAIL-507.3

SCALE: 1" = 1'-0"

DETAIL-507.4

SCALE: 1" = 1'-0"

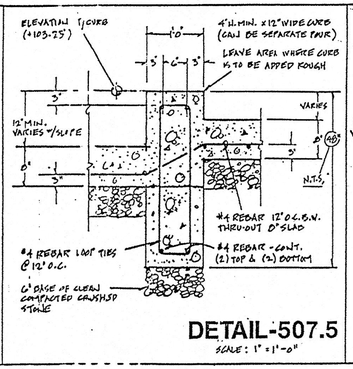

DETAIL-507.5

SCALE: 1" = 1'-0"

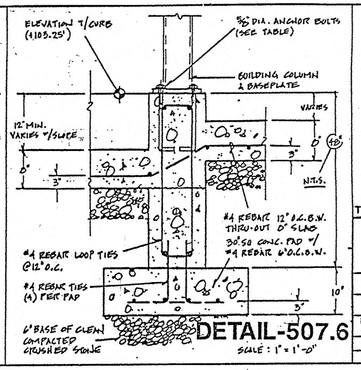

DETAIL-507.6

SCALE: 1" = 1'-0"

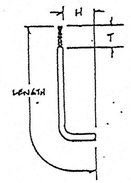

ANCHOR BOLTS				
DIA.	LENGTH	H	T	FINISH REQ.
1/2"	1'-0"	3"	2"	2"
5/8"	1'-6"	4"	2"	3"
3/4"	2'-0"	6"	2 1/2"	3"
7/8"	2'-2"	6"	3"	3"

THIS DRAWING WAS MADE FROM DWG.88-64200-507

REF. DWG. NO.85-64201-506

NO	DESCRIPTION	BY	DATE
2	REVISED PER NOD	RDK	5-01-91
1	REMOVED DESIGNATIONS 'NEW CONCRETE AREA' FROM PLAN AND SECTIONS.		9-6-90
0	ISSUED FOR PERMITTING	NPA	12-5-88

REVISIONS

TITLE

TANKFARM NO. 2
HOSE CONNECTION PIT
CONCRETE PLAN, SECTIONS & DETAILS

CleanHarbors
RECYCLING SERVICES of OHIO, LLC
581 Milliken Drive
Hebron, Ohio 43025

PHONE 312-887-0400

DRAWN WLJ | DATE 5-25-86

FINAL FORM RECYCLE REJECTER

90-64200-507

REV. 2

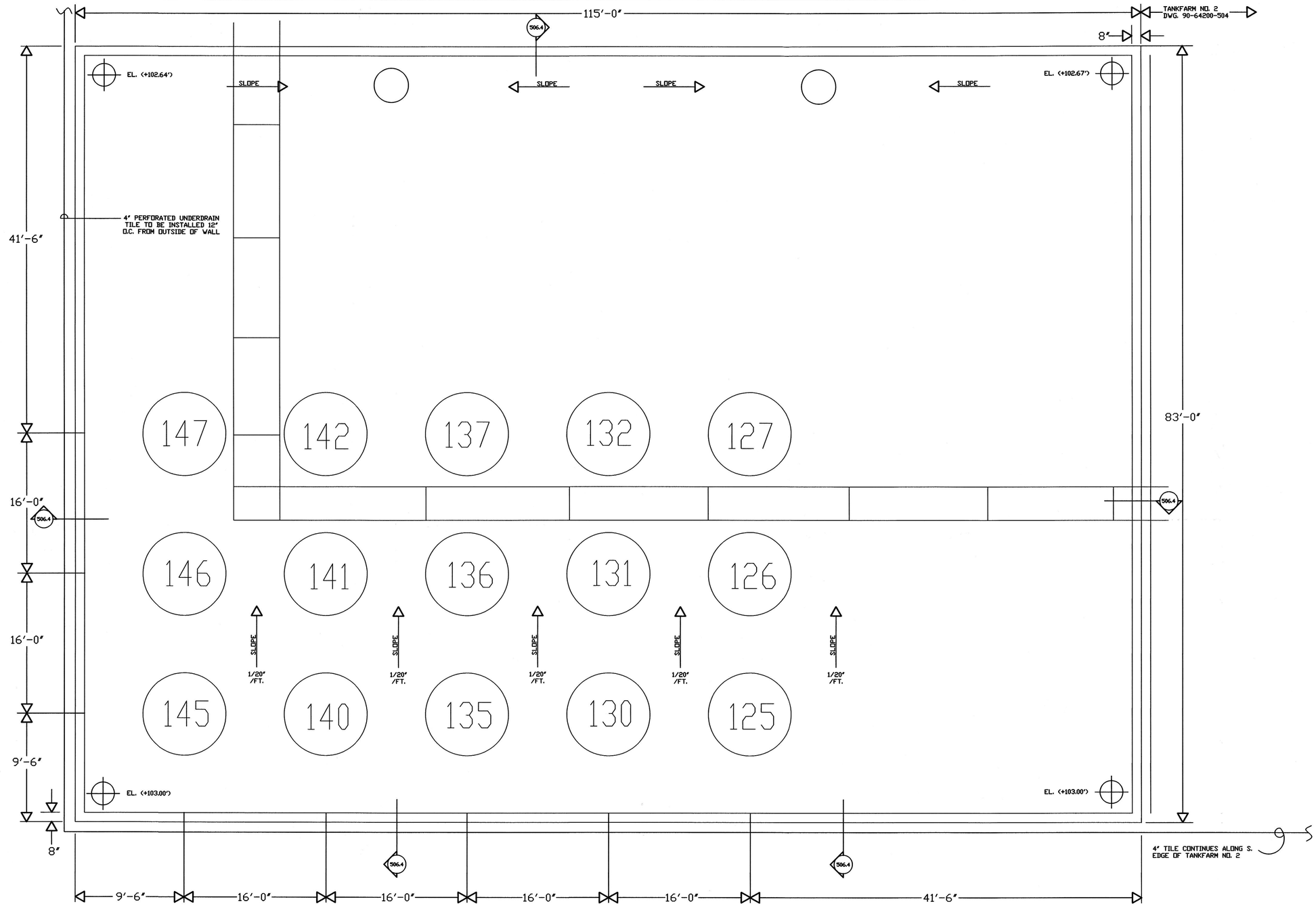

DF=Exhibit 31 Rev. 2

EXHIBIT NO. 31

TANK FARM NO.3

N

0 2.4 4.8 7.2 9.6 12

SCALE IN FEET

THIS DRAWING CONTAINS INFORMATION PROPRIETARY TO CLEAN HARBORS. ANY REPRODUCTIONS, DISCLOSURE OR USE OF THIS DRAWING IS EXPRESSLY PROHIBITED EXCEPT BY CLEAN HARBORS OR AS CLEAN HARBORS MAY AGREE IN WRITTING.

NO.	DESCRIPTION	BY	CK	APPR	DATE
2	RCRA PERMIT RENEWAL UPDATE	KMC			12/12/14
1	REVISED FOR RENEWAL PERMIT	SWL			7/11/02
0	ISSUED FOR PERMITTING	NPA			3/5/86

REVISIONS

TANK FARM NO. 3
CONCRETE CONSTRUCTION PLAN

CleanHarbors
581 MILLIKEN DRIVE, HEBRON, OHIO 43025 PHONE (740) 929-3532

SCALE	DRAWN	CHECKED	PROJ. ENG. APPR.	OPERATION APPR	DATE
5/8"= 12'-0"	NPA		T.S.		3/5/86

HEBRON, OHIO RECYCLE CENTER

DRAWING NO. 90-64200-505

REV 2

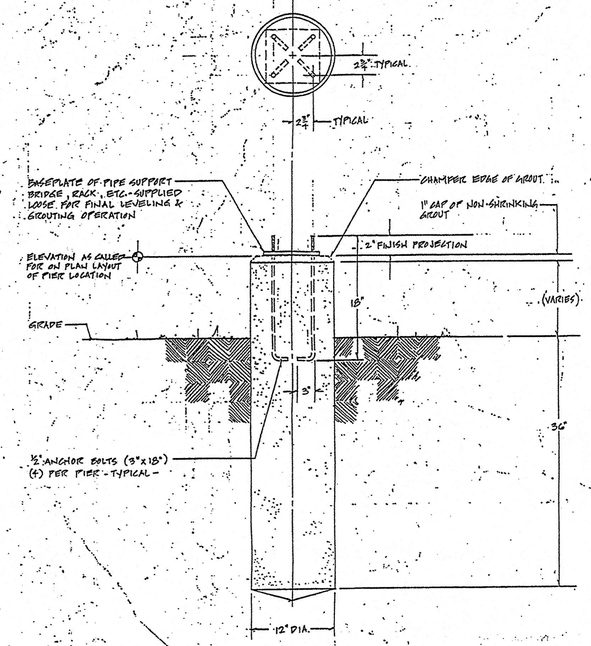

- DETAIL 506.1 - PIER -

SCALE: 1½" = 1'-0"

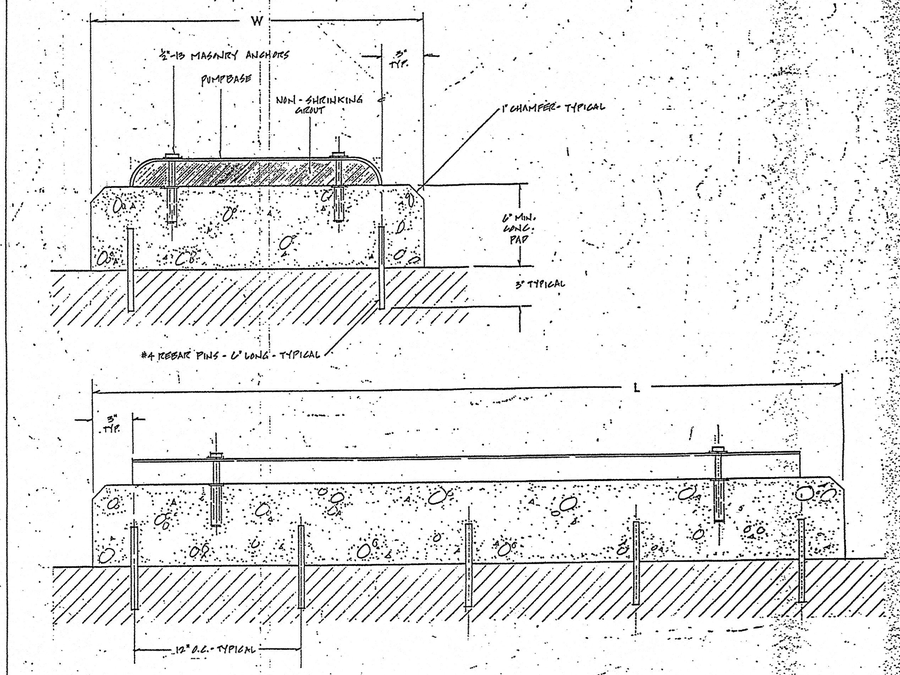

- DETAIL 506.2 - PUMP PAD -

SCALE: 3" = 1'-0"

PUMP NO.	W	L	REMARKS
P-201			
P-202			
P-203			
P-204			
P-205			
P-206			
P-207			
P-208			
P-209			
P-210			
P-211			

- SCHEDULE -

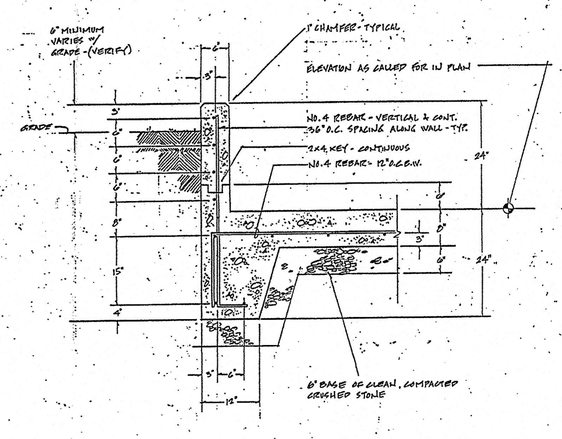

- SECTION 506.3 -

SCALE: 1" = 1'-0"

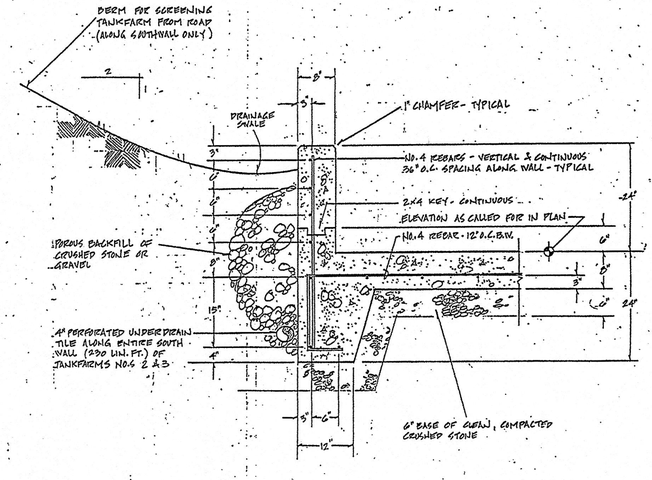

- SECTION 506.4 -

SCALE: 1" = 1'-0"

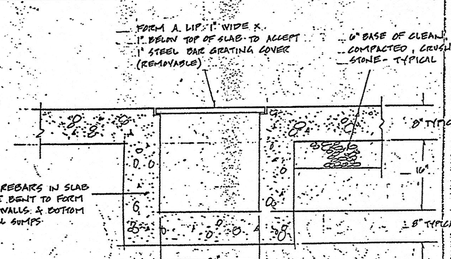

- DETAIL 506.5 -

SCALE: 1" = 1'-0"

EXHIBIT NO. 32

THIS DRAWING WAS MADE FROM DWG. 88-64200-506

CleanHarbors
RECYCLING SERVICES of OHIO, LLC
581 Milliken Drive
Hebron, Ohio 43025
PHONE 2312/697-8460

SURE IV-4C

CONCRETE CONSTRUCTION DETAILS
FOR TANK FARMS NO. 1, 2 & 3.

DRAWN SHOWN	REVISIONS	BY	DATE
DATE 12-11-85	0 ISSUED FOR PERMITTING	FNPA	
DES. NLU	CHK.		
APPR.			
HEBRON, OHIO RECYCLE CENTER	90-64200-506	REV 0	

RCRA PART B
PERMIT DRAWING

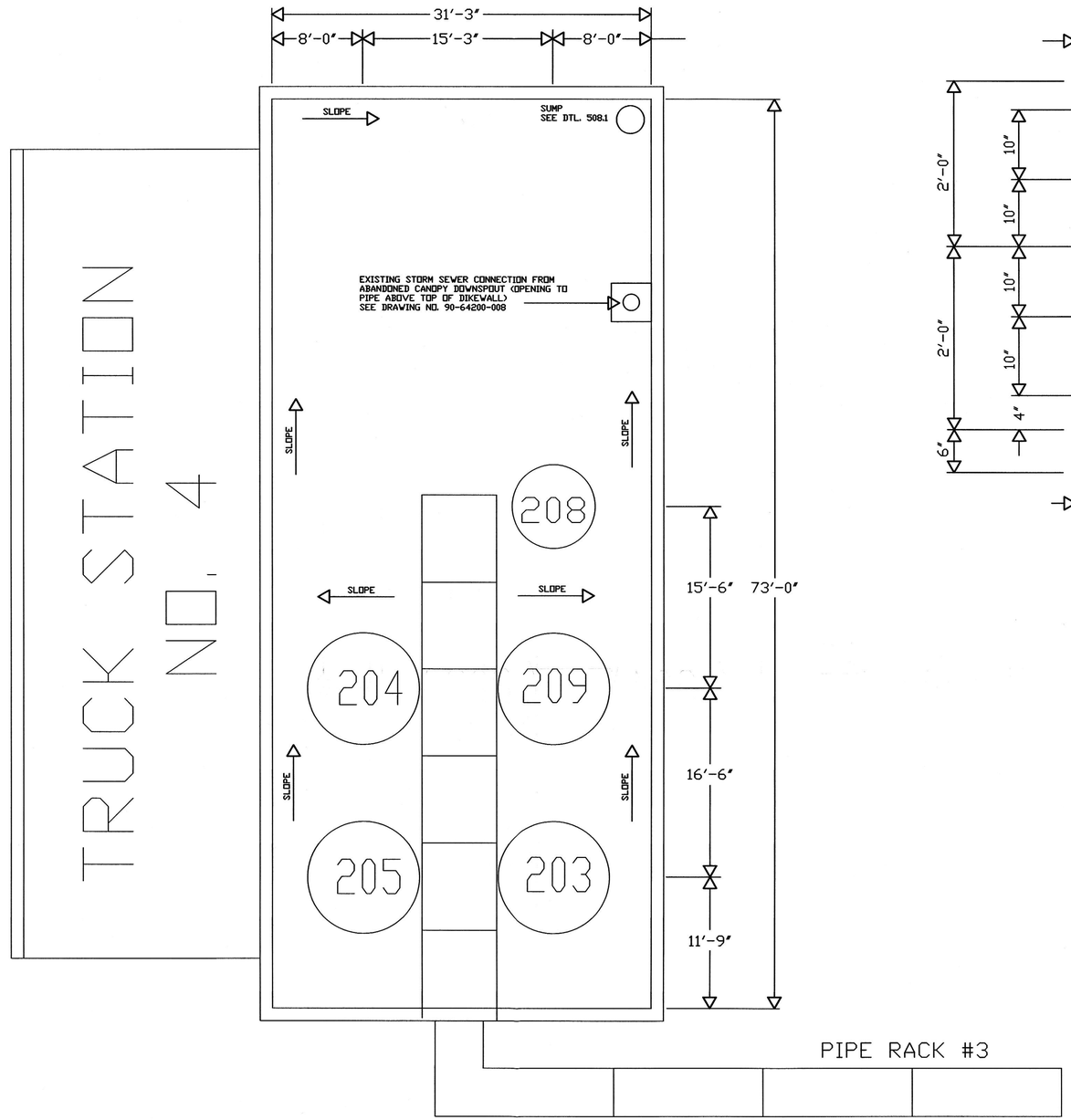

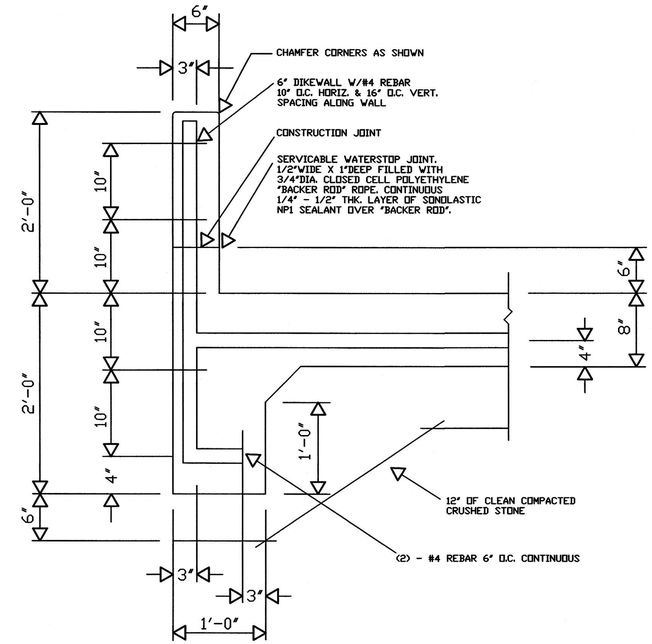

SECTION A-A

SCALE: NONE

DIKE WALL CONSTRUCTION DETAIL

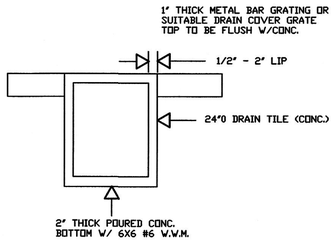

SUMP DTL. 508.1

SCALE: NONE

NOTES:

1. 8" THICK CONCRETE SLAB POURED MONOLITHICALLY WITH CURB AND FOOTING PORTION - REINFORCING TO BE #4 REBAR 6" O.C.B.W.
2. INTERNAL DIKE CONTAINMENT SURFACES TO BE COATED WITH A CHEMICALLY RESISTANT COMPOUND
3. CONCRETE WILL DEVELOP 4000 psi MIN. COMPRESSIVE STRENGTH @ 28 DAYS.

TANK FARM NO.4

N

0 2 4 6 8 10

SCALE IN FEET

THIS DRAWING CONTAINS INFORMATION PROPRIETARY TO CLEAN HARBORS. ANY REPRODUCTIONS, DISCLOSURE OR USE OF THIS DRAWING IS EXPRESSLY PROHIBITED EXCEPT BY CLEAN HARBORS OR AS CLEAN HARBORS MAY AGREE IN WRITTING.

DF=Exhibit 33 Rev. 4

EXHIBIT NO. 33

NO.	DESCRIPTION	BY	CK	APPR	DATE
4	RCRA PERMIT RENEWAL UPDATE	KMC			12/12/14
3	REVISED FOR PERMIT RENEWAL	SWL			7/12/02
2	REVISED PER NOD	RDK			5/1/91
1	FOR PART "B" PERMIT	RDK			12/27/89
0	FOR RCRA PART B PERMIT	KJM			12/7/88

REVISIONS

TANK FARM NO. 4
CONCRETE PLAN SECTION & DETAILS

CleanHarbors

581 MILLIKEN DRIVE, HEBRON, OHIO 43025 PHONE (740) 929-3532

SCALE	DRAWN	CHECKED	PROJ. ENG. APPR.	OPERATION APPR	DATE
AS NOTED	KJM				12/7/88

HEBRON, OHIO
RECYCLE CENTER

DRAWING NO. 90-64200-508

REV 4

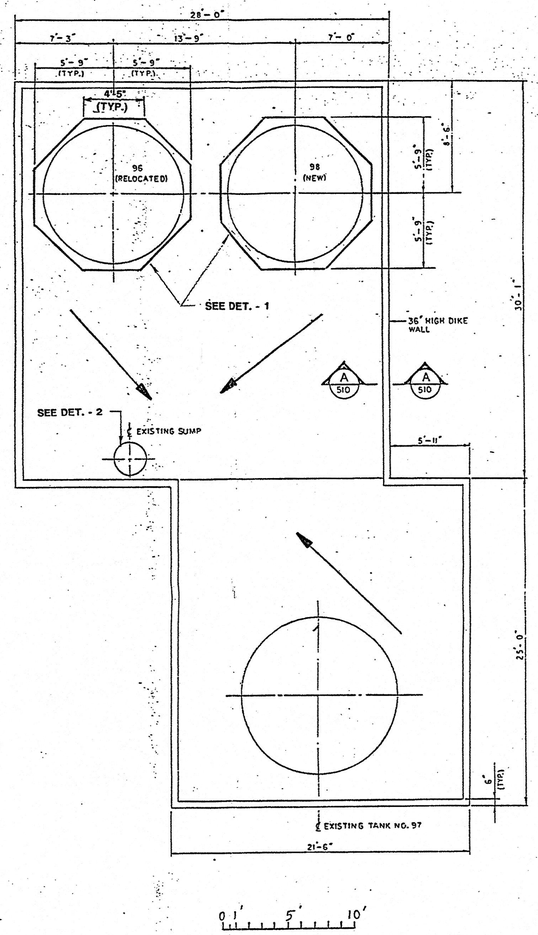

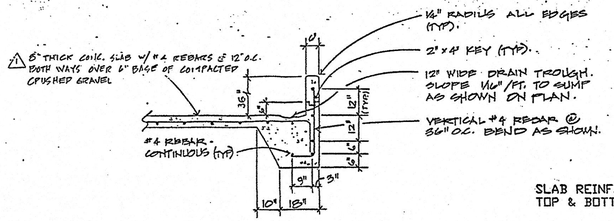

SECTION "A-A"
36" HT. DIKE DTL.
SCALE: 1/2" = 1'-0"

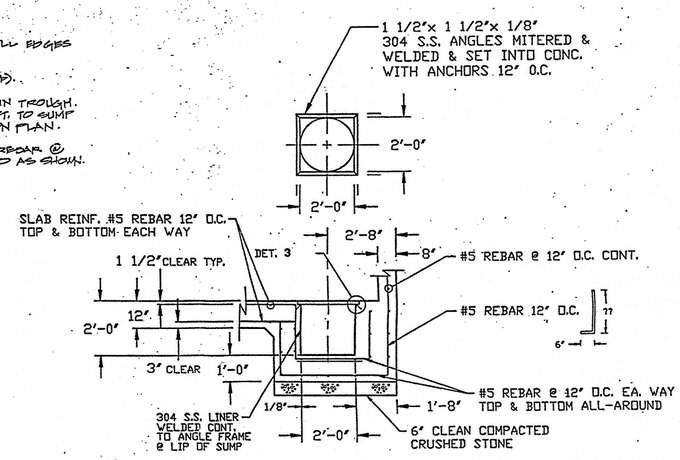

DETAIL- 2
SCALE : 3/8" = 1'

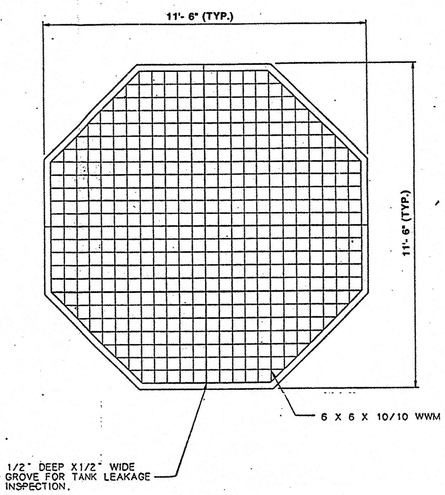

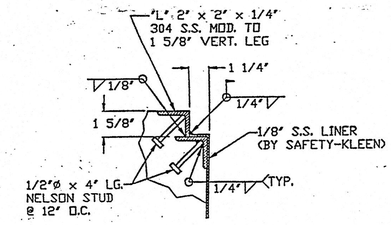

DETAIL - 3
N.T.S.

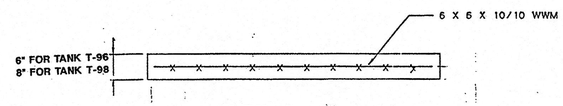

DETAIL - 1
SCALE: N.T.S.

EXHIBIT NO. 35

N

RCRA PART B PERMIT DRAWING

THIS DRAWING WAS MADE FROM DWG. 88-64200-510

NO	DESCRIPTION	BY	CHK.	APPR.	DATE
2	ISSUED FOR PART "B" PERMIT NOD	RDK			2-28-92
1	REVISED PER NOD	RDK			5-16-91
0	FOR PART B PERMIT	NPA			

REVISIONS

TITLE: TANKFARM NO. 6
CONCRETE CONSTRUCTION PLAN
SECTION & DETAIL

CleanHarbors
RECYCLING SERVICES of OHIO, LLC
581 Milliken Drive
Hebron, Ohio 43025

[redacted]

SCALE: AS SHOWN | CHKD APPR | DATE: 12.4.88

HEBRON, OHIO RECYCLE CENTER | DRAWING NO: 90-64200-510 | REV: 2

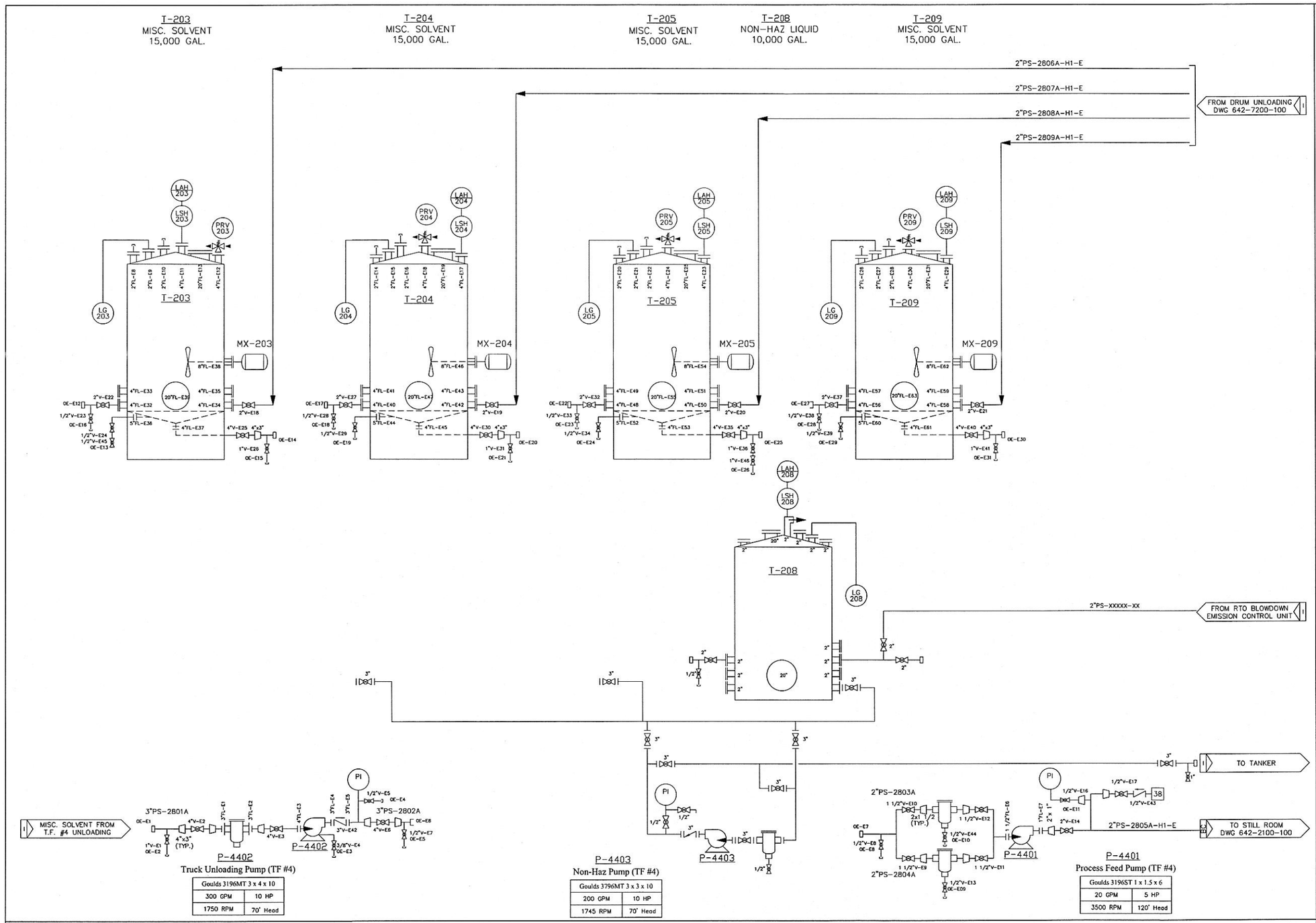

NOTE:
ALL HIGH LEVEL ALARM SIGNALS ARE INTERLOCKED WITH ALARM PANELS, OPERATOR TERMINALS AND, WHEN APPLICABLE, TO HIGH VOLUME PUMPS

LEGEND

LAH – LEVEL ALARM HIGH
VS – STEEL VALVE
VB – BRONZE VALVE
PI – PRESSURE INDICATOR
EJ – EXPANSION JOINT

11	COOLING WATER SUPPLY	15	STEAM CONDENSATE RETURN	21	NITROGEN
12	COOLING WATER RETURN	16	INSTRUMENT AIR	22	BLOWDOWN/FLARE
13	STEAM SUPPLY	19	NATURAL GAS	24	PLANT WATER
27	VENT TO ATMOSPHERE	35	TREATED BFW	38	PLANT AIR
31	WATER SEWER	36	SEAL OIL SUPPLY		
32	DISCHARGE TO GRADE	37	SEAL OIL RETURN		

DF=Exhibit 36 Rev. 5

EXHIBIT NO. 36

NO.	DESCRIPTION	BY	P MGR APPR	PROC APPR	DATE
5	RCRA PERMIT RENEWAL UPDATE	KMC			12/12/14
4	UPDATED FOR RENEWAL PERMIT	SWL			7/26/02
3	ADDED PROPOSED STORAGE TANKS	MBM			4/23/97
2	REVISED PER NOD 1994	MBH		TS	10/17/94
1	ISSUED FOR PART "B" PERMIT NOD	RDK			3/5/92
0	ISSUED FOR PART "B" PERMIT	SPM			8/13/90

REVISIONS

PROPRIETARY STATEMENT

THIS DRAWING IS THE EXCLUSIVE PROPERTY OF CLEAN HARBORS AND IS PROPRIETARY AND CONFIDENTIAL INFORMATION. THIS DRAWING AND THE INFORMATION CONTAINED THEREIN MUST NOT BE DUPLICATED, USED, DIVULGED, REPRODUCED, COPIED, DISCLOSED OR APPROPRIATED IN WHOLE OR IN PART FOR ANY PURPOSE OTHER THAN AS EXPRESSLY AUTHORIZED BY CLEAN HARBORS. THIS DRAWING MUST BE RETURNED PROMPTLY UPON REQUEST.

TITLE

TANK FARM NO. 4
PROPOSED MISC. SOLVENT FUELS
PROCESS FLOW DIAGRAM

CleanHarbors
581 MILLIKEN DRIVE, HEBRON, OHIO 43025 PHONE (740) 929-3532

SCALE	BY	CHKD	APPROVED	OPERATIONS	DATE
NONE	CW		DFS		12/1/88

HEBRON, OHIO
RECYCLE CENTER

DRAWING NUMBER 90-64200-400

REV. NO. 5

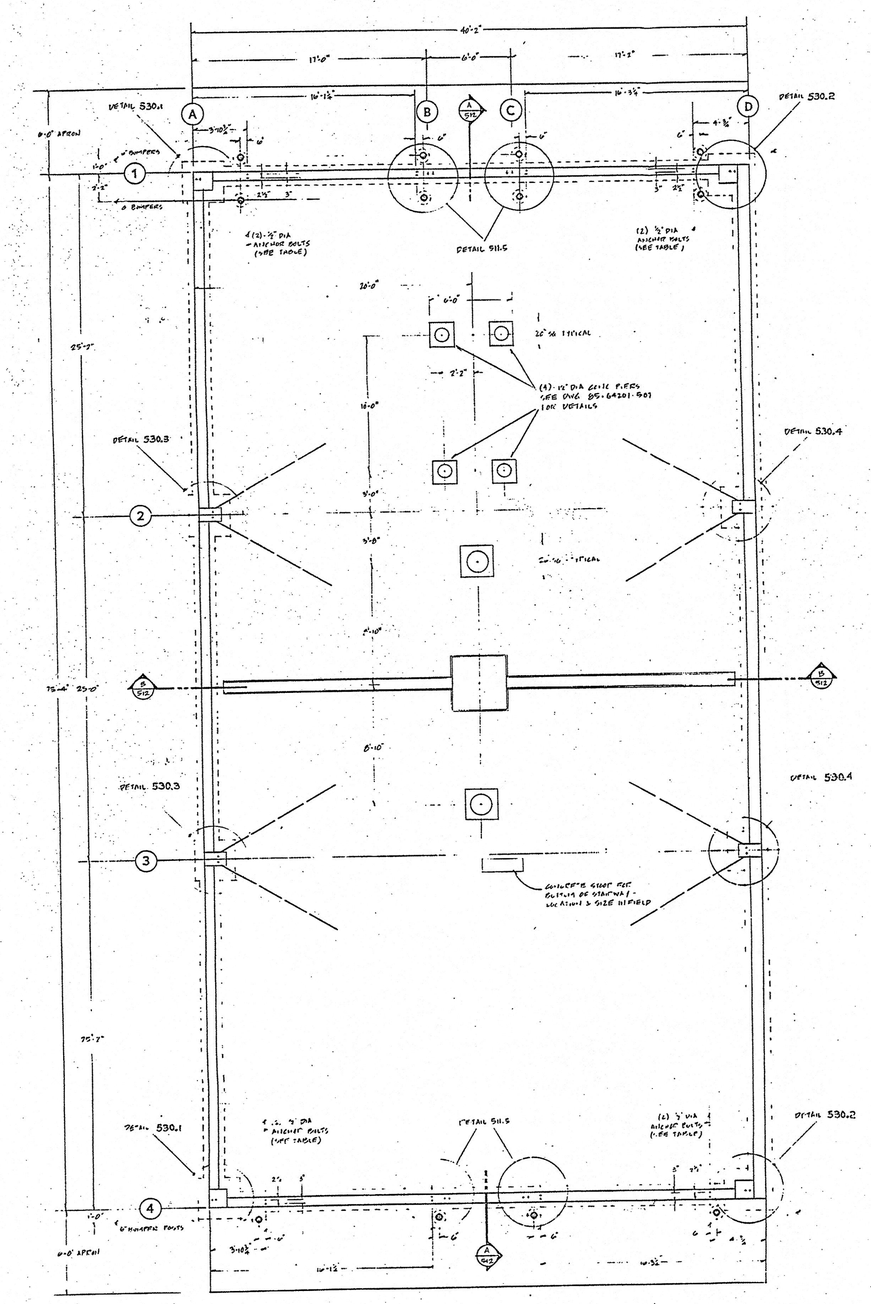

FOUNDATION PLAN

SCALE: ⅛" = 1'-0"

NOTE:
THIS IS AN ENCLOSED BUILDING.

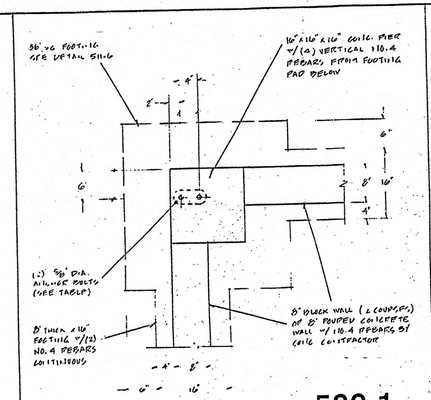

530.1

SCALE: 1" = 1'-0"

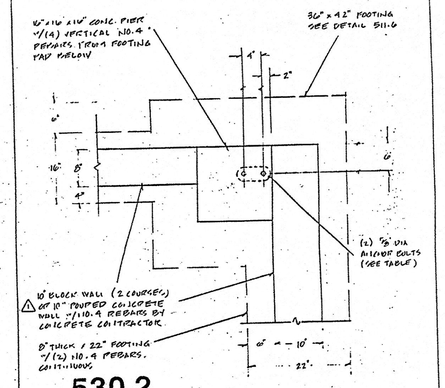

530.2

SCALE: 1" = 1'-0"

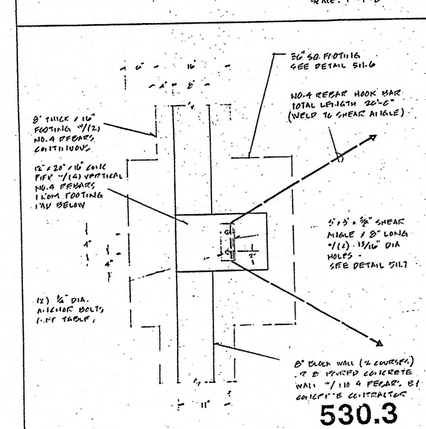

530.3

SCALE: 1" = 1'-0"

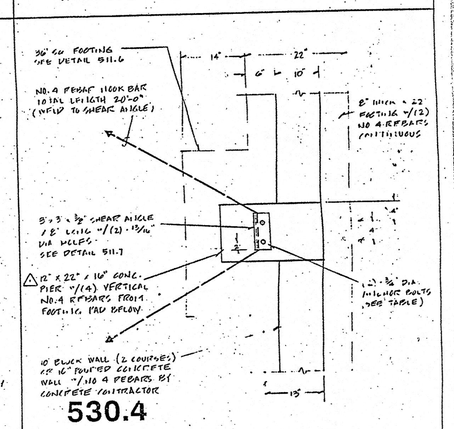

530.4

SCALE: 1" = 1'-0"

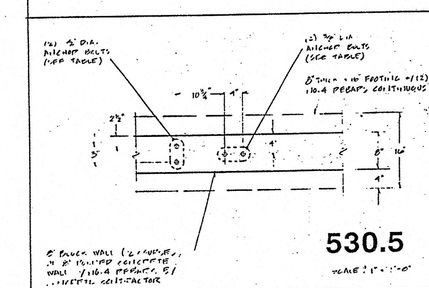

530.5

SCALE: 1" = 1'-0"

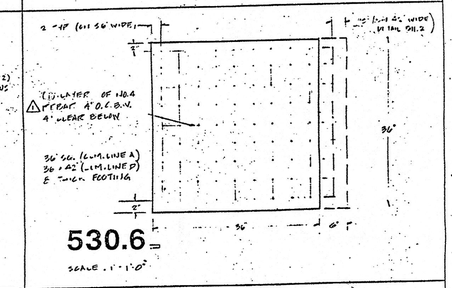

530.6

SCALE: 1" = 1'-0"

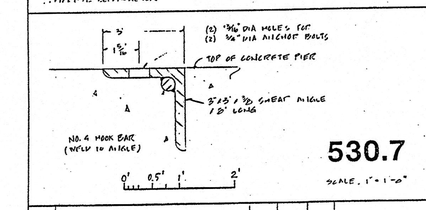

530.7

SCALE: 1" = 1'-0"

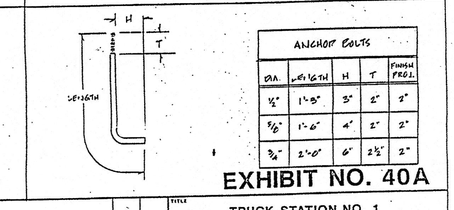

ANCHOR BOLTS				
DIA.	LENGTH	H	T	FINISH PROJ.
½"	1'-8"	3"	2"	2"
⅝"	1'-6"	4"	2"	2"
¾"	2'-0"	6"	2½"	2"

EXHIBIT NO. 40A

NO.	DESCRIPTION	BY	DATE
1	ADDED ENCLOSED BLDG. NOTE	MBH	4/23/97
2	ISSUED FOR PART "B" PERMIT		9/20/96

REVISIONS

TITLE: TRUCK STATION NO. 1 CONCRETE CONSTRUCTION PLAN & DETAILS

CleanHarbors
RECYCLING SERVICES of OHIO, LLC
581 Milliken Drive
Hebron, Ohio 43025

FIGURE IV-6

DRAWN: WLJ
DATE: 2-1-96

HEBRON, OHIO
DRAWING NO. 90-64200-530
REV. 1

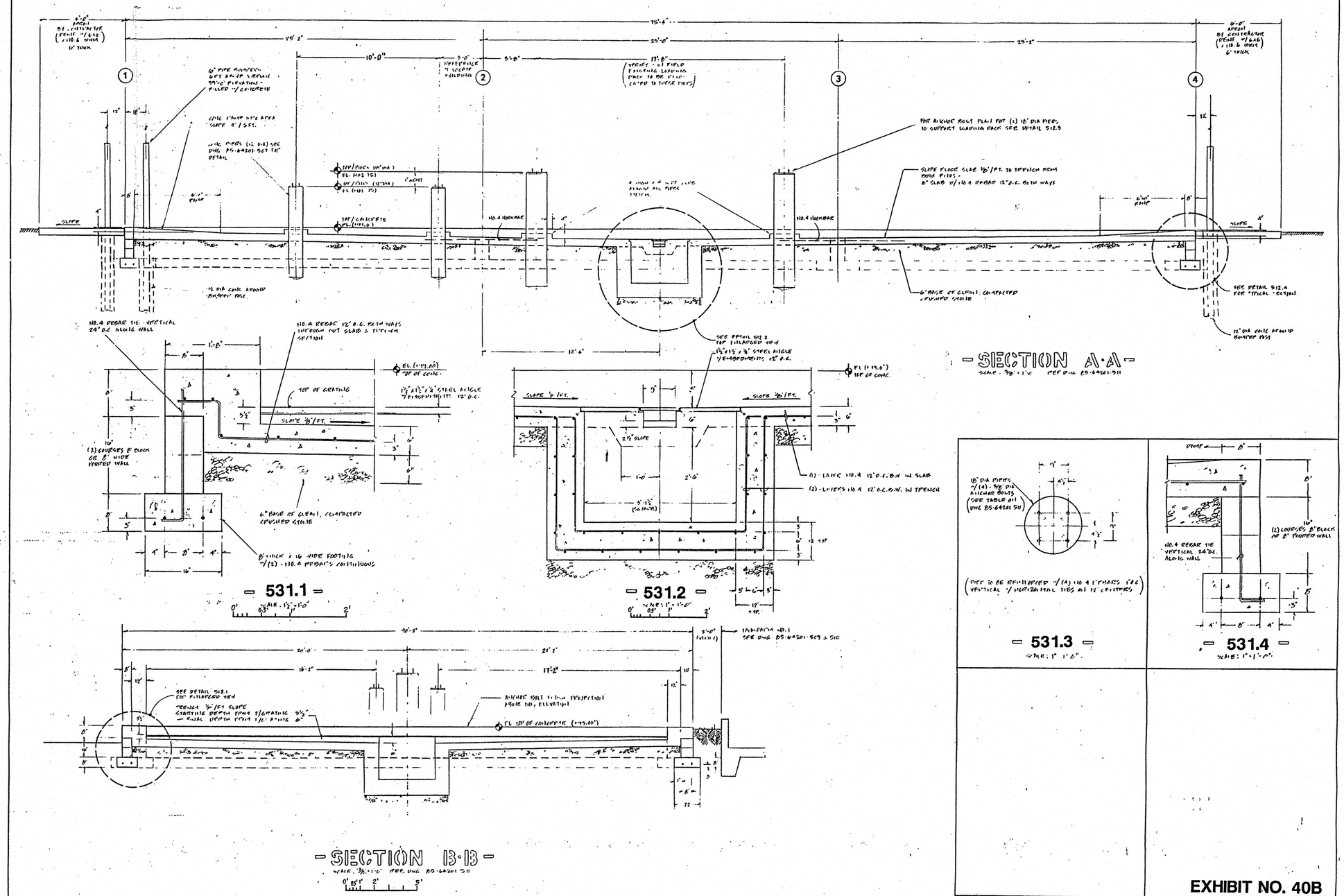

NOTE:
THIS IS AN ENCLOSED BUILDING.

NO	DESCRIPTION	BY	DATE
3	ADDED ENCLOSED BLDG. NOTE	MBH	4/20/97
2	REVISED PER NOD	RDK	5-01-91
1	ISSUED FOR PART B PERMIT	WLJ	9-20-90

REVISIONS

EXHIBIT NO. 40B

TITLE
TRUCK STATION NO.1
SECTIONS & DETAILS

CleanHarbors
RECYCLING SERVICES of OHIO, LLC
581 Milliken Drive
Hebron, Ohio 43025

DRAWN: WLJ DATE: 2-2-86

HEBRON, OHIO RECYCLE CENTER

DRAWING NO: 90-64200-531 REV: 3

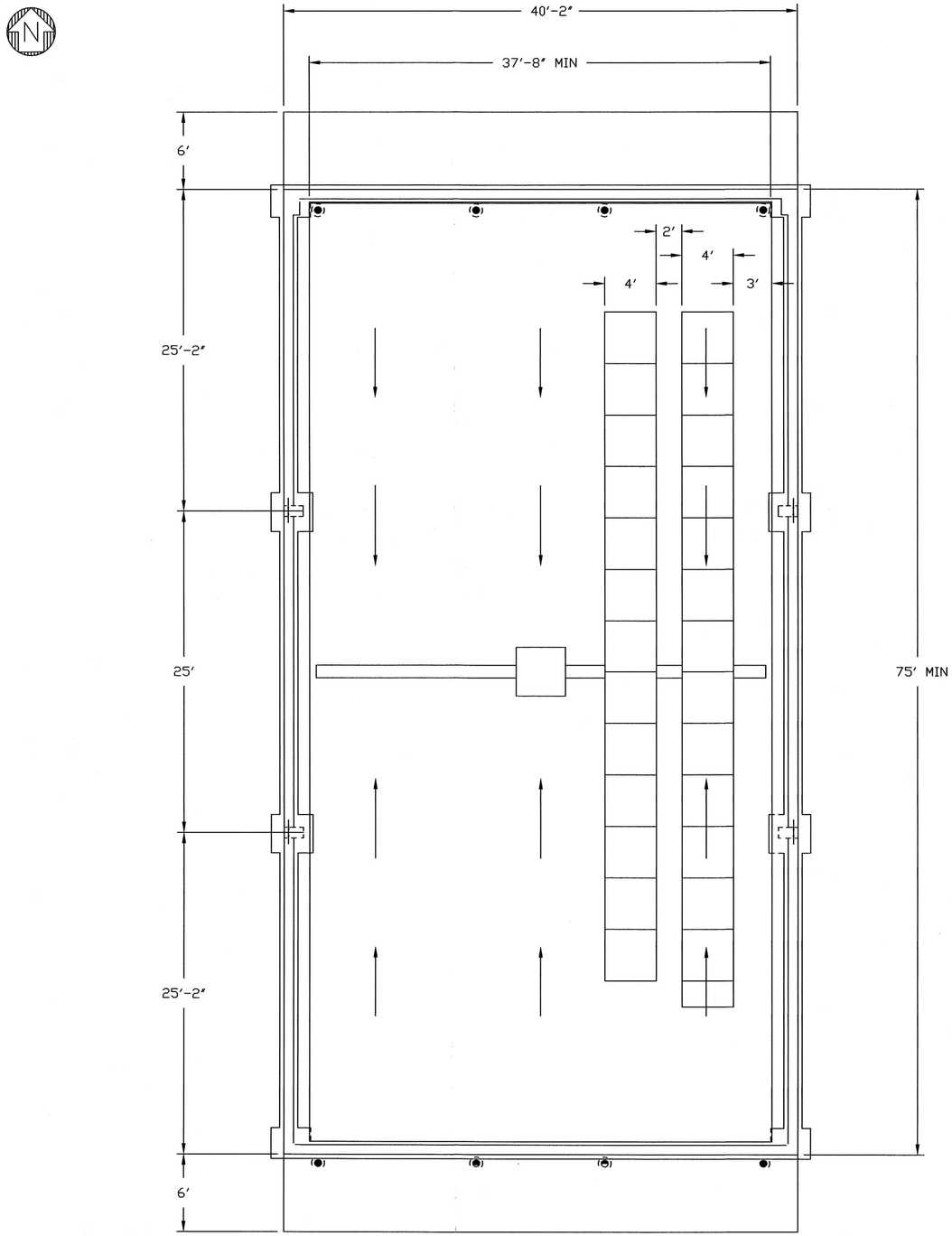

TRUCK STATION NO. 1 - CONTAINMENT CALCULATIONS

CONTAINMENT DESIGN BASIS

26.5 PALLET POSITIONS OF (4) 55 GAL DRUMS STACKED 3 HIGH	= 318 DRUMS
17,490 GAL x 10%	= 1749 GAL REQ'D

CONTAINMENT VOLUME

75' x 37.66' x (.375') AVERAGE FLOOR DEPTH OF 4 1/2"	= 1059.2 CU. FT
3.8' x 3.8' x 3'	= 43.3 CU. FT (SUMP)
1059.2 CU. FT + 43.3 CU. FT	= 1102.5 CU. FT
1102.5 CU. FT x 7.48 GAL/CU. FT	= 8246.7 GAL

LESS DISPLACEMENTS

106 DRUMS $\times \pi (1')^2 \times (.375')$	= 124.9 CU. FT
MISC. PUMP PADS, PIERS, ETC.	= 100 CU. FT
124.9 CU. FT + 100 CU. FT	= 224.9 CU. FT
224.9 CU. FT x 7.48 GAL/CU. FT	= 1682.2 GAL (TOTAL DISPLACEMENT)
8246.7 GAL - 1682.2 GAL	= 6564.5 GAL (NET CONTAINMENT)
6564.5 GAL - 1749 GAL	= 4815.5 GAL (SAFETY FACTOR)

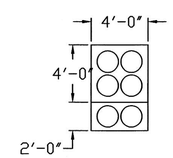

TYPICAL DRUM ARRANGEMENT IN PALLETS
N.T.S.

NOTES:
FOR CONSTRUCTION PLAN & DETAILS, REFER TO EXHIBITS NO. 40A & 40B DWG'S 90-64200-530 & 531.

NOTE:
THIS IS AN ENCLOSED BUILDING

DF=Exhibit 40C Rev. 3

EXHIBIT NO. 40C

NO.	DESCRIPTION	BY	CK	APPR	DATE
3	RCRA PERMIT RENEWAL UPDATE	KMC			12/12/14
2	ADDED ENCLOSED BLDG. NOTE	MBH			04/24/92
1	ISSUED FOR PART B PERMIT NOD	RDK			3/02/92
0	ISSUED FOR PART B PERMIT	M.O'C			9/25/90

REVISIONS

TRUCK STATION NO. 1
ALTERNATE DRUM STORAGE
W/ CONTAINMENT CALCULATIONS

CleanHarbors
581 MILLIKEN DRIVE, HEBRON, OHIO 43025 PHONE (740) 929-3532

SCALE	DRAWN	CHECKED	PROJ. ENG. APPR.	OPERATION APPR	DATE
3/16"=1'-0"	M.O'C				9/25/90

HEBRON, OHIO
RECYCLE CENTER

DRAWING NO. 90-64200-204

REV 3

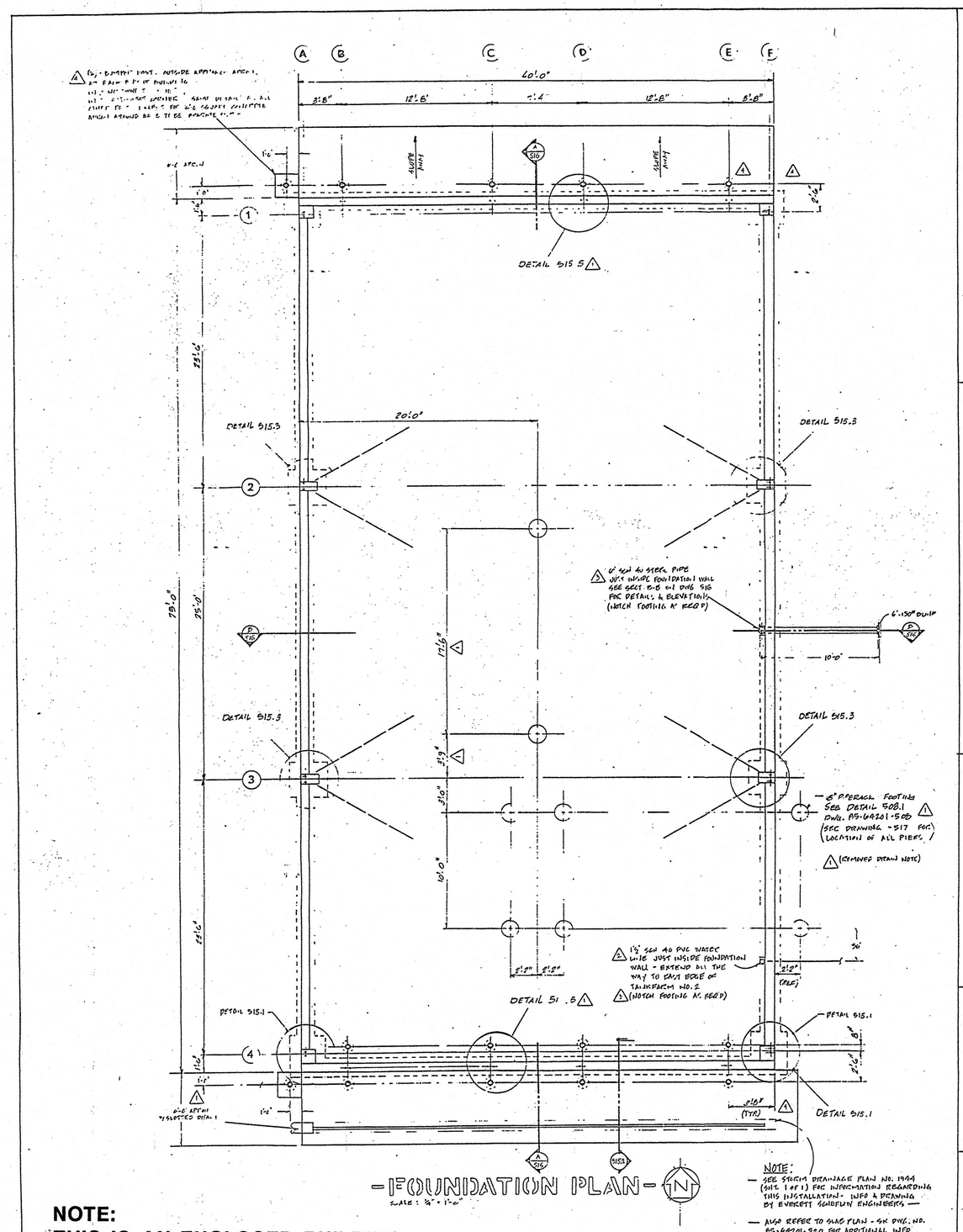

FOUNDATION PLAN

SCALE: 3/8" = 1'-0"

NOTE:
- SEE STORM DRAINAGE PLAN NO. 1944 (SHT. 1 of 1) FOR INFORMATION REGARDING THIS INSTALLATION. INFO & DRAWING BY EVERETT GUDEMAN ENGINEERS
- ALSO REFER TO SITE PLAN - SK DWG. NO. 85-64201-520 FOR ADDITIONAL INFO.

NOTE:
THIS IS AN ENCLOSED BUILDING.

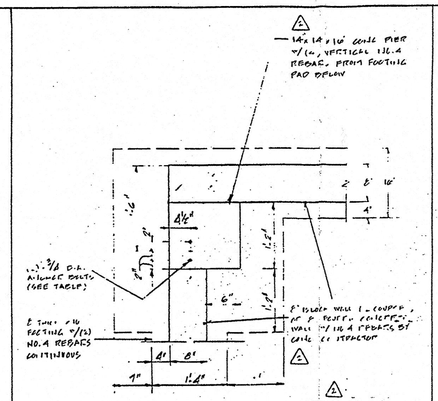

532.1
SCALE: 1" = 1'-0"

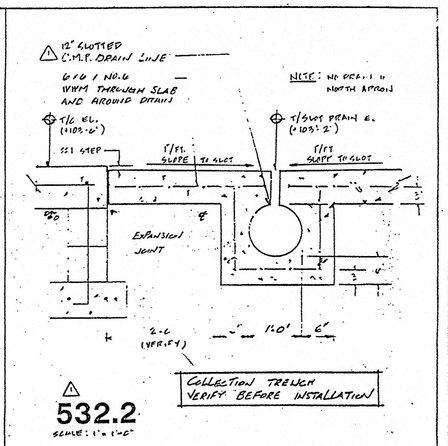

532.2
SCALE: 1" = 1'-0"

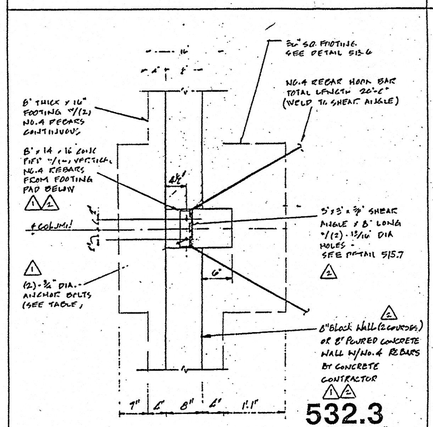

532.3
SCALE: 1" = 1'-0"

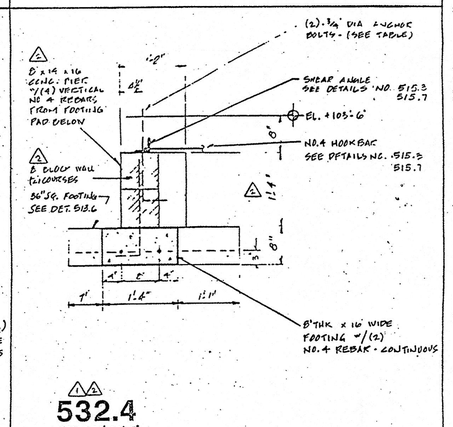

532.4
SCALE: 1" = 1'-0"

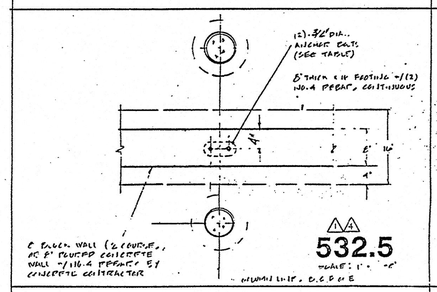

532.5
SCALE: 1" = 1'-0"

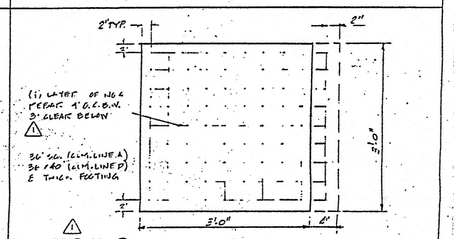

532.6
SCALE: 1" = 1'-0"

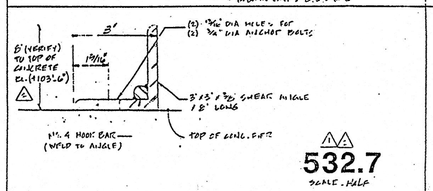

532.7
SCALE: HALF

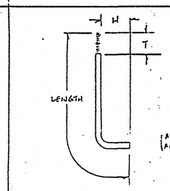

ANCHOR BOLTS				
DIA.	LENGTH	H	T	FINISH PROJ.
1/2"	1'-3"	3"	2"	2"
5/8"	1'-6"	4"	2"	2"
3/4"	2'-6"	6"	2 1/2"	2"

(ADDED 5/8" ANCHOR BOLT)

EXHIBIT NO. 41A

RCRA PART B PERMIT DRAWING

NO	DESCRIPTION	BY	DATE
1	ADDED ENCLOSED BLDG. NOTE	MBH	4/23/97
0	FOR PART B PERMIT		1/2/96

TITLE: TRUCK STATION NO. 2
CONCRETE CONSTRUCTION DRAWING

Clean Harbors
RECYCLING SERVICES of OHIO, LLC
581 Milliken Drive
Hebron, Ohio 43025

GURE
PHONE 317-297-8456
DRAWN: SPM DATE: 5-3-96

HEBRON, OHIO

DRAWING NO: 90-64200-532 REV: 1

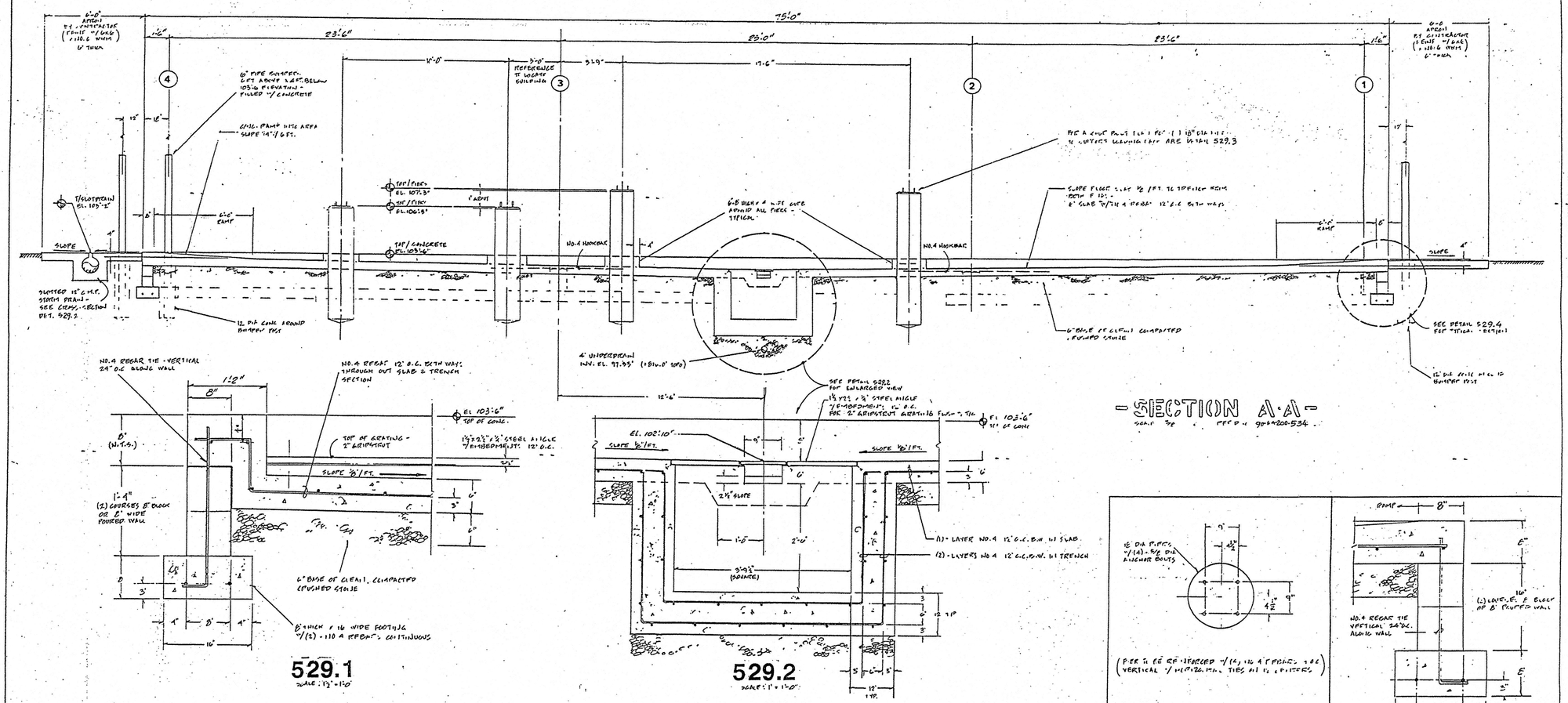

-SECTION A-A-

SCALE: 1/8" REF. DWG. 90-64200-534

529.1

SCALE: 1/2" = 1'-0"

529.2

SCALE: 1" = 1'-0"

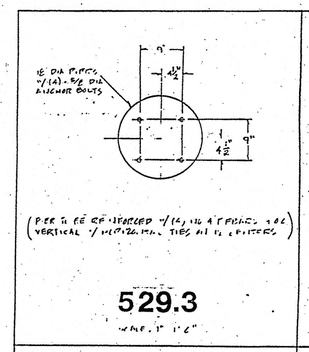

529.3

SCALE: 1" = 1'-0"

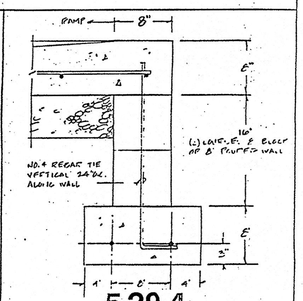

529.4

SCALE: 1" = 1'-0"

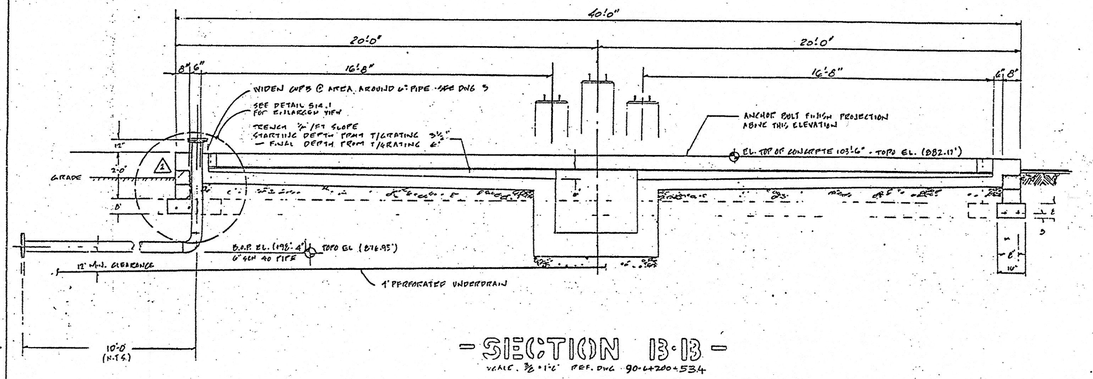

-SECTION B-B-

SCALE: 3/8" = 1'-0" REF. DWG. 90-64200-534

NOTE: THIS VIEW LOOKING SOUTH

NOTE:
THIS IS AN ENCLOSED BUILDING.

RCRA PART B PERMIT DRAWING

EXHIBIT NO. 41B

NO	DESCRIPTION	BY	DATE
1	ADDED ENCLOSED BLDG. NOTE	MBH	042597
0	FOR PART B PERMIT		9/20/90

REVISIONS

TITLE: TRUCK STATION NO. 2 SECTION AND DETAILS

CleanHarbors
RECYCLING SERVICES of OHIO, LLC
581 Millikin Drive
Hebron, Ohio 43025
PHONE 312 887-8000

DRAWN: SPN DATE: 5-3-6-6

HEBRON, OHIO
RECYCLE CENTER

DRAWING NO: 90-64200-529

SHT. 1

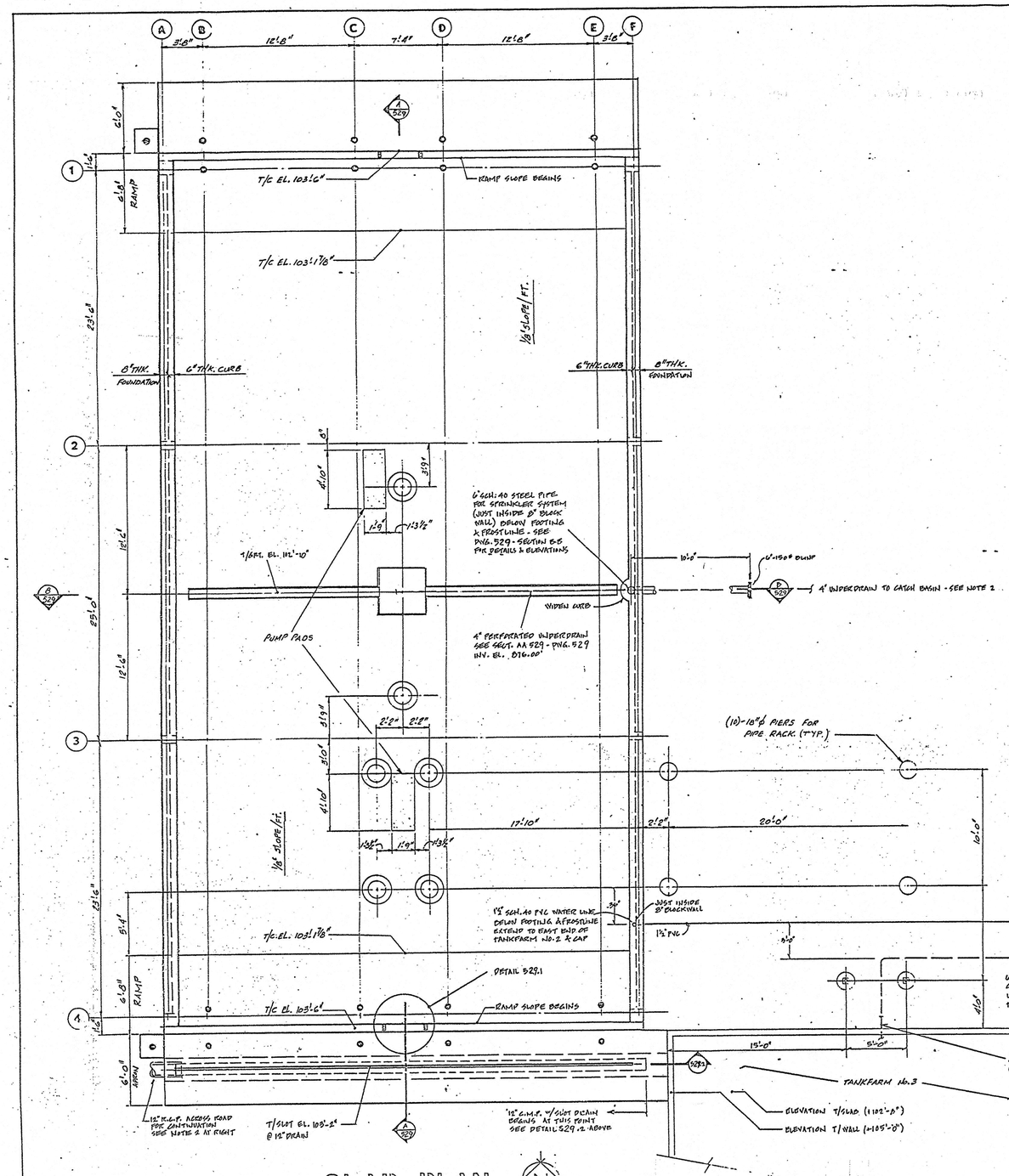

-SLAB PLAN-

SCALE: 1/8" = 1'-0"

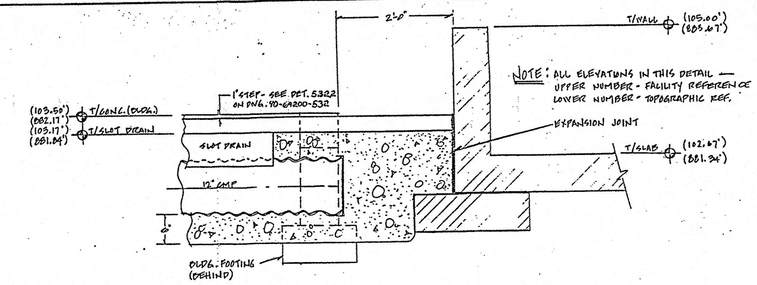

534.2

SCALE: 1" = 1'-0"

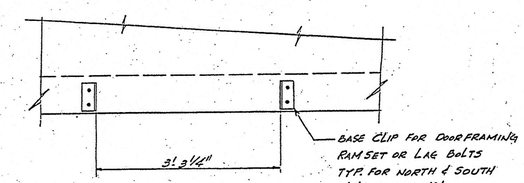

534.1

SCALE: 1" = 1'-0"

-NOTES-

1. ALL ELEVATIONS SHOWN FOR CONCRETE WORK TAKEN FROM FACILITY REFERENCE SYSTEM - STILLROOM FLOOR ELEVATION - (+100.00')

   ALL ELEVATIONS SHOWN FOR STORM DRAINAGE TAKEN FROM FACILITY TOPOGRAPHIC SYSTEM - STILLROOM FLOOR ELEVATION - (+098.67')

2. WORK THIS DRAWING WITH SAFETY-KLEEN DWG., NO. 90-64200-529 & 90-64200-532

   ALSO WITH STORM DRAINAGE PLAN BY EVERETT SCHEFLOW ENGINEERS JOB NO. 1944

NOTE:
THIS IS AN ENCLOSED BUILDING.

EXHIBIT NO. 41C

RCRA PART B PERMIT DRAWING

NO	DESCRIPTION	BY	DATE
1	ADDED ENCLOSED BLDG. NOTE	MBH	04/25/97
0	FOR PART B PERMIT		9/20/96

REVISIONS

TITLE: TRUCK STATION NO. 2 PLAN SECTIONS AND DETAILS

Clean Harbors
RECYCLING SERVICES of OHIO, LLC
581 Milliken Drive
Hebron, Ohio 43025

PHONE 312 697 5400

DRAWN: SPM DATE: 5-3-96

HEBRON, OHIO RECYCLE CENTER

DRAWING NO. 90-64200-534 REV. 1

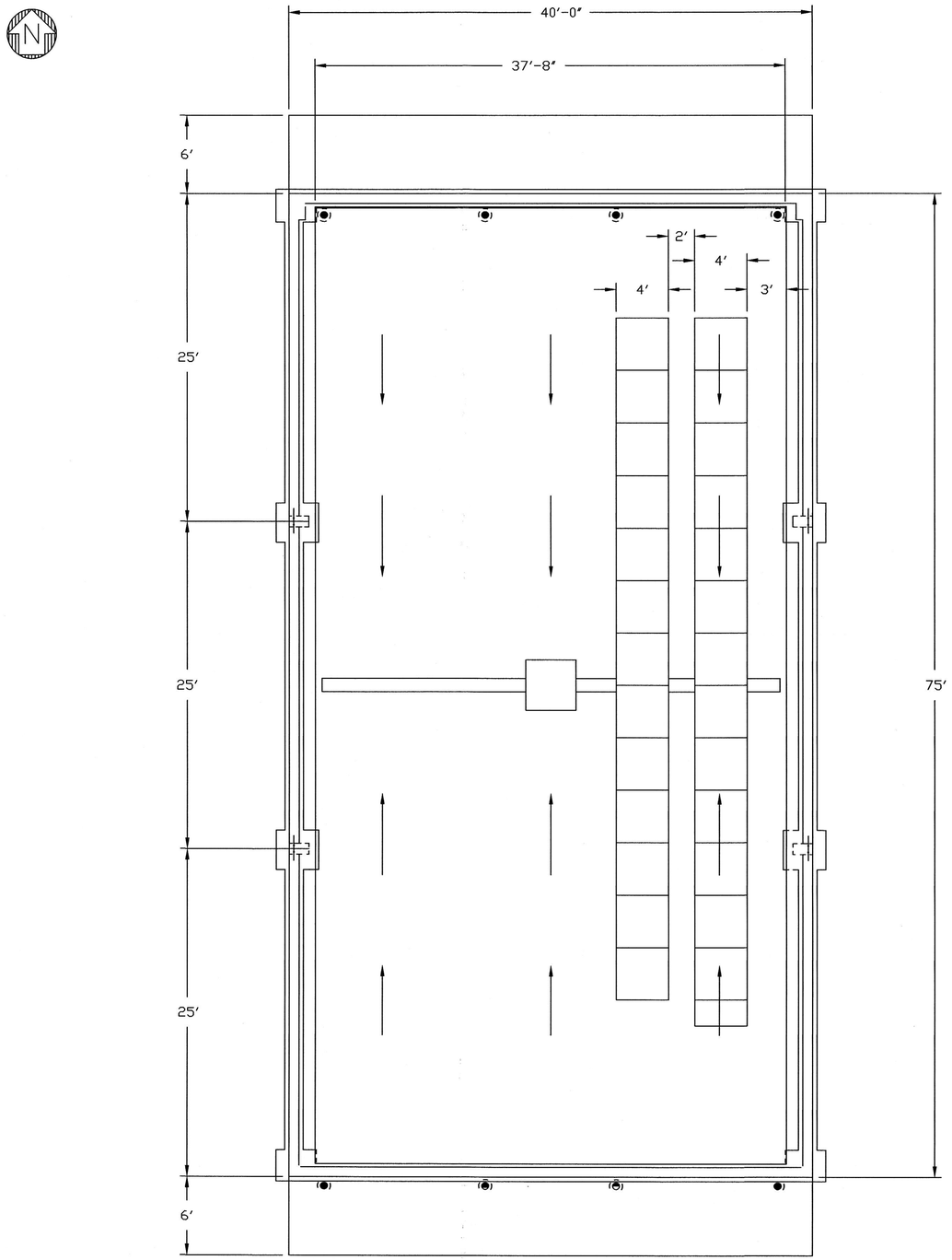

TRUCK STATION NO. 2 - CONTAINMENT CALCULATIONS

CONTAINMENT DESIGN BASIS

26.5 PALLET POSITIONS OF (4) 55 GAL DRUMS STACKED 3 HIGH	= 318 DRUMS
17,490 GAL x 10%	= 1749 GAL REQ'D

CONTAINMENT VOLUME

75' x 37.66' x (.375') AVERAGE FLOOR DEPTH OF 4 1/2"	= 1059.2 CU. FT
3.8' x 3.8' x 3'	= 43.3 CU. FT (SUMP)
1059.2 CU. FT + 43.3 CU. FT	= 1102.5 CU. FT
1102.5 CU. FT x 7.48 GAL/CU. FT	= 8246.7 GAL

LESS DISPLACEMENTS

106 DRUMS $\times \pi (1')^2 \times (.375')$	= 124.9 CU. FT
MISC. PUMP PADS, PIERS, ETC.	= 100 CU. FT
124.9 CU. FT + 100 CU. FT	= 224.9 CU. FT
224.9 CU. FT x 7.48 GAL/CU. FT	= 1682.2 GAL (TOTAL DISPLACEMENT)
8246.7 GAL - 1682.2 GAL	= 6564.5 GAL (NET CONTAINMENT)
6564.5 GAL - 1749 GAL	= 4815.5 GAL (SAFETY FACTOR)

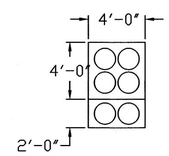

TYPICAL DRUM ARRANGEMENT IN PALLETS

N.T.S.

NOTES:

FOR CONSTRUCTION PLAN & DETAILS, REFER TO EXHIBITS NO. 41A, 41B & 41C DWG'S 90-64200-532, 533 & 534.

NOTE:
THIS IS AN ENCLOSED BUILDING

EXHIBIT NO. 41D

DF=Exhibit 41D Rev. 3

NO.	DESCRIPTION	BY	CK	APPR	DATE
3	RCRA PERMIT RENEWAL UPDATE	KMC			12/12/14
2	ADDED ENCLOSED BLDG. NOTE	MBH			04/24/92
1	ISSUED FOR PART B PERMIT NOD	RDK			3/02/92
0	ISSUED FOR PART B PERMIT	M.O'C			9/25/90

REVISIONS

TRUCK STATION NO. 2
ALTERNATE DRUM STORAGE
W/ CONTAINMENT CALCULATIONS

CleanHarbors®
581 MILLIKEN DRIVE, HEBRON, OHIO 43025 PHONE (740) 929-3532

SCALE	DRAWN	CHECKED	PROJ. ENG. APPR.	OPERATION APPR	DATE
3/16"=1'-0"	M.O'C				9/25/90

HEBRON, OHIO
RECYCLE CENTER

DRAWING NO. 90-64200-205

REV 3

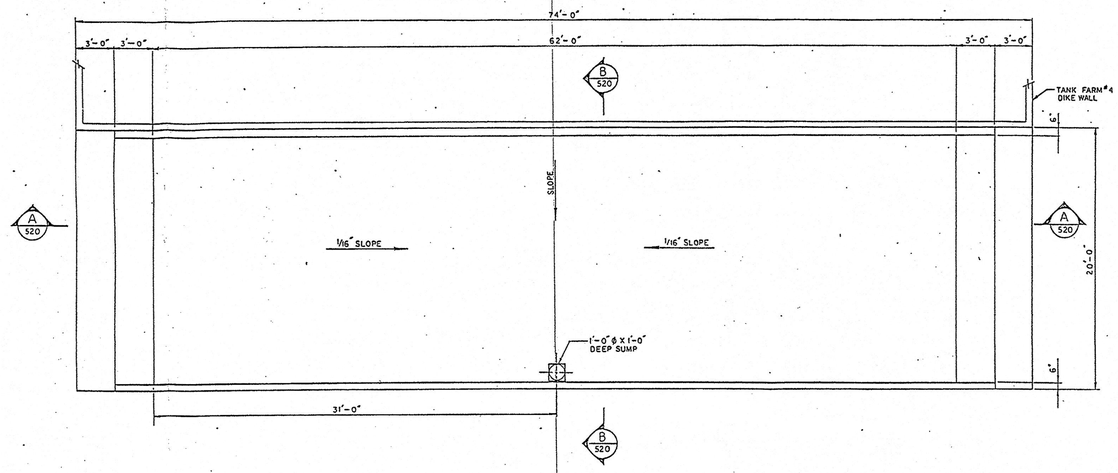

PLAN VIEW
SCALE: 1/4" = 1'-0"

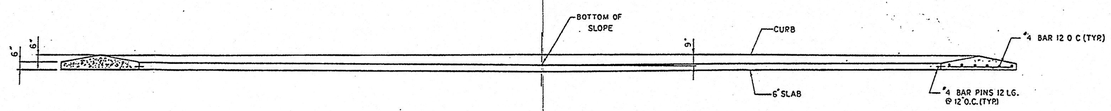

SECTION "A - A"
SCALE: 1/4" = 1'-0"

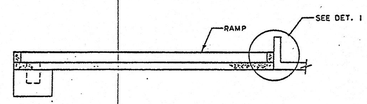

SECTION "B - B"
SCALE: 1/4" = 1'-0"

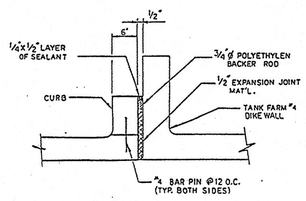

DETAIL - 1
SCALE : NONE

EXHIBIT NO. 42

RCRA PART B
PERMIT DRAWING

NO.	DESCRIPTION	BY	CHK.	APP'R.	DATE
0	FOR PART B PERMIT				7/20/99

REVISIONS

TITLE: TRUCK STATION NO. 4
CONCRETE CONSTRUCTION DRAWING

CleanHarbors
RECYCLING SERVICES of OHIO, LLC
581 Milliken Drive
Hebron, Ohio 43025

CORP.
HE 3120987-5-100
STION APP'R. | DATE

HEBRON, OHIO
RECYCLE CENTER

DRAWING NO. 90-64200-535

REV. 0

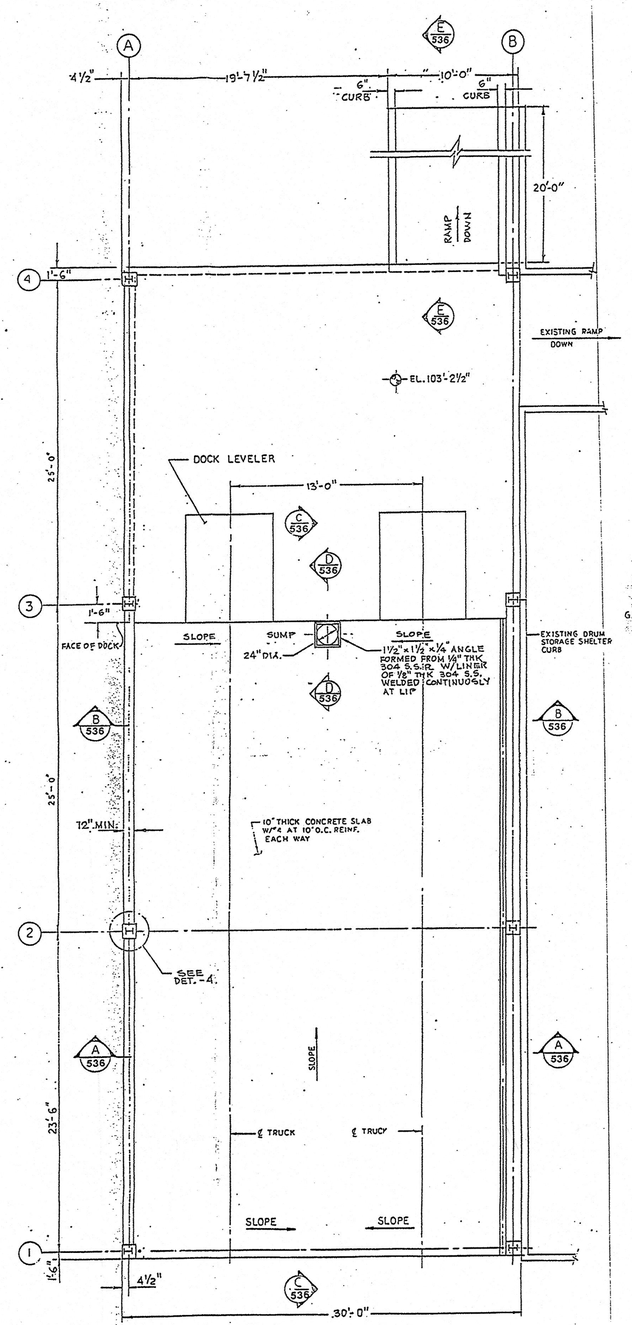

PLAN VIEW
SCALE: 1/4" = 1'-0"

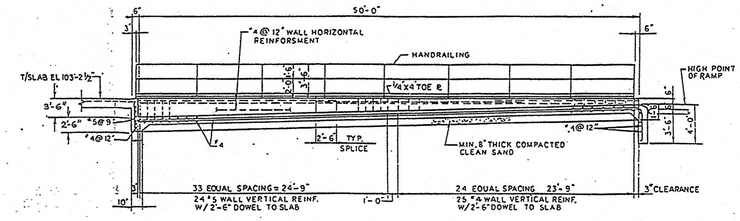

SECTION 'C-C'
SCALE: NONE

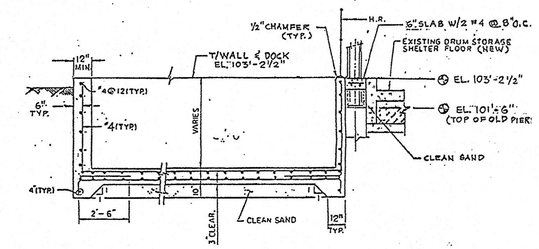

SECTION 'B-B'
SCALE: NONE

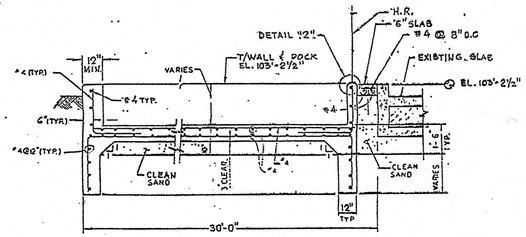

SECTION 'A-A'
SCALE: NONE

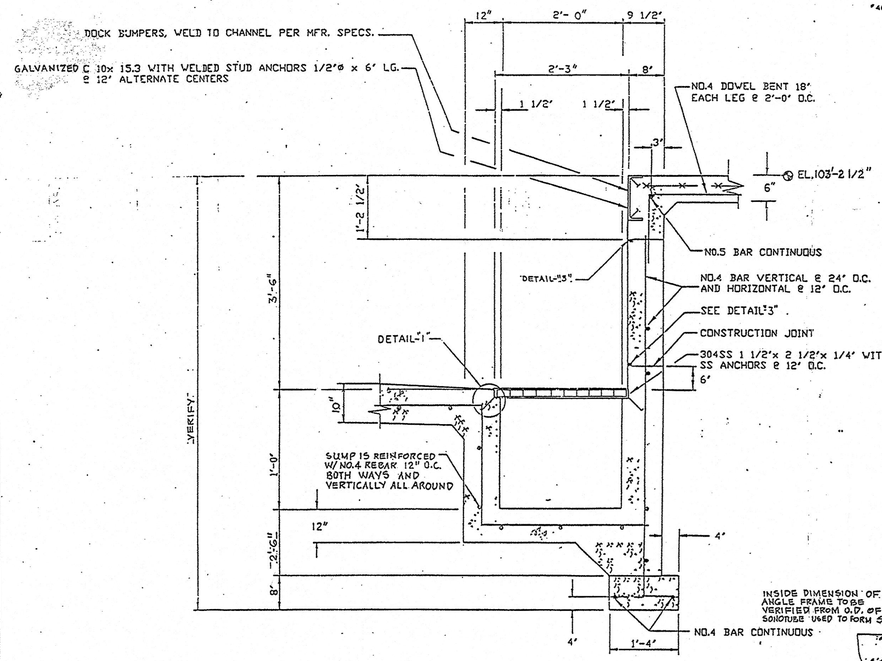

SECTION D-D
SCALE: NONE

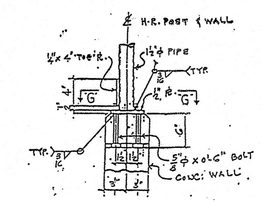

DETAIL-2
SCALE: NONE

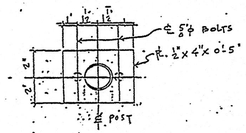

SECTION 'G-G'
SCALE: NONE

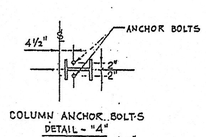

COLUMN ANCHOR BOLTS
DETAIL - "4"
SCALE: 3/4" = 1'-0"

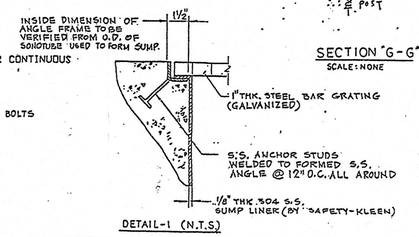

DETAIL-1 (N.T.S.)

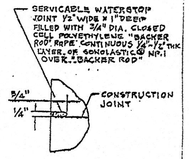

DETAIL-3 (N.T.S.)

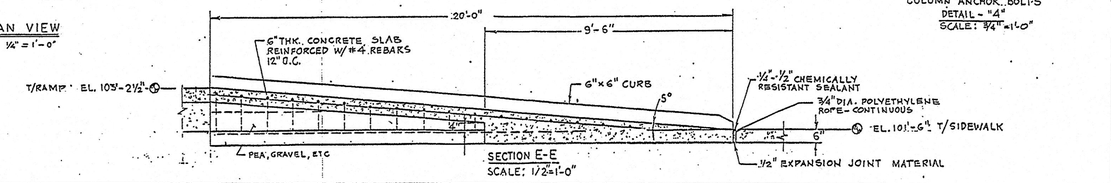

SECTION E-E
SCALE: 1/2" = 1'-0"

EXHIBIT NO. 43

NO	DESCRIPTION	BY	CHK.	APPR.	DATE
0	ISSUED FOR PART "B" PERMIT	R.K.			9/20/96

REVISIONS

TITLE: TRUCK STATION NO. 5
CONCRETE CONSTRUCTION DRAWING

CleanHarbors
RECYCLING SERVICES of OHIO, LLC
581 Milliken Drive
Hebron, Ohio 43025

[redacted] ATION APPR. DATE

HEBRON, OHIO RECYCLE CENTER

DRAWING NO: 90-64200-536
REV: 0

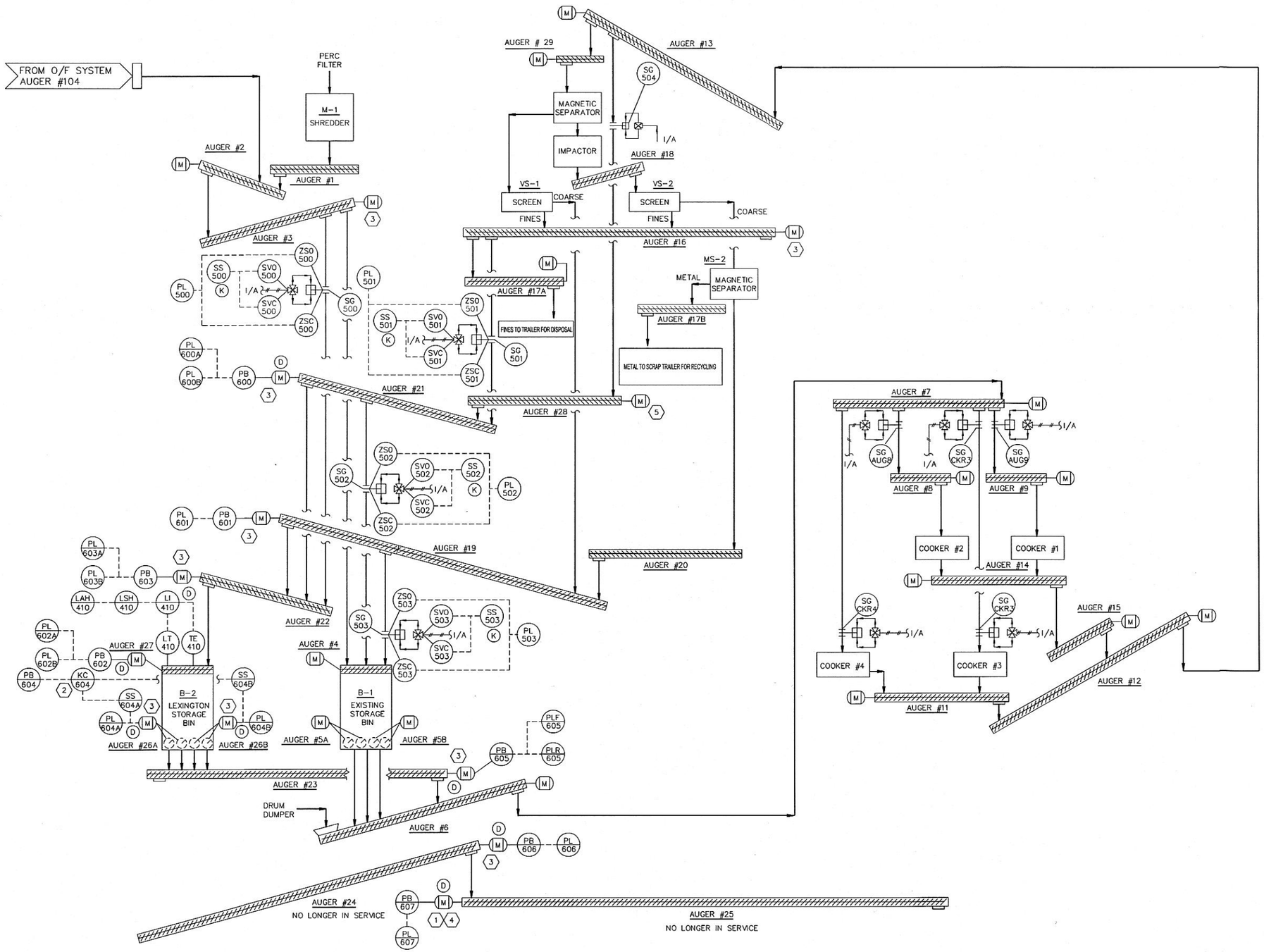

NOTES

1.
2. LEXINGTON STORAGE BIN AUGERS SHALL BE OPERATED IN AN ALTERNATING AUTO MODE WITH INDIVIDUAL SELECTABLE ON TIMES AND A COMMON OFF TIME.
3. MOTOR CONDITIONALLY INTERLOCKED TO DOWNSTREAM MOTOR.
4.

D MOTOR PROVIDED WITH FWD/OFF/REV DRUM SWITCH.
K KEY OPERATED SELECTOR SWITCH.
5. INTERLOCKED WITH AUGER #21 ONLY NOT CONDITIONALLY INTERLOCKED WITH AUGER #13

EXHIBIT NO. 45A

NO.	DESCRIPTION	BY	PROJ.MGR. APPR.	PROCESS APPR.	DATE
2	RCRA PERMIT RENEWAL UPDATE	KMC			12/12/14
1	UPDATED FOR RENEWAL PERMIT	SWL			7/26/02
0	ISSUED FOR PART B PERMIT	CEW			9/21/90

REVISIONS

PROPRIETARY STATEMENT

THIS DRAWING IS THE EXCLUSIVE PROPERTY OF CLEAN HARBORS AND IS PROPRIETARY AND CONFIDENTIAL INFORMATION. THIS DRAWING AND THE INFORMATION CONTAINED THEREIN MUST NOT BE DUPLICATED, USED, DIVULGED, REPRODUCED, COPIED, DISCLOSED OR APPROPRIATED IN WHOLE OR IN PART FOR ANY PURPOSE OTHER THAN AS EXPRESSLY AUTHORIZED BY CLEAN HARBORS. THIS DRAWING MUST BE RETURNED PROMPTLY UPON REQUEST.

FILENAME: Exhibit 45A Rev. 2

SOLIDS HANDLING SYSTEM PROCESS FLOW DIAGRAM

CleanHarbors
581 MILLIKEN DRIVE, HEBRON, OHIO 43025 PHONE (740) 929-3532

SCALE	DRAWN	CHECKED	APPR.	OPERATION APPR	DATE
NONE	MM				6/18/90

HEBRON, OHIO RECYCLE CENTER

DRAWING NO. 90-64200-118

REV 2

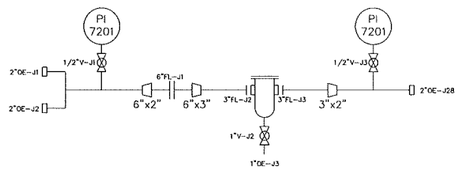

PORTABLE STRAINER
ST-7201

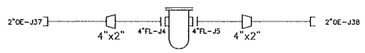

PORTABLE STRAINER
ST-7202

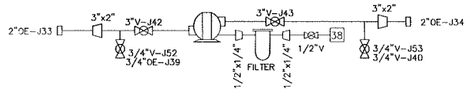

P-7203
AIR OPERATED DIAPHRAM PUMP

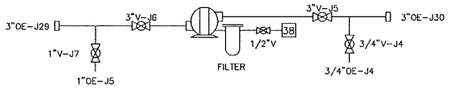

P-7201
AIR OPERATED DIAPHRAM PUMP

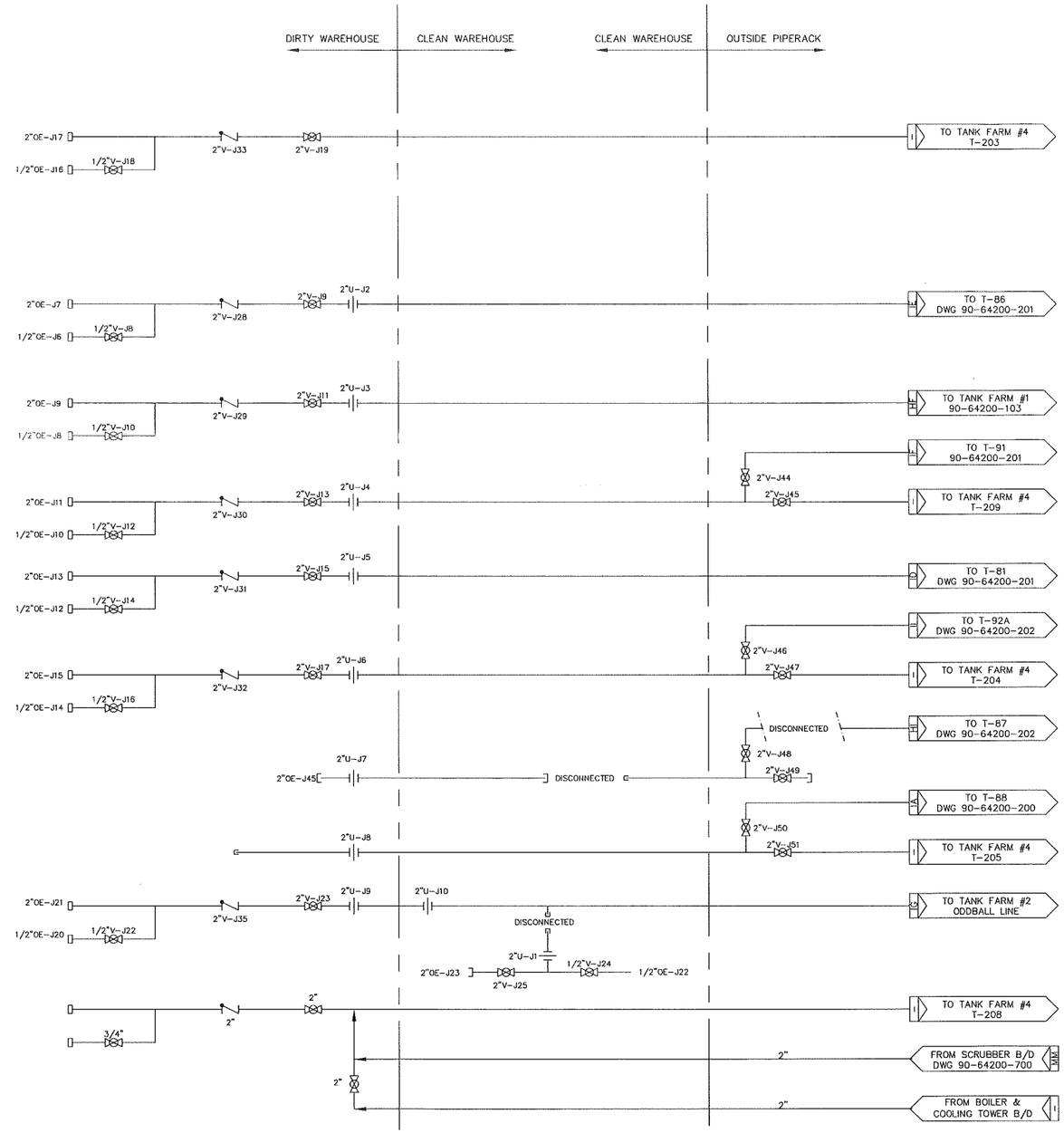

P-7201
Drum Unloading Pump #1

Wilden M15	
140 GPM	50 psig
Air Operated Diaphragm Pump	

P-7203
Drum Unloading Pump #2

Wilden M15	
140 GPM	50 psig
Air Operated Diaphragm Pump	

NOTES:

NOTE:
ALL HIGH LEVEL ALARM SIGNALS ARE INTERLOCKED WITH ALARM PANELS, OPERATOR TERMINALS AND, WHEN APPLICABLE, TO HIGH VOLUME PUMPS

LEGEND

LAH - LEVEL ALARM HIGH
VS - STEEL VALVE
VB - BRONZE VALVE
PI - PRESSURE INDICATOR
EJ - EXPANSION JOINT

DF=Exhibit 45B Rev. 1

EXHIBIT NO. 45B

NO.	DESCRIPTION	BY	P MGR APPR	PROC APPR	DATE
1	RCRA PERMIT RENEWAL UPDATE	KMC			12/12/14
0	ISSUED FOR RENEWAL PERMIT	SWL			7/26/02

REVISIONS

PROPRIETARY STATEMENT

THIS DRAWING IS THE EXCLUSIVE PROPERTY OF CLEAN HARBORS AND IS PROPRIETARY AND CONFIDENTIAL INFORMATION. THIS DRAWING AND THE INFORMATION CONTAINED THEREIN MUST NOT BE DUPLICATED, USED, DIVULGED, REPRODUCED, COPIED, DISCLOSED OR APPROPRIATED IN WHOLE OR IN PART FOR ANY PURPOSE OTHER THAN AS EXPRESSLY AUTHORIZED BY CLEAN HARBORS. THIS DRAWING MUST BE RETURNED PROMPTLY UPON REQUEST.

TITLE

FRS DRUM HANDLING SYSTEM
PROCESS FLOW DIAGRAM

11	COOLING WATER SUPPLY	15	STEAM CONDENSATE RETURN	21	NITROGEN
12	COOLING WATER RETURN	16	INSTRUMENT AIR	22	BLOWDOWN/FLARE
13	STEAM SUPPLY	19	NATURAL GAS	24	PLANT WATER

27	VENT TO ATMOSPHERE	35	TREATED BFW	38	PLANT AIR
31	WATER SEWER	36	SEAL OIL SUPPLY		
32	DISCHARGE TO GRADE	37	SEAL OIL RETURN		

CleanHarbors
581 MILLIKEN DRIVE, HEBRON, OHIO 43025 PHONE (740) 929-3532

SCALE	BY	CHKD	APPROVED	OPERATIONS	DATE
NONE	SWL				7/26/02

HEBRON, OHIO
RECYCLE CENTER

DRAWING NUMBER 90-64200-700

REV. NO. 1

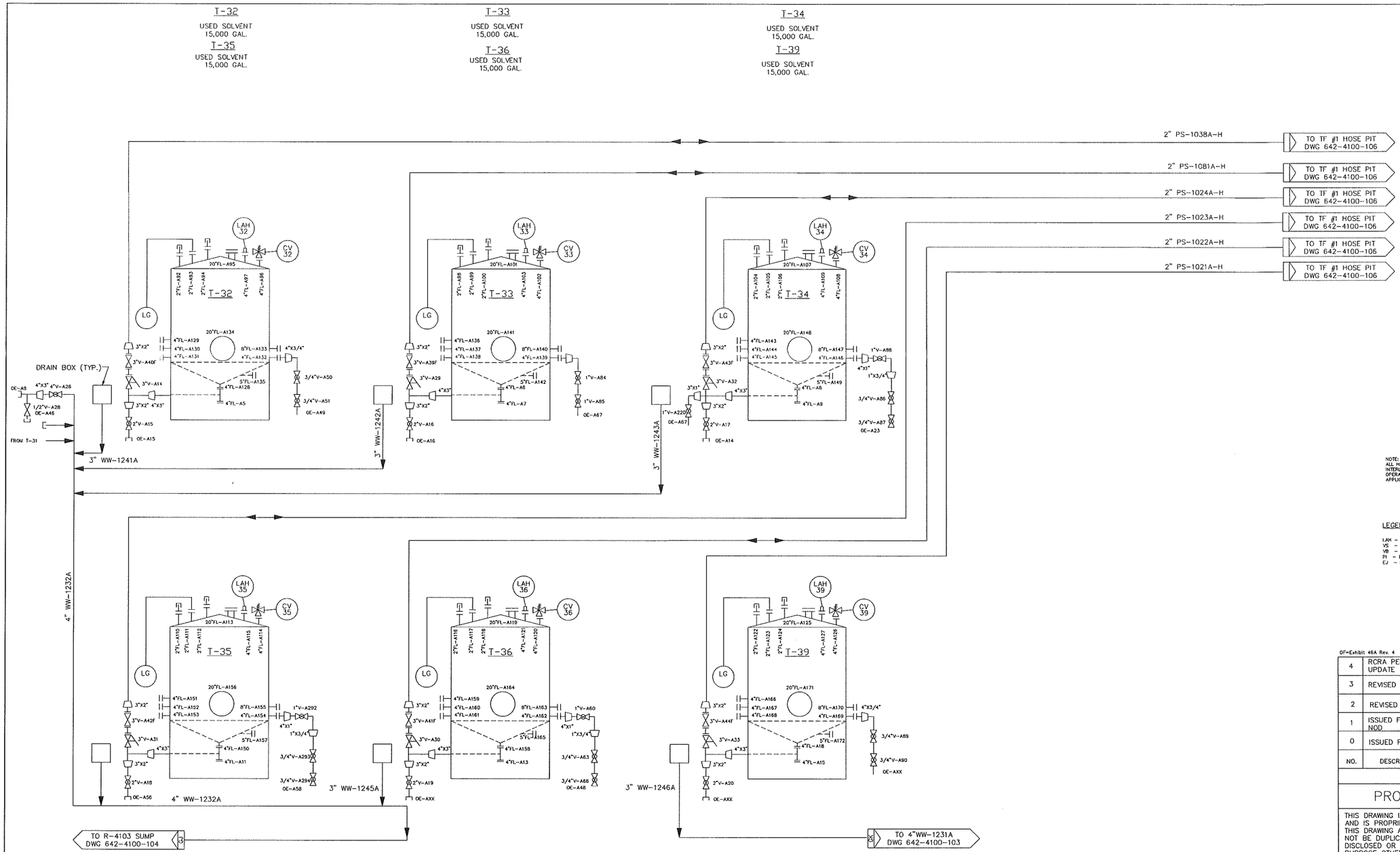

NOTE:
ALL HIGH LEVEL ALARM SIGNALS ARE INTERLOCKED WITH ALARM PANELS, OPERATOR TERMINALS AND, WHEN APPLICABLE, TO HIGH VOLUME PUMPS

LEGEND

LAH - LEVEL ALARM HIGH
VS - STEEL VALVE
VB - BRONZE VALVE
PI - PRESSURE INDICATOR
EJ - EXPANSION JOINT

07-Exhibit 46A Rev. 4

EXHIBIT NO. 46A

NO.	DESCRIPTION	BY	P MGR APPR	PROC APPR	DATE
4	RCRA PERMIT RENEWAL UPDATE	KMC			12/12/14
3	REVISED FOR PERMIT RENEWAL	SWL			7/16/02
2	REVISED PER NOD 1994	MBH			10/17/94
1	ISSUED FOR PART "B" PERMIT NOD	RDK			3/3/92
0	ISSUED FOR PART "B" PERMIT	SPM			9/19/90

REVISIONS

PROPRIETARY STATEMENT

THIS DRAWING IS THE EXCLUSIVE PROPERTY OF CLEAN HARBORS AND IS PROPRIETARY AND CONFIDENTIAL INFORMATION. THIS DRAWING AND THE INFORMATION CONTAINED THEREIN MUST NOT BE DUPLICATED, USED, DIVULGED, REPRODUCED, COPIED, DISCLOSED OR APPROPRIATED IN WHOLE OR IN PART FOR ANY PURPOSE OTHER THAN AS EXPRESSLY AUTHORIZED BY CLEAN HARBORS. THIS DRAWING MUST BE RETURNED PROMPTLY UPON REQUEST.

TITLE

TANK FARM NO. 1
USED SOLVENTS
PROCESS FLOW DIAGRAM
Sheet 1 of 2

CleanHarbors

581 MILLIKEN DRIVE, HEBRON, OHIO 43025 PHONE (740) 929-3532

SCALE	BY	CHKD	APPROVED	OPERATIONS	DATE
NONE	SPM			TS	1/2/86

HEBRON, OHIO RECYCLE CENTER	DRAWING NUMBER	REV. NO.
	90-64200-102	4

11 COOLING WATER SUPPLY	15 STEAM CONDENSATE RETURN	21 NITROGEN	27 VENT TO ATMOSPHERE	35 TREATED BFW	38 PLANT AIR
12 COOLING WATER RETURN	16 INSTRUMENT AIR	22 BLOWDOWN/FLARE	31 WATER SEWER	36 SEAL OIL SUPPLY	
13 STEAM SUPPLY	19 NATURAL GAS	24 PLANT WATER	32 DISCHARGE TO GRADE	37 SEAL OIL RETURN	

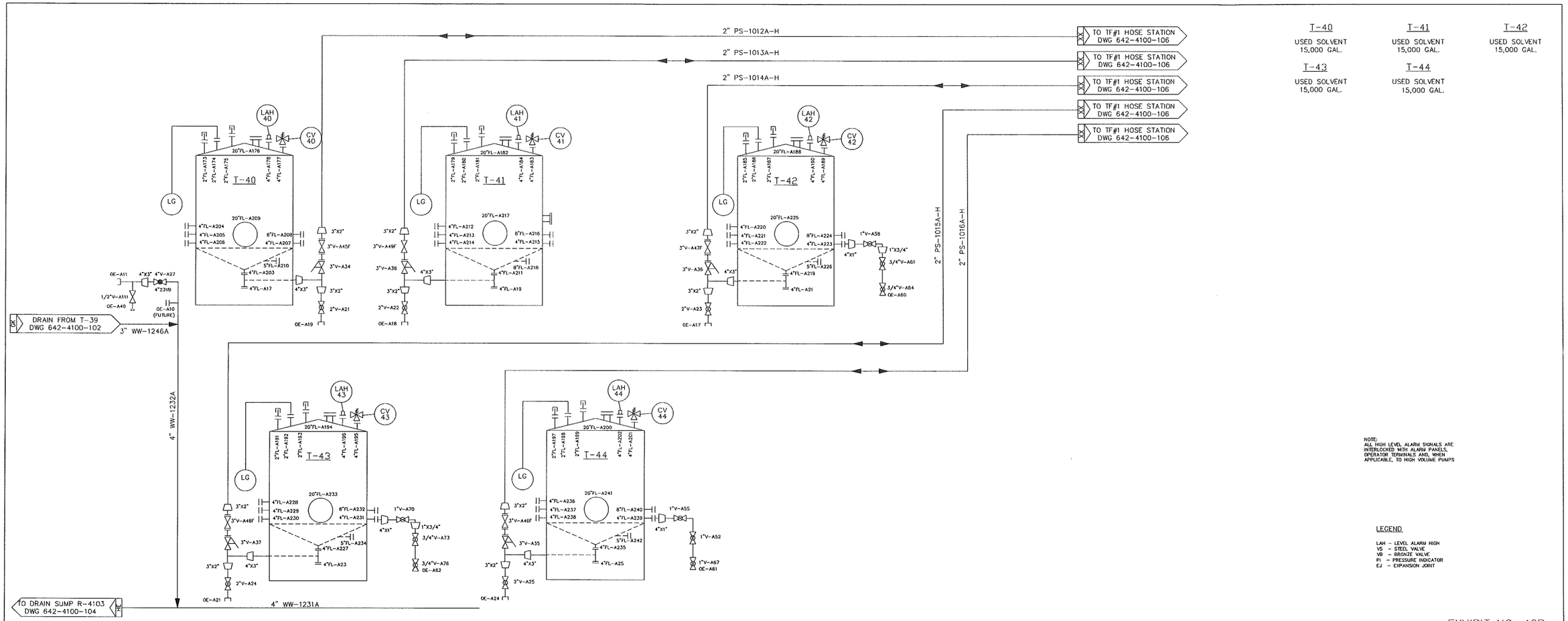

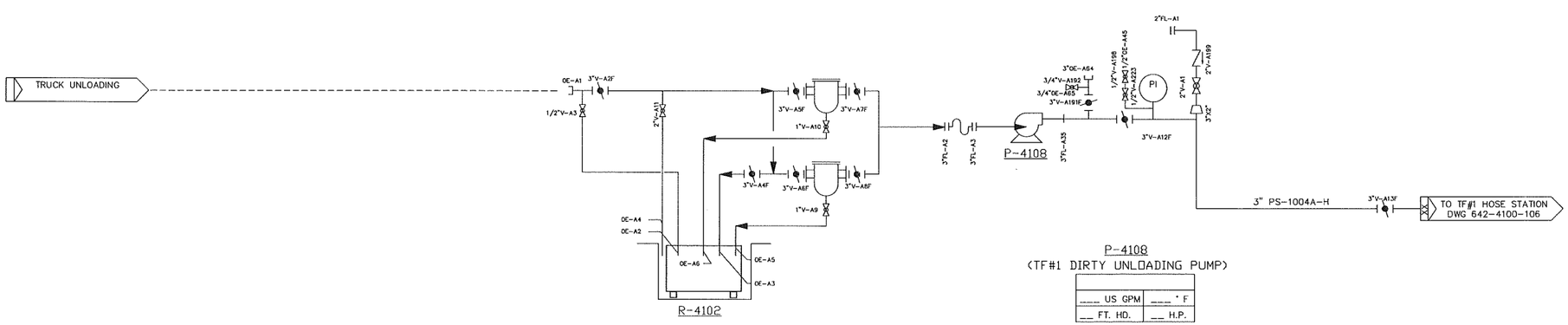

DF=Exhibit 46B Rev. 4

EXHIBIT NO. 46B

NO.	DESCRIPTION	BY	P MGR APPR	PROC APPR	DATE
4	RCRA PERMIT RENEWAL UPDATE	KMC			12/12/14
3	REVISED FOR PERMIT RENEWAL	SWL			7/16/02
2	REVISED PER NOD 1994	MBH			10/17/94
1	ISSUED FOR PART "B" PERMIT NOD	RDK			3/3/92
0	ISSUED FOR PART "B" PERMIT	SPM			9/19/90

REVISIONS

PROPRIETARY STATEMENT

THIS DRAWING IS THE EXCLUSIVE PROPERTY OF CLEAN HARBORS AND IS PROPRIETARY AND CONFIDENTIAL INFORMATION. THIS DRAWING AND THE INFORMATION CONTAINED THEREIN MUST NOT BE DUPLICATED, USED, DIVULGED, REPRODUCED, COPIED, DISCLOSED OR APPROPRIATED IN WHOLE OR IN PART FOR ANY PURPOSE OTHER THAN AS EXPRESSLY AUTHORIZED BY CLEAN HARBORS. THIS DRAWING MUST BE RETURNED PROMPTLY UPON REQUEST.

TITLE

TANK FARM NO. 1
USED SOLVENTS
PROCESS FLOW DIAGRAM
Sheet 2 of 2

CleanHarbors

581 MILLIKEN DRIVE, HEBRON, OHIO 43025 PHONE (740) 929-3532

SCALE	BY	CHKD	APPROVED	OPERATIONS	DATE
NONE	SPM			TS	1/2/86

HEBRON, OHIO RECYCLE CENTER

DRAWING NUMBER 90-64200-103

REV. NO. 4

11	COOLING WATER SUPPLY	15	STEAM CONDENSATE RETURN	21	NITROGEN
12	COOLING WATER RETURN	16	INSTRUMENT AIR	22	BLOWDOWN/FLARE
13	STEAM SUPPLY	19	NATURAL GAS	24	PLANT WATER

27	VENT TO ATMOSPHERE	35	TREATED BFW	38	PLANT AIR
31	WATER SEWER	36	SEAL OIL SUPPLY		
32	DISCHARGE TO GRADE	37	SEAL OIL RETURN		

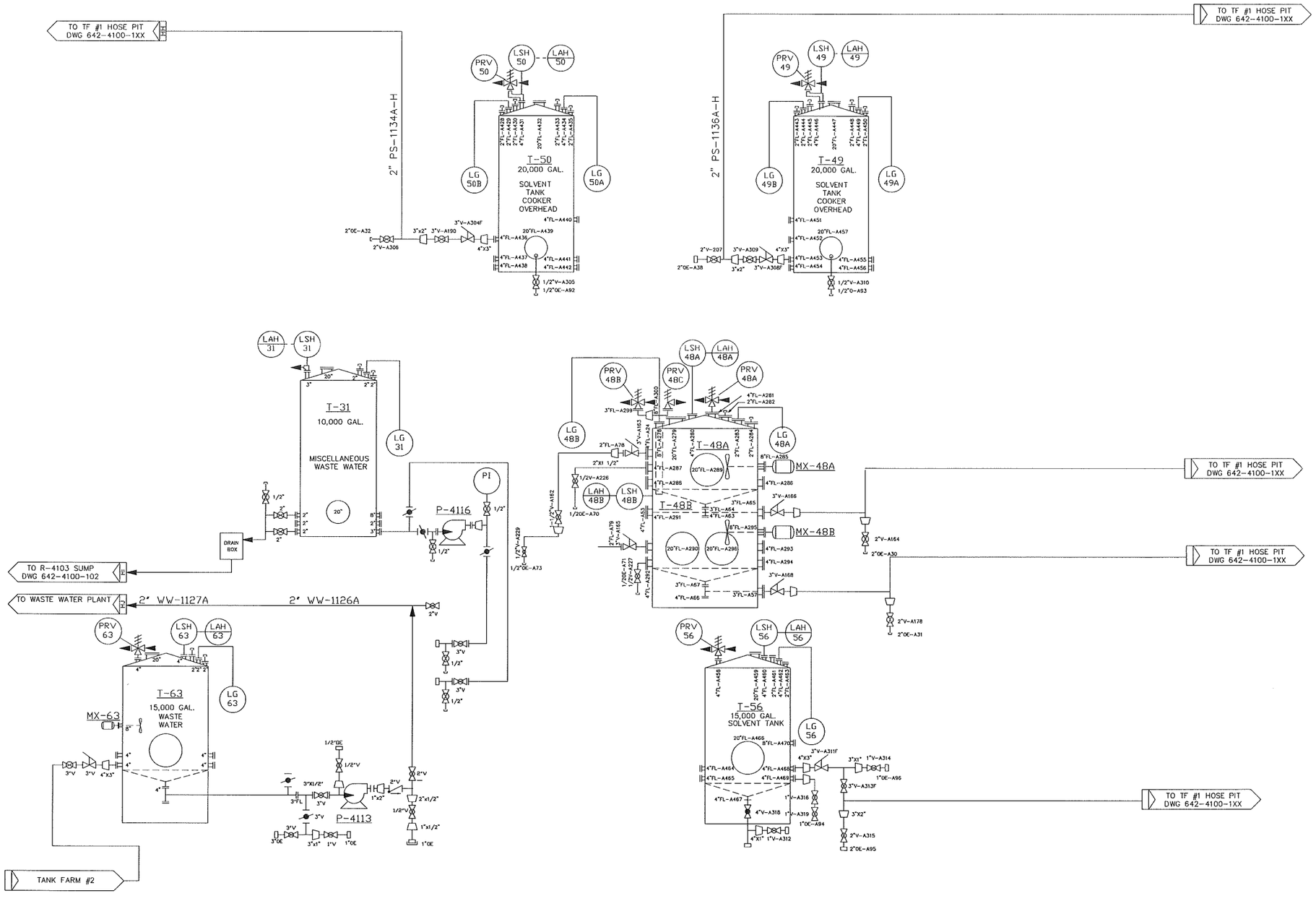

___ US GPM	___ ° F
__ FT. HD.	__ H.P.

___ US GPM	___ ° F
__ FT. HD.	__ H.P.

VENDOR	
___ US GPM	___ ° F
__ FT. HD.	__ H.P.

NOTE:
ALL HIGH LEVEL ALARM SIGNALS ARE INTERLOCKED WITH ALARM PANELS, OPERATOR TERMINALS AND, WHEN APPLICABLE, TO HIGH VOLUME PUMPS

LEGEND

LAH – LEVEL ALARM HIGH
VS – STEEL VALVE
VB – BRONZE VALVE
PI – PRESSURE INDICATOR
EJ – EXPANSION JOINT

DF=Exhibit 46C Rev. 4

EXHIBIT NO. 46C

NO.	DESCRIPTION	BY	P MGR APPR	PROC APPR	DATE
4	RCRA PERMIT RENEWAL UPDATE	KMC			12/12/14
3	UPDATED FOR RENEWAL PERMIT	SWL			7/16/02
2	ADDED P-4113 AND PROCESS LINES	MCO			1/22/97
1	ISSUED FOR PART "B" PERMIT NOD	RDK			3/5/92
0	ISSUED FOR PART "B" PERMIT	SPM			9/19/90

REVISIONS

PROPRIETARY STATEMENT

THIS DRAWING IS THE EXCLUSIVE PROPERTY OF CLEAN HARBORS AND IS PROPRIETARY AND CONFIDENTIAL INFORMATION. THIS DRAWING AND THE INFORMATION CONTAINED THEREIN MUST NOT BE DUPLICATED, USED, DIVULGED, REPRODUCED, COPIED, DISCLOSED OR APPROPRIATED IN WHOLE OR IN PART FOR ANY PURPOSE OTHER THAN AS EXPRESSLY AUTHORIZED BY CLEAN HARBORS. THIS DRAWING MUST BE RETURNED PROMPTLY UPON REQUEST.

TITLE

TANK FARM NO. 1
MISC. FUNCTION
PROCESS FLOW DIAGRAM
Sheet 1 of 2

CleanHarbors
581 MILLIKEN DRIVE, HEBRON, OHIO 43025 PHONE (740) 929-3532

SCALE	BY	CHKD	APPROVED	OPERATIONS	DATE
NONE	NLJ				2/12/86

HEBRON, OHIO RECYCLE CENTER	DRAWING NUMBER 90-64200-105	REV. NO. 4

11 COOLING WATER SUPPLY	15 STEAM CONDENSATE RETURN	21 NITROGEN	27 VENT TO ATMOSPHERE	35 TREATED BFW	38 PLANT AIR
12 COOLING WATER RETURN	16 INSTRUMENT AIR	22 BLOWDOWN/FLARE	31 WATER SEWER	36 SEAL OIL SUPPLY	
13 STEAM SUPPLY	19 NATURAL GAS	24 PLANT WATER	32 DISCHARGE TO GRADE	37 SEAL OIL RETURN	

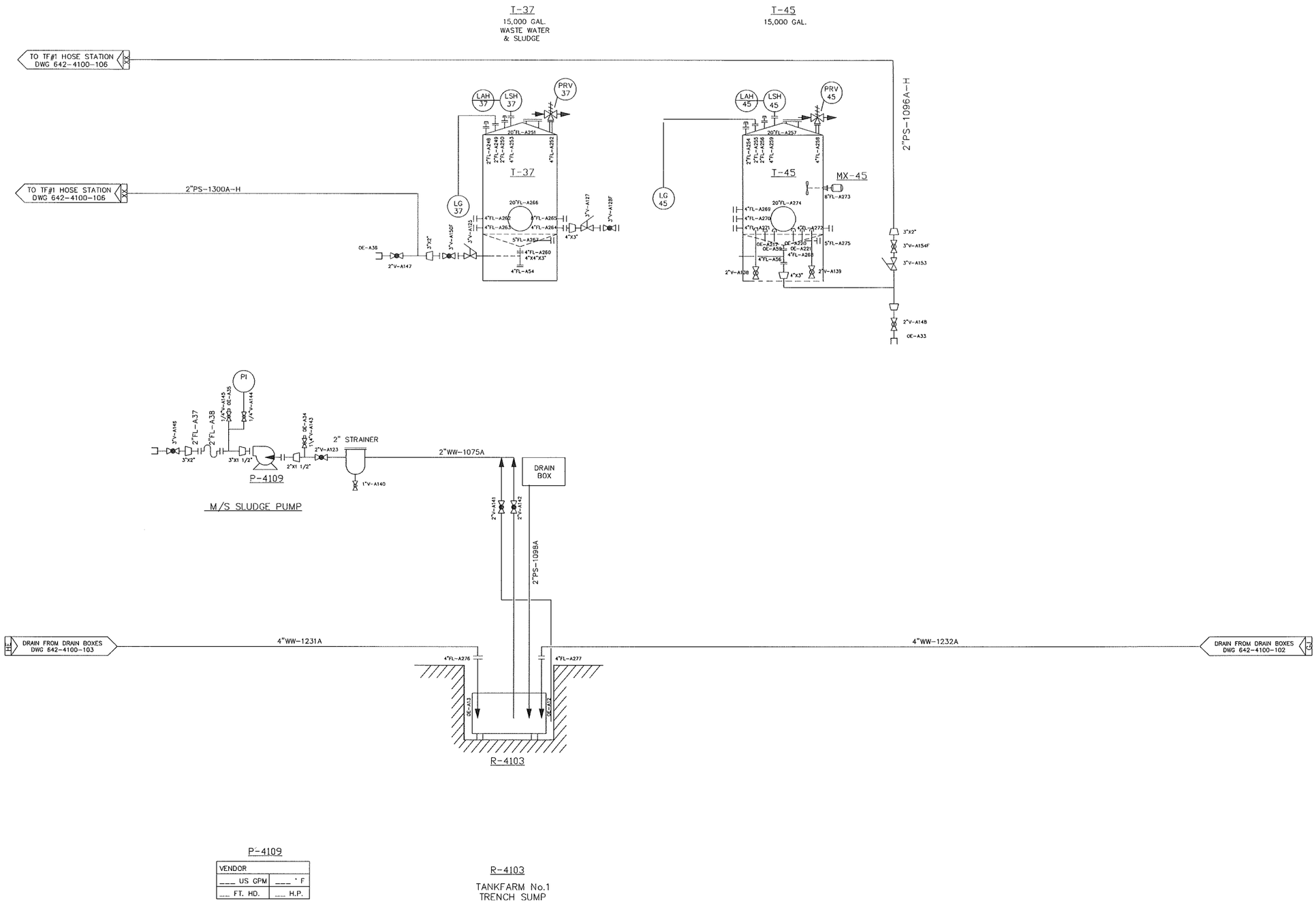

NOTE:
ALL HIGH LEVEL ALARM SIGNALS ARE INTERLOCKED WITH ALARM PANELS. OPERATOR TERMINALS AND, WHEN APPLICABLE, TO HIGH VOLUME PUMPS

LEGEND

LAH - LEVEL ALARM HIGH
VS - STEEL VALVE
VB - BRONZE VALVE
PI - PRESSURE INDICATOR
EJ - EXPANSION JOINT

P-4109

VENDOR	
___ US GPM	___ °F
___ FT. HD.	___ H.P.

R-4103

TANKFARM No.1
TRENCH SUMP

11	COOLING WATER SUPPLY	15	STEAM CONDENSATE RETURN
12	COOLING WATER RETURN	16	INSTRUMENT AIR
13	STEAM SUPPLY	19	NATURAL GAS
21	NITROGEN	27	VENT TO ATMOSPHERE
22	BLOWDOWN/FLARE	31	WATER SEWER
24	PLANT WATER	32	DISCHARGE TO GRADE
35	TREATED BFW	38	PLANT AIR
36	SEAL OIL SUPPLY		
37	SEAL OIL RETURN		

DF=Exhibit 46D Rev. 3

EXHIBIT NO. 46D

NO.	DESCRIPTION	BY	P MGR APPR	PROC APPR	DATE
3	RCRA PERMIT RENEWAL UPDATE	KMC			12/12/14
2	UPDATED FOR RENEWAL PERMIT	SWL			7/18/02
1	ISSUED FOR PART "B" PERMIT NOD	RDK			3/5/92
0	ISSUED FOR PART "B" PERMIT	SPM			9/19/90

REVISIONS

PROPRIETARY STATEMENT

THIS DRAWING IS THE EXCLUSIVE PROPERTY OF CLEAN HARBORS AND IS PROPRIETARY AND CONFIDENTIAL INFORMATION. THIS DRAWING AND THE INFORMATION CONTAINED THEREIN MUST NOT BE DUPLICATED, USED, DIVULGED, REPRODUCED, COPIED, DISCLOSED OR APPROPRIATED IN WHOLE OR IN PART FOR ANY PURPOSE OTHER THAN AS EXPRESSLY AUTHORIZED BY CLEAN HARBORS. THIS DRAWING MUST BE RETURNED PROMPTLY UPON REQUEST.

TITLE

TANK FARM NO. 1
MISC. FUNCTION
PROCESS FLOW DIAGRAM
Sheet 2 of 2

CleanHarbors
581 MILLIKEN DRIVE, HEBRON, OHIO 43025 PHONE (740) 929-3532

SCALE	BY	CHKD	APPROVED	OPERATIONS	DATE
NONE	NLJ				2/12/86

HEBRON, OHIO RECYCLE CENTER	DRAWING NUMBER	REV. NO.
	90-64200-104	3

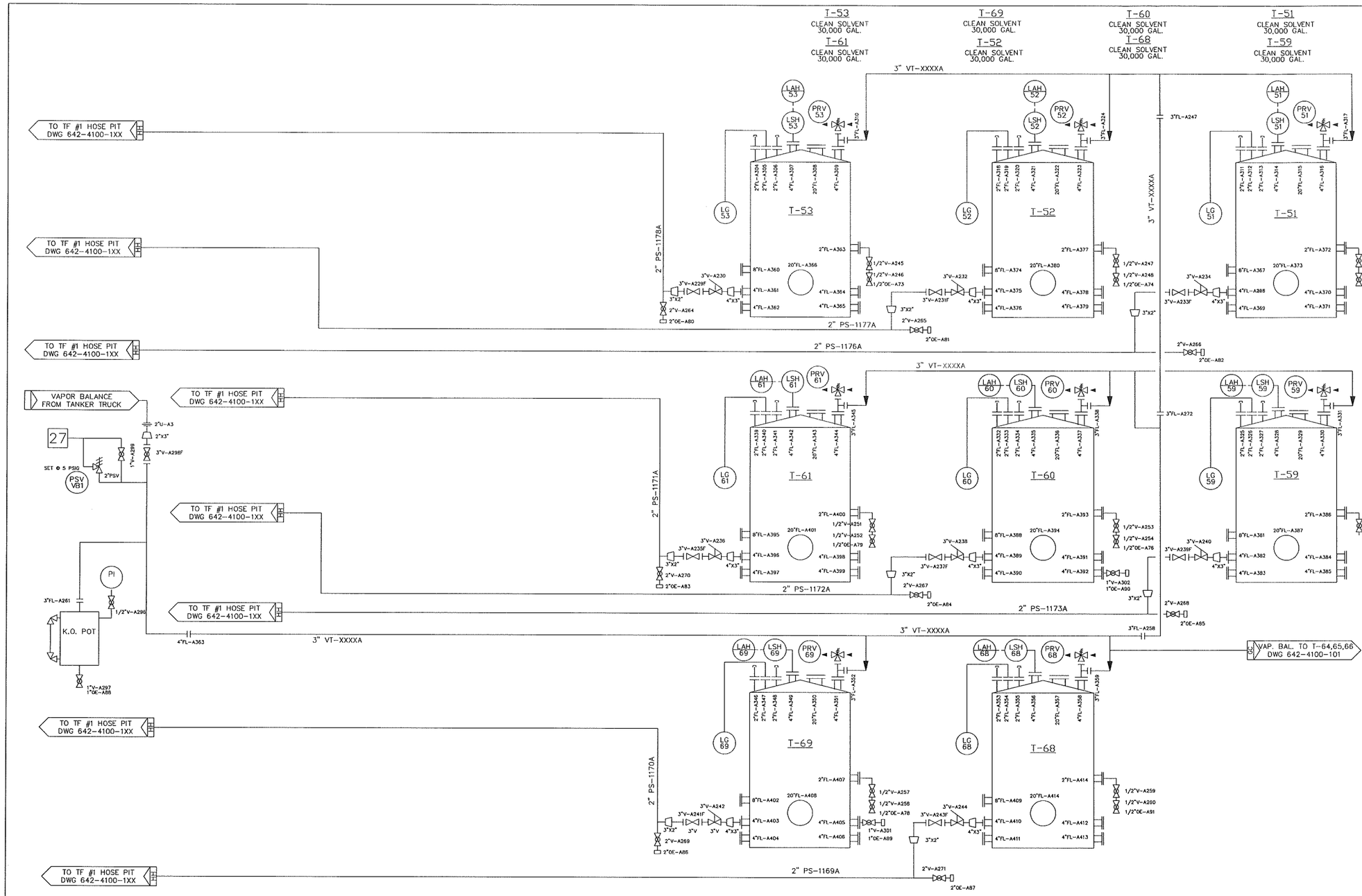

NOTE:
ALL HIGH LEVEL ALARM SIGNALS ARE INTERLOCKED WITH ALARM PANELS, OPERATOR TERMINALS AND, WHEN APPLICABLE, TO HIGH VOLUME PUMPS

LEGEND

LAH – LEVEL ALARM HIGH
VS – STEEL VALVE
VB – BRONZE VALVE
PI – PRESSURE INDICATOR
EJ – EXPANSION JOINT

1/2"V-A255
1/2"OE-A77

DF=Exhibit 46E Rev. 3

EXHIBIT NO. 46E

NO.	DESCRIPTION	BY	P MGR APPR	PROC APPR	DATE
3	RCRA PERMIT RENEWAL UPDATE	KMC			12/12/14
2	UPDATED FOR RENEWAL PERMIT	SWL			7/19/02
1	ISSUED FOR PART "B" PERMIT NOD	RDK			3/5/92
0	ISSUED FOR PART "B" PERMIT	SPM			9/19/90

REVISIONS

PROPRIETARY STATEMENT

THIS DRAWING IS THE EXCLUSIVE PROPERTY OF CLEAN HARBORS AND IS PROPRIETARY AND CONFIDENTIAL INFORMATION. THIS DRAWING AND THE INFORMATION CONTAINED THEREIN MUST NOT BE DUPLICATED, USED, DIVULGED, REPRODUCED, COPIED, DISCLOSED OR APPROPRIATED IN WHOLE OR IN PART FOR ANY PURPOSE OTHER THAN AS EXPRESSLY AUTHORIZED BY CLEAN HARBORS. THIS DRAWING MUST BE RETURNED PROMPTLY UPON REQUEST.

TITLE

TANK FARM NO. 1
CLEAN SOLVENT
PROCESS FLOW DIAGRAM
Sheet 1 of 2

11	COOLING WATER SUPPLY	15	STEAM CONDENSATE RETURN	21	NITROGEN	27	VENT TO ATMOSPHERE	35	TREATED BFW	38	PLANT AIR
12	COOLING WATER RETURN	16	INSTRUMENT AIR	22	BLOWDOWN/FLARE	31	WATER SEWER	36	SEAL OIL SUPPLY		
13	STEAM SUPPLY	19	NATURAL GAS	24	PLANT WATER	32	DISCHARGE TO GRADE	37	SEAL OIL RETURN		

CleanHarbors
581 MILLIKEN DRIVE, HEBRON, OHIO 43025 PHONE (740) 929-3532

SCALE	BY	CHKD	APPROVED	OPERATIONS	DATE
NONE	NLJ				2/12/86

HEBRON, OHIO RECYCLE CENTER	DRAWING NUMBER 90-64200-100	REV. NO. 3

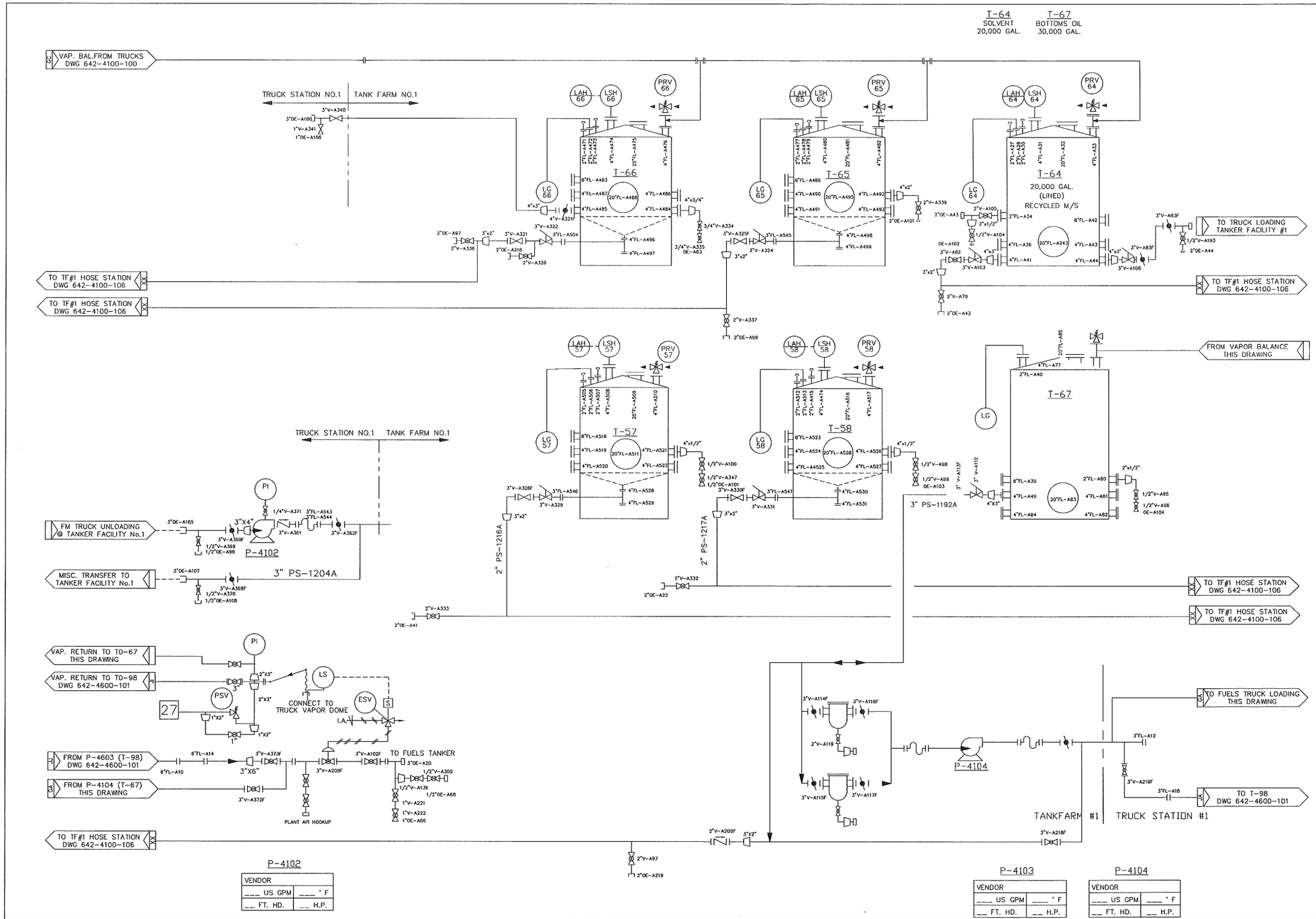

NOTE:
ALL HIGH LEVEL ALARM SIGNALS ARE INTERLOCKED WITH ALARM PANELS, OPERATOR TERMINALS AND, WHEN APPLICABLE, TO HIGH VOLUME PUMPS

LEGEND

LAH - LEVEL ALARM HIGH
VS - STEEL VALVE
VB - BRONZE VALVE
PI - PRESSURE INDICATOR
EJ - EXPANSION JOINT

P-4102

VENDOR	
___ US GPM	___ ° F
__ FT. HD.	__ H.P.

P-4103

VENDOR	
___ US GPM	___ ° F
__ FT. HD.	__ H.P.

P-4104

VENDOR	
___ US GPM	___ ° F
__ FT. HD.	__ H.P.

11	COOLING WATER SUPPLY	15	STEAM CONDENSATE RETURN
12	COOLING WATER RETURN	16	INSTRUMENT AIR
13	STEAM SUPPLY	19	NATURAL GAS
21	NITROGEN	27	VENT TO ATMOSPHERE
22	BLOWDOWN/FLARE	31	WATER SEWER
24	PLANT WATER	32	DISCHARGE TO GRADE
35	TREATED BFW	38	PLANT AIR
36	SEAL OIL SUPPLY		
37	SEAL OIL RETURN		

DF=Exhibit 46F Rev. 3

EXHIBIT NO. 46F

NO.	DESCRIPTION	BY	P MGR APPR	PROC APPR	DATE
3	RCRA PERMIT RENEWAL UPDATE	KMC			12/12/14
2	UPDATED FOR RENEWAL PERMIT	SWL			7/19/02
1	ISSUED FOR PART "B" PERMIT MOD	RDK			3/5/92
0	ISSUED FOR PART "B" PERMIT	SPM			9/19/90

REVISIONS

PROPRIETARY STATEMENT

THIS DRAWING IS THE EXCLUSIVE PROPERTY OF CLEAN HARBORS AND IS PROPRIETARY AND CONFIDENTIAL INFORMATION. THIS DRAWING AND THE INFORMATION CONTAINED THEREIN MUST NOT BE DUPLICATED, USED, DIVULGED, REPRODUCED, COPIED, DISCLOSED OR APPROPRIATED IN WHOLE OR IN PART FOR ANY PURPOSE OTHER THAN AS EXPRESSLY AUTHORIZED BY CLEAN HARBORS. THIS DRAWING MUST BE RETURNED PROMPTLY UPON REQUEST.

TITLE

TANK FARM NO. 1
CLEAN SOLVENT
PROCESS FLOW DIAGRAM
Sheet 2 of 2

CleanHarbors
581 MILLIKEN DRIVE, HEBRON, OHIO 43025 PHONE (740) 929-3532

SCALE	BY	CHKD	APPROVED	OPERATIONS	DATE
NONE	NLJ				2/12/86

HEBRON, OHIO RECYCLE CENTER	DRAWING NUMBER 90-64200-101	REV. NO. 3

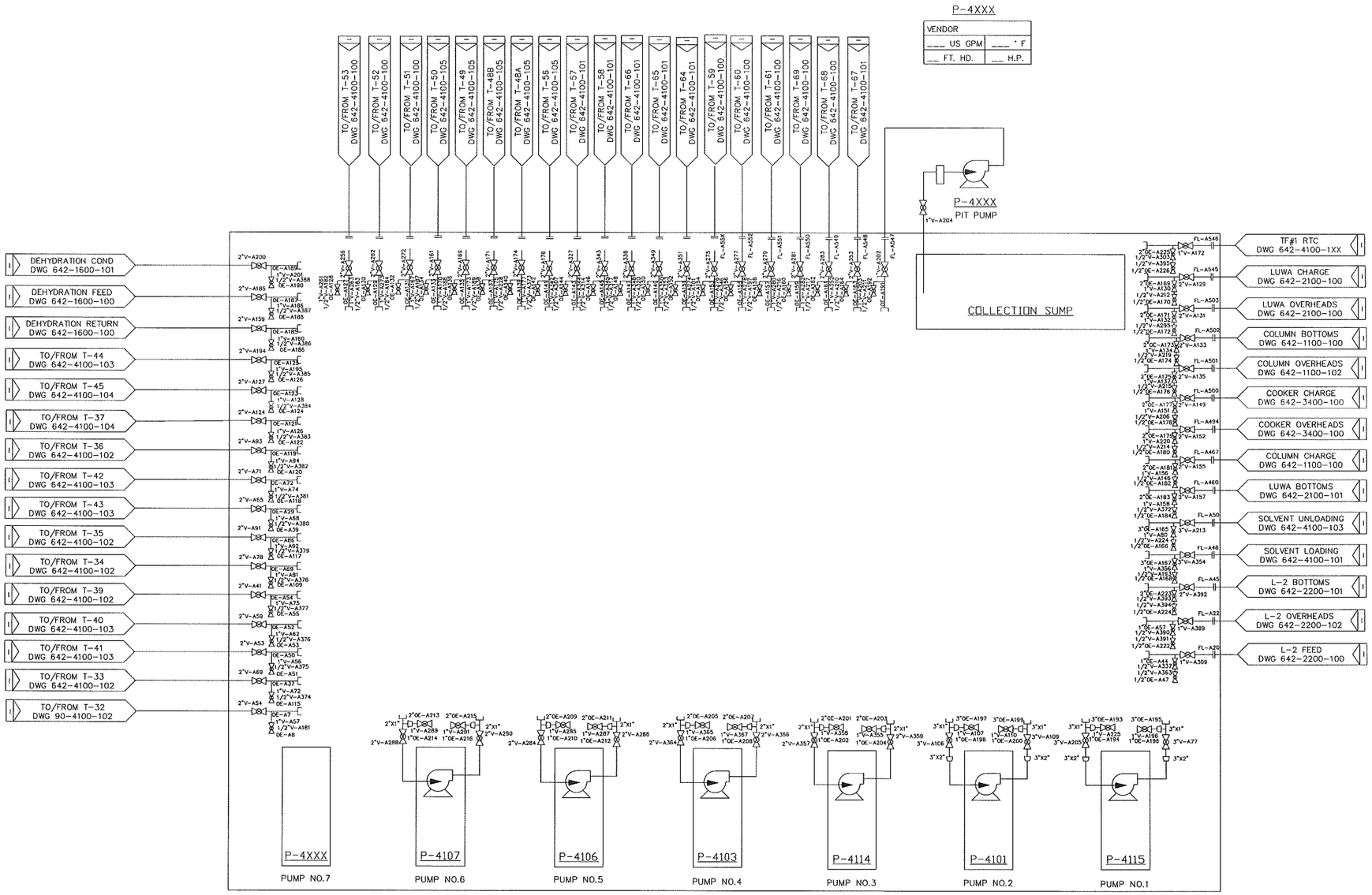

P-4XXX	P-4107	P-4106	P-4103	P-4114	P-4101	P-4115
VENDOR	VENDOR	VENDOR	VENDOR	VENDOR	VENDOR	VENDOR
___ US GPM ___ °F	___ US GPM ___ °F	___ US GPM ___ °F	___ US GPM ___ °F	___ US GPM ___ °F	___ US GPM ___ °F	___ US GPM ___ °F
__ FT. HD. __ H.P.	__ FT. HD. __ H.P.	__ FT. HD. __ H.P.	__ FT. HD. __ H.P.	__ FT. HD. __ H.P.	__ FT. HD. __ H.P.	__ FT. HD. __ H.P.

11 COOLING WATER SUPPLY	15 STEAM CONDENSATE RETURN	21 NITROGEN	27 VENT TO ATMOSPHERE	35 TREATED BFW	38 PLANT AIR
12 COOLING WATER RETURN	16 INSTRUMENT AIR	22 BLOWDOWN/FLARE	31 WATER SEWER	36 SEAL OIL SUPPLY	
13 STEAM SUPPLY	19 NATURAL GAS	24 PLANT WATER	32 DISCHARGE TO GRADE	37 SEAL OIL RETURN	

DF=Exhibit 46G Rev. 0

EXHIBIT NO. 46G

NO.	DESCRIPTION	BY / CHK	P MGR APPR	PROC APPR	DATE
0	RCRA PERMIT RENEWAL UPDATE	KMC			12/12/14

REVISIONS

PROPRIETARY STATEMENT

THIS DRAWING IS THE EXCLUSIVE PROPERTY OF CLEAN HARBORS INC. AND IS PROPRIETARY AND CONFIDENTIAL INFORMATION. THIS DRAWING AND THE INFORMATION CONTAINED THEREIN MUST NOT BE DUPLICATED, USED, DIVULGED, REPRODUCED, COPIED, DISCLOSED OR APPROPRIATED IN WHOLE OR IN PART FOR ANY PURPOSE OTHER THAN AS EXPRESSLY AUTHORIZED BY CLEAN HARBORS. THIS DRAWING MUST BE RETURNED PROMPTLY UPON REQUEST.

TITLE

TANK FARM NO. 1 HOSE STATION PROCESS FLOW DIAGRAM

CleanHarbors
581 MILLIKEN DRIVE, HEBRON, OHIO 43025 PHONE (740) 929-3532

SCALE	BY	CHKD	APPROVED	OPERATIONS	DATE
NONE	SL	KJM			12/2/14

RECYCLE CENTER LOCATION	DRAWING NUMBER	REV. NO.
HEBRON, OHIO RECYCLE CENTER	90-64200-106	0

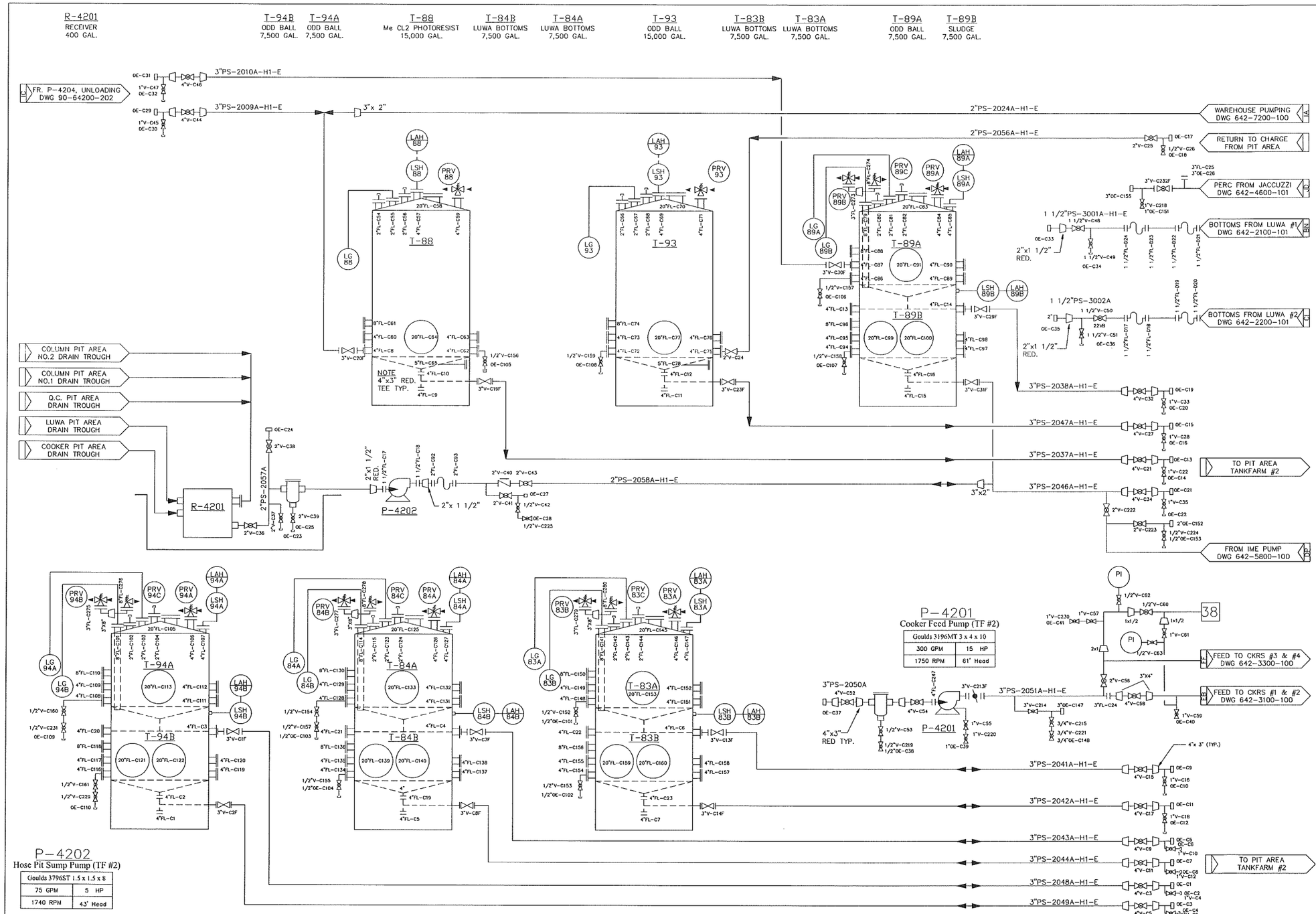

NOTES:

NOTE:
ALL HIGH LEVEL ALARM SIGNALS ARE INTERLOCKED WITH ALARM PANELS, OPERATOR TERMINALS AND, WHEN APPLICABLE, TO HIGH VOLUME PUMPS

LEGEND

LAH – LEVEL ALARM HIGH
VS – STEEL VALVE
VB – BRONZE VALVE
PI – PRESSURE INDICATOR
EJ – EXPANSION JOINT

DF=Exhibit 47A Rev. 3

EXHIBIT NO. 47A

NO.	DESCRIPTION	BY	P MGR APPR	PROC APPR	DATE
3	RCRA PERMIT RENEWAL UPDATE	KMC			12/12/14
2	UPDATED FOR RENEWAL PERMIT	SWL			7/22/02
1	ISSUED FOR PART "B" PERMIT MOD	RDK			3/5/92
0	ISSUED FOR PART "B" PERMIT	SPM			9/21/90

REVISIONS

PROPRIETARY STATEMENT

THIS DRAWING IS THE EXCLUSIVE PROPERTY OF CLEAN HARBORS AND IS PROPRIETARY AND CONFIDENTIAL INFORMATION. THIS DRAWING AND THE INFORMATION CONTAINED THEREIN MUST NOT BE DUPLICATED, USED, DIVULGED, REPRODUCED, COPIED, DISCLOSED OR APPROPRIATED IN WHOLE OR IN PART FOR ANY PURPOSE OTHER THAN AS EXPRESSLY AUTHORIZED BY CLEAN HARBORS. THIS DRAWING MUST BE RETURNED PROMPTLY UPON REQUEST.

TITLE

TANK FARM NO. 2
COOKER PIT AREA
PROCESS FLOW DIAGRAM

11	COOLING WATER SUPPLY	15	STEAM CONDENSATE RETURN	21	NITROGEN
12	COOLING WATER RETURN	16	INSTRUMENT AIR	22	BLOWDOWN/FLARE
13	STEAM SUPPLY	19	NATURAL GAS	24	PLANT WATER
27	VENT TO ATMOSPHERE	35	TREATED BFW	38	PLANT AIR
31	WATER SEWER	36	SEAL OIL SUPPLY		
32	DISCHARGE TO GRADE	37	SEAL OIL RETURN		

CleanHarbors
581 MILLIKEN DRIVE, HEBRON, OHIO 43025 PHONE (740) 929-3532

SCALE	BY	CHKD	APPROVED	OPERATIONS	DATE
NONE	WCC				1/30/82

HEBRON, OHIO
RECYCLE CENTER

DRAWING NUMBER 90-64200-200

REV. NO. 3

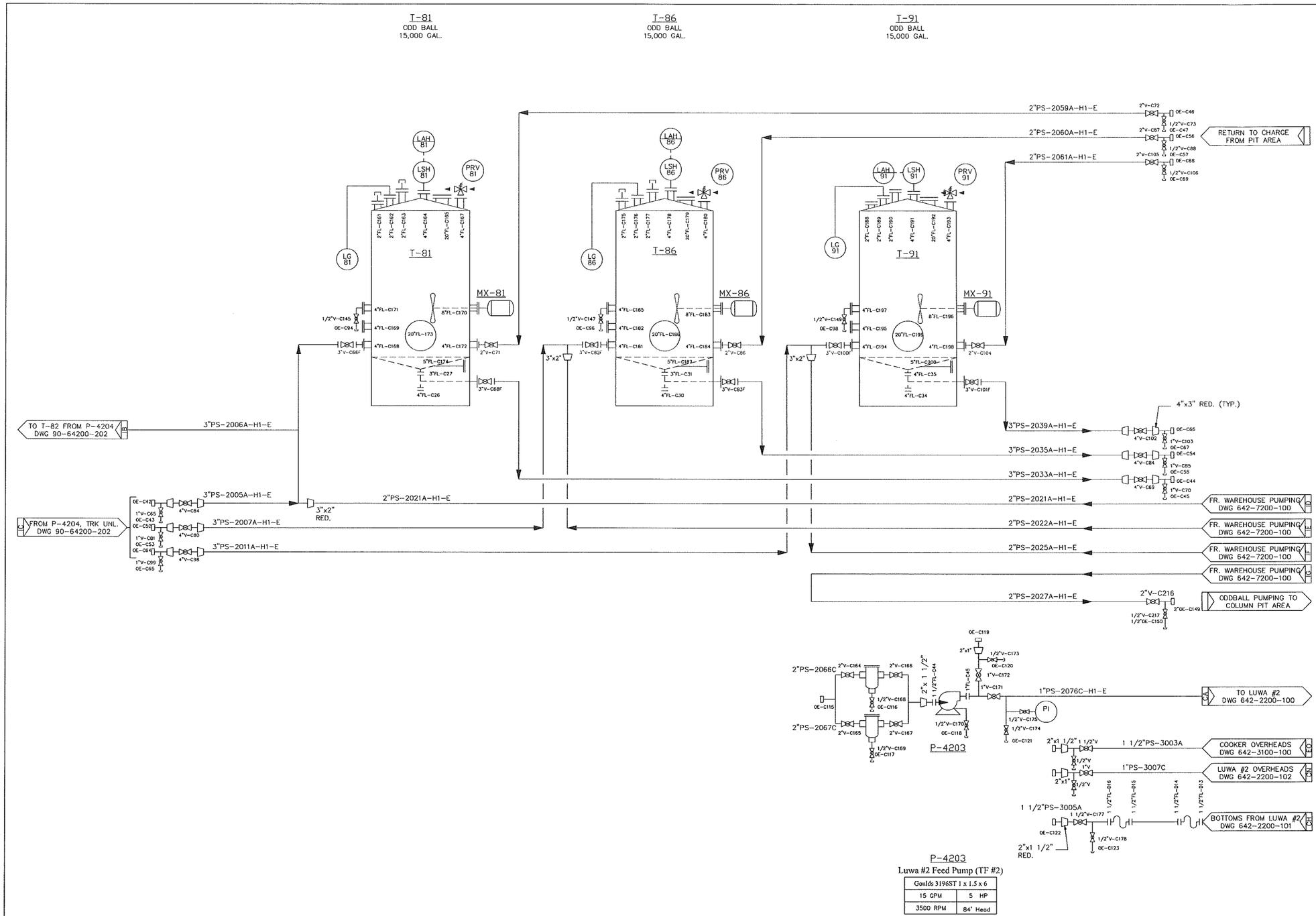

P-4203

Luwa #2 Feed Pump (TF #2)

Goulds 3196ST 1 x 1.5 x 6	
15 GPM	5 HP
3500 RPM	84' Head

NOTE:

NOTE:
ALL HIGH LEVEL ALARM SIGNALS ARE INTERLOCKED WITH ALARM PANELS. OPERATOR TERMINALS AND, WHEN APPLICABLE, TO HIGH VOLUME PUMPS

LEGEND

LAH - LEVEL ALARM HIGH
VS - STEEL VALVE
VB - BRONZE VALVE
PI - PRESSURE INDICATOR
EJ - EXPANSION JOINT

DF=Exhibit 47B Rev. 4

EXHIBIT NO. 47B

NO.	DESCRIPTION	BY	P MGR APPR	PROC APPR	DATE
4	RCRA PERMIT RENEWAL UPDATE	KMC			12/12/14
3	UPDATED FOR RENEWAL PERMIT	SWL			7/22/02
2	REVISED PER NOD 1994	MBH			10/17/94
1	ISSUED FOR PART "B" PERMIT NOD	RDK			3/5/92
0	ISSUED FOR PART "B" PERMIT	SPM			9/21/90

REVISIONS

PROPRIETARY STATEMENT

THIS DRAWING IS THE EXCLUSIVE PROPERTY OF CLEAN HARBORS AND IS PROPRIETARY AND CONFIDENTIAL INFORMATION. THIS DRAWING AND THE INFORMATION CONTAINED THEREIN MUST NOT BE DUPLICATED, USED, DIVULGED, REPRODUCED, COPIED, DISCLOSED OR APPROPRIATED IN WHOLE OR IN PART FOR ANY PURPOSE OTHER THAN AS EXPRESSLY AUTHORIZED BY CLEAN HARBORS. THIS DRAWING MUST BE RETURNED PROMPTLY UPON REQUEST.

TITLE

TANK FARM NO. 2
LUWA PIT AREA
PROCESS FLOW DIAGRAM
Sheet 1 of 2

11	COOLING WATER SUPPLY	15	STEAM CONDENSATE RETURN	21	NITROGEN
12	COOLING WATER RETURN	16	INSTRUMENT AIR	22	BLOWDOWN/FLARE
13	STEAM SUPPLY	19	NATURAL GAS	24	PLANT WATER
27	VENT TO ATMOSPHERE	35	TREATED BFW	38	PLANT AIR
31	WATER SEWER	36	SEAL OIL SUPPLY		
32	DISCHARGE TO GRADE	37	SEAL OIL RETURN		

CleanHarbors
581 MILLIKEN DRIVE, HEBRON, OHIO 43025 PHONE (740) 929-3532

SCALE	BY	CHKD	APPROVED	OPERATIONS	DATE
NONE	SPM			TS	6/6/86

HEBRON, OHIO RECYCLE CENTER	DRAWING NUMBER 90-64200-201	REV. NO. 4

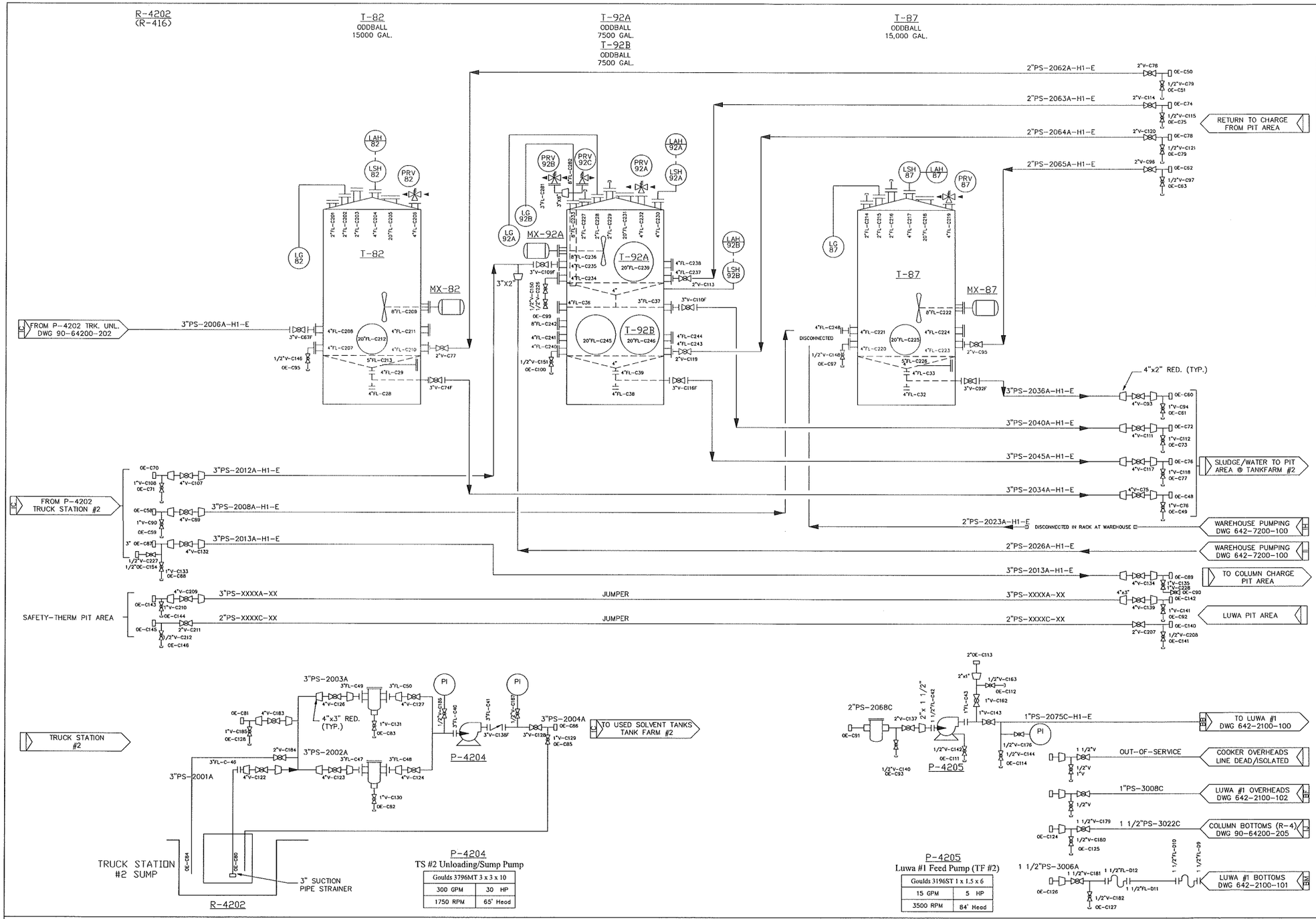

P-4204
TS #2 Unloading/Sump Pump

Goulds 3796MT 3 x 3 x 10	
300 GPM	30 HP
1750 RPM	65' Head

P-4205
Luwa #1 Feed Pump (TF #2)

Goulds 3196ST 1 x 1.5 x 6	
15 GPM	5 HP
3500 RPM	84' Head

NOTES:

NOTE:
ALL HIGH LEVEL ALARM SIGNALS ARE INTERLOCKED WITH ALARM PANELS, OPERATOR TERMINALS AND, WHEN APPLICABLE, TO HIGH VOLUME PUMPS

LEGEND

LAH - LEVEL ALARM HIGH
VS - STEEL VALVE
VB - BRONZE VALVE
PI - PRESSURE INDICATOR
EJ - EXPANSION JOINT

DF=Exhibit 47C Rev. 4

EXHIBIT NO. 47C

NO.	DESCRIPTION	BY	P MGR APPR	PROC APPR	DATE
4	RCRA PERMIT RENEWAL UPDATE	KMC			12/12/14
3	UPDATED FOR RENEWAL PERMIT	SWL			7/22/02
2	REVISED PER NOD 1994	MBH			10/17/94
1	ISSUED FOR PART "B" PERMIT NOD	RDK			3/5/92
0	ISSUED FOR PART "B" PERMIT	SPM			9/21/90

REVISIONS

PROPRIETARY STATEMENT

THIS DRAWING IS THE EXCLUSIVE PROPERTY OF CLEAN HARBORS AND IS PROPRIETARY AND CONFIDENTIAL INFORMATION. THIS DRAWING AND THE INFORMATION CONTAINED THEREIN MUST NOT BE DUPLICATED, USED, DIVULGED, REPRODUCED, COPIED, DISCLOSED OR APPROPRIATED IN WHOLE OR IN PART FOR ANY PURPOSE OTHER THAN AS EXPRESSLY AUTHORIZED BY CLEAN HARBORS. THIS DRAWING MUST BE RETURNED PROMPTLY UPON REQUEST.

TITLE

TANK FARM NO. 2
LUWA PIT AREA
PROCESS FLOW DIAGRAM
Sheet 2 of 2

11	COOLING WATER SUPPLY	15	STEAM CONDENSATE RETURN	21	NITROGEN
12	COOLING WATER RETURN	16	INSTRUMENT AIR	22	BLOWDOWN/FLARE
13	STEAM SUPPLY	19	NATURAL GAS	24	PLANT WATER
27	VENT TO ATMOSPHERE	35	TREATED BFW	38	PLANT AIR
31	WATER SEWER	36	SEAL OIL SUPPLY		
32	DISCHARGE TO GRADE	37	SEAL OIL RETURN		

CleanHarbors
581 MILLIKEN DRIVE, HEBRON, OHIO 43025 PHONE (740) 929-3532

SCALE	BY	CHKD	APPROVED	OPERATIONS	DATE
NONE	SPM			TS	6/6/86

HEBRON, OHIO
RECYCLE CENTER

DRAWING NUMBER 90-64200-202

REV. NO. 4

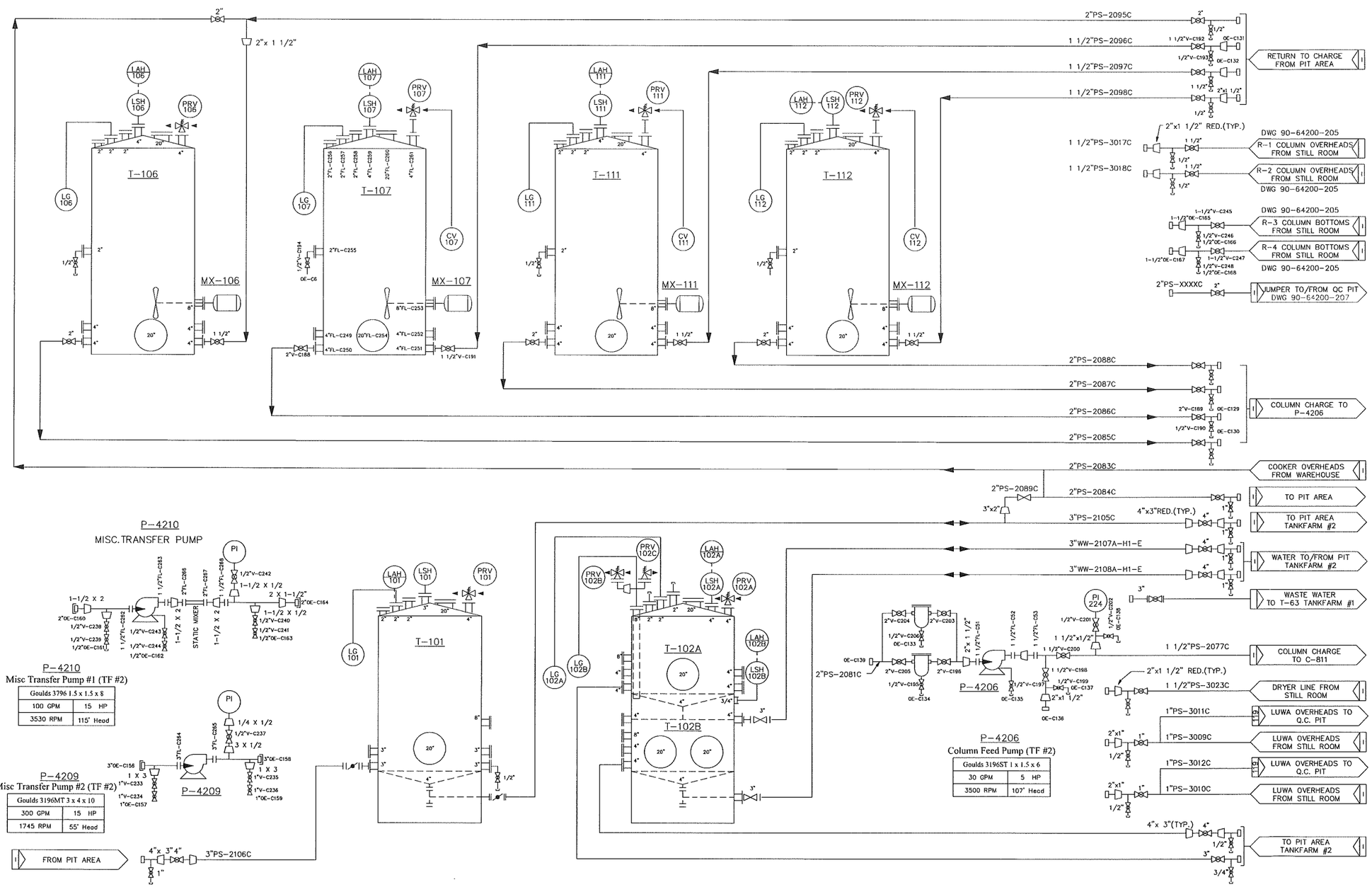

NOTE:

NOTE:
ALL HIGH LEVEL ALARM SIGNALS ARE INTERLOCKED WITH ALARM PANELS, OPERATOR TERMINALS AND, WHEN APPLICABLE, TO HIGH VOLUME PUMPS

LEGEND

LAH - LEVEL ALARM HIGH
VS - STEEL VALVE
VB - BRONZE VALVE
PI - PRESSURE INDICATOR
EJ - EXPANSION JOINT

DF=Exhibit 47D Rev. 4

EXHIBIT NO. 47D

NO.	DESCRIPTION	BY	P MGR APPR	PROC APPR	DATE
4	RCRA PERMIT RENEWAL UPDATE	KMC			12/12/14
3	UPDATED FOR RENEWAL PERMIT	SWL			7/23/02
2	REVISED PER NOD 1994	MBH			10/17/94
1	ISSUED FOR PART "B" PERMIT NOD	RDK			3/5/92
0	ISSUED FOR PART "B" PERMIT	SPM			9/21/90

REVISIONS

PROPRIETARY STATEMENT

THIS DRAWING IS THE EXCLUSIVE PROPERTY OF CLEAN HARBORS AND IS PROPRIETARY AND CONFIDENTIAL INFORMATION. THIS DRAWING AND THE INFORMATION CONTAINED THEREIN MUST NOT BE DUPLICATED, USED, DIVULGED, REPRODUCED, COPIED, DISCLOSED OR APPROPRIATED IN WHOLE OR IN PART FOR ANY PURPOSE OTHER THAN AS EXPRESSLY AUTHORIZED BY CLEAN HARBORS. THIS DRAWING MUST BE RETURNED PROMPTLY UPON REQUEST.

TITLE

TANK FARM NO. 2
COLUMN PIT AREA
PROCESS FLOW DIAGRAM
Sheet 2 of 2

CleanHarbors
581 MILLIKEN DRIVE, HEBRON, OHIO 43025 PHONE (740) 929-3532

SCALE	BY	CHKD	APPROVED	OPERATIONS	DATE
NONE	SPM			TS	6/9/86

HEBRON, OHIO RECYCLE CENTER	DRAWING NUMBER 90-64200-206	REV. NO. 4

11 COOLING WATER SUPPLY	15 STEAM CONDENSATE RETURN	21 NITROGEN	27 VENT TO ATMOSPHERE	35 TREATED BFW	38 PLANT AIR
12 COOLING WATER RETURN	16 INSTRUMENT AIR	22 BLOWDOWN/FLARE	31 WATER SEWER	36 SEAL OIL SUPPLY	
13 STEAM SUPPLY	19 NATURAL GAS	24 PLANT WATER	32 DISCHARGE TO GRADE	37 SEAL OIL RETURN	

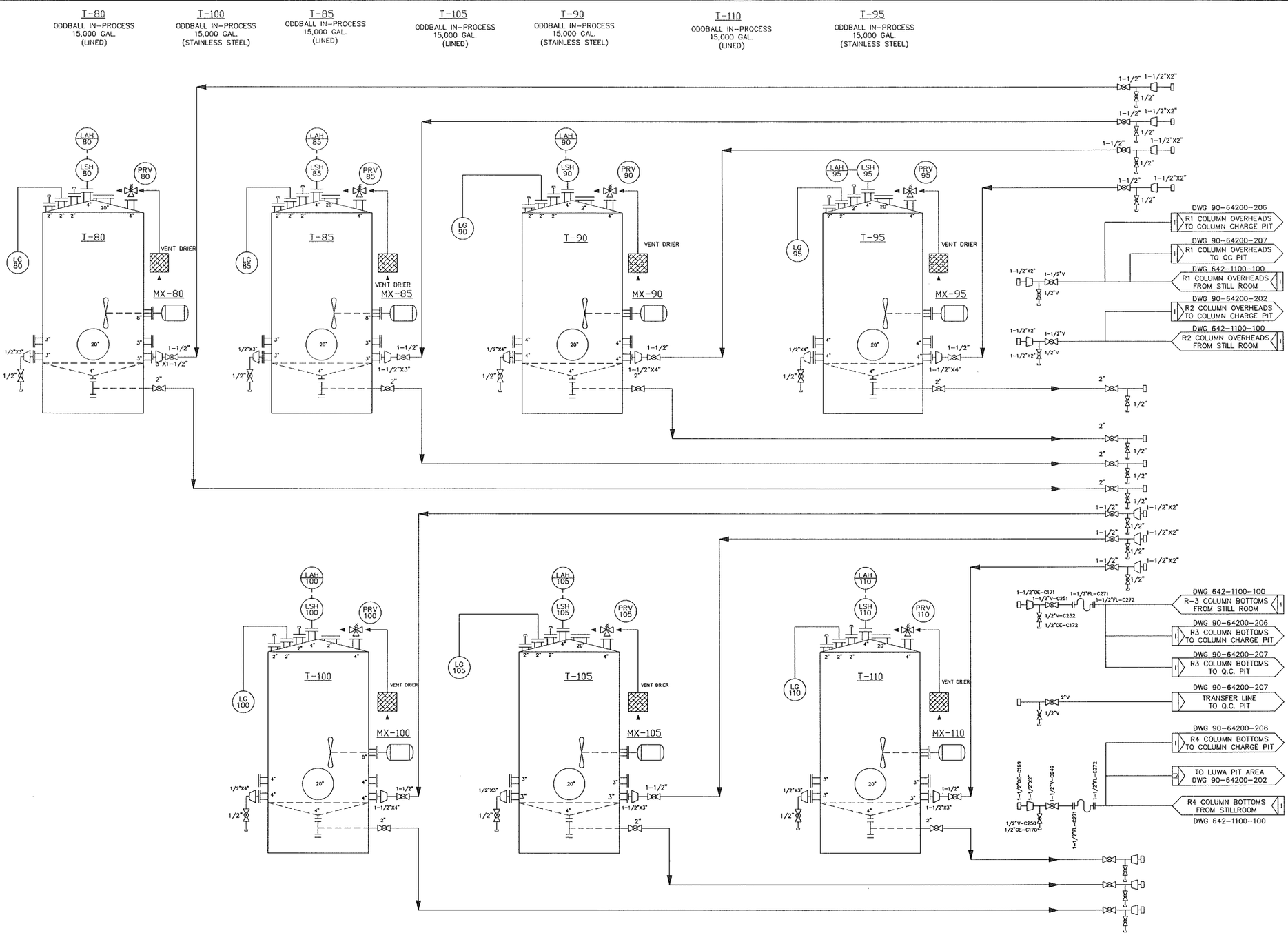

NOTES:

NOTE:
ALL HIGH LEVEL ALARM SIGNALS ARE INTERLOCKED WITH ALARM PANELS, OPERATOR TERMINALS AND, WHEN APPLICABLE, TO HIGH VOLUME PUMPS

LEGEND

LAH – LEVEL ALARM HIGH
VS – STEEL VALVE
VB – BRONZE VALVE
PI – PRESSURE INDICATOR
EJ – EXPANSION JOINT

DF=Exhibit 47E Rev. 4

EXHIBIT NO. 47E

NO.	DESCRIPTION	BY	P MGR APPR	PROC APPR	DATE
4	RCRA PERMIT RENEWAL UPDATE	KMC			12/12/14
3	UPDATED FOR RENEWAL PERMIT	SWL			7/23/02
2	REVISED PER NOD 1994	MBH			10/17/94
1	ISSUED FOR PART "B" PERMIT NOD	RDK			3/5/92
0	ISSUED FOR PART "B" PERMIT	SPM			9/21/90

REVISIONS

PROPRIETARY STATEMENT

THIS DRAWING IS THE EXCLUSIVE PROPERTY OF CLEAN HARBORS AND IS PROPRIETARY AND CONFIDENTIAL INFORMATION. THIS DRAWING AND THE INFORMATION CONTAINED THEREIN MUST NOT BE DUPLICATED, USED, DIVULGED, REPRODUCED, COPIED, DISCLOSED OR APPROPRIATED IN WHOLE OR IN PART FOR ANY PURPOSE OTHER THAN AS EXPRESSLY AUTHORIZED BY CLEAN HARBORS. THIS DRAWING MUST BE RETURNED PROMPTLY UPON REQUEST.

TITLE

TANK FARM NO. 2
COLUMN PIT AREA
PROCESS FLOW DIAGRAM
Sheet 1 of 2

11	COOLING WATER SUPPLY	15	STEAM CONDENSATE RETURN	21	NITROGEN
12	COOLING WATER RETURN	16	INSTRUMENT AIR	22	BLOWDOWN/FLARE
13	STEAM SUPPLY	19	NATURAL GAS	24	PLANT WATER
27	VENT TO ATMOSPHERE	35	TREATED BFW	38	PLANT AIR
31	WATER SEWER	36	SEAL OIL SUPPLY		
32	DISCHARGE TO GRADE	37	SEAL OIL RETURN		

CleanHarbors
581 MILLIKEN DRIVE, HEBRON, OHIO 43025 PHONE (740) 929-3532

SCALE	BY	CHKD	APPROVED	OPERATIONS	DATE
NONE	SPM			TS	6/8/86

HEBRON, OHIO RECYCLE CENTER	DRAWING NUMBER	REV. NO.
	90-64200-205	4

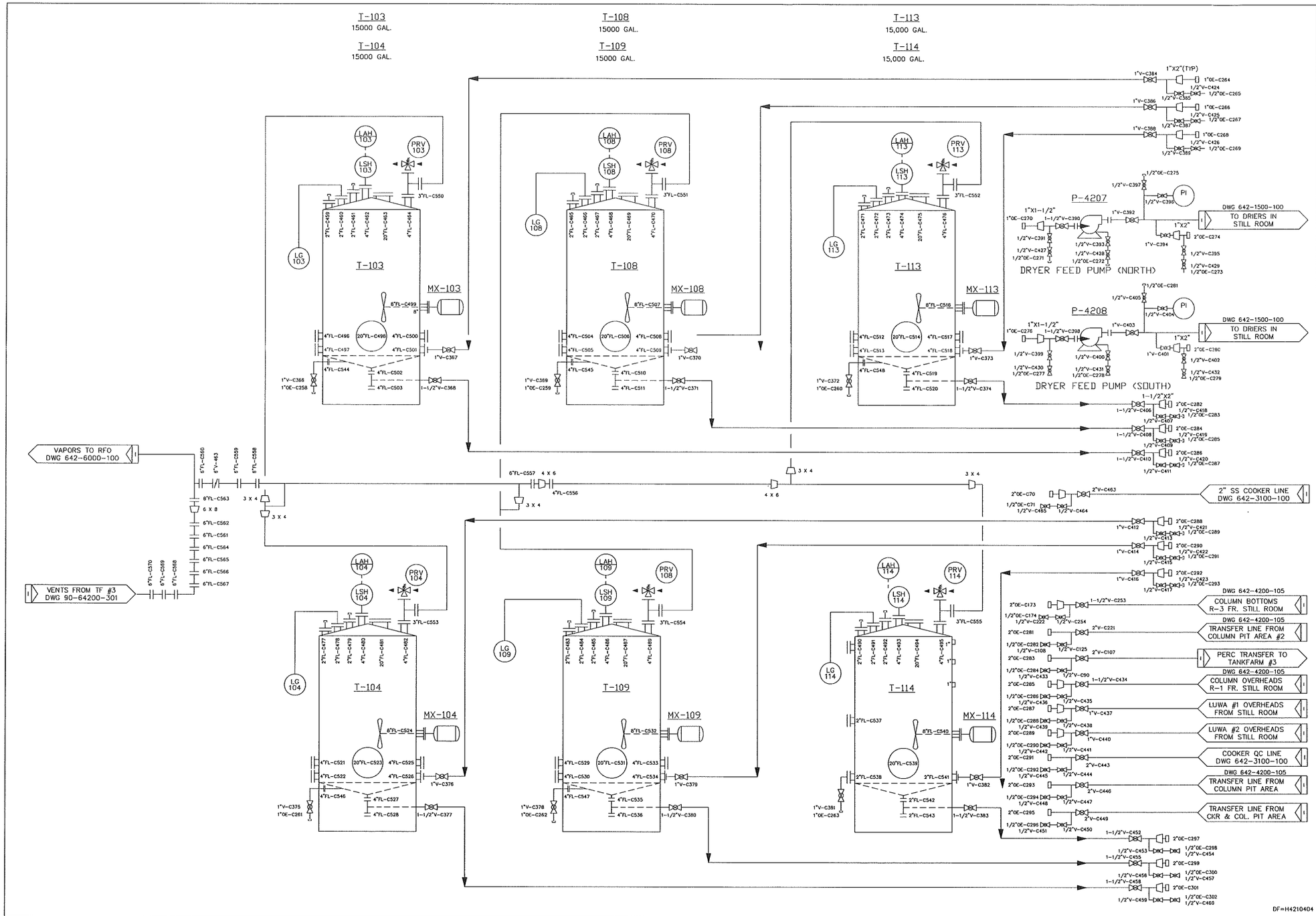

NOTES:

THIS DRAWING WAS MADE FROM S/K DRAWING No. 85-64201-119 R/1.

EXHIBIT NO. 47F

NO.	DESCRIPTION	BY	CHK	P MGR APPR	PROC APPR	DATE
04	RCRA PERMIT RENEWAL UPDATE	KMC				12/12/14
03	ADDED VENTLINE TO RFO	GK				12/1/06
02	ADDED SUBPART DD LABELS	GK				12/2/04
01	AS-BUILT REVISION	GK				9/15/97

REVISIONS

PROPRIETARY STATEMENT

THIS DRAWING IS THE EXCLUSIVE PROPERTY OF CLEAN HARBORS AND IS PROPRIETARY AND CONFIDENTIAL INFORMATION. THIS DRAWING AND THE INFORMATION CONTAINED THEREIN MUST NOT BE DUPLICATED, USED, DIVULGED, REPRODUCED, COPIED, DISCLOSED OR APPROPRIATED IN WHOLE OR IN PART FOR ANY PURPOSE OTHER THAN AS EXPRESSLY AUTHORIZED BY CLEAN HARBORS. THIS DRAWING MUST BE RETURNED PROMPTLY UPON REQUEST.

TITLE

Q/C PIT AREA P & ID
TANK FARM No. 4200

11	COOLING WATER SUPPLY	15	STEAM CONDENSATE RETURN	21	NITROGEN
12	COOLING WATER RETURN	16	INSTRUMENT AIR	22	BLOWDOWN/FLARE
13	STEAM SUPPLY	19	NATURAL GAS	24	PLANT WATER
27	VENT TO ATMOSPHERE	35	TREATED BFW	38	PLANT AIR
31	WATER SEWER	36	SEAL OIL SUPPLY		
32	DISCHARGE TO GRADE	37	SEAL OIL RETURN		

CleanHarbors
581 MILLIKEN DRIVE, HEBRON, OHIO 43025 PHONE (740) 929-3532

SCALE	BY	CHKD	APPROVED	OPERATIONS	DATE
NONE	GK				2/12/95

RECYCLE CENTER LOCATION	DRAWING NUMBER	REV. NO.
HEBRON, OHIO RECYCLE CENTER	642-4200-104	04

12-12-14

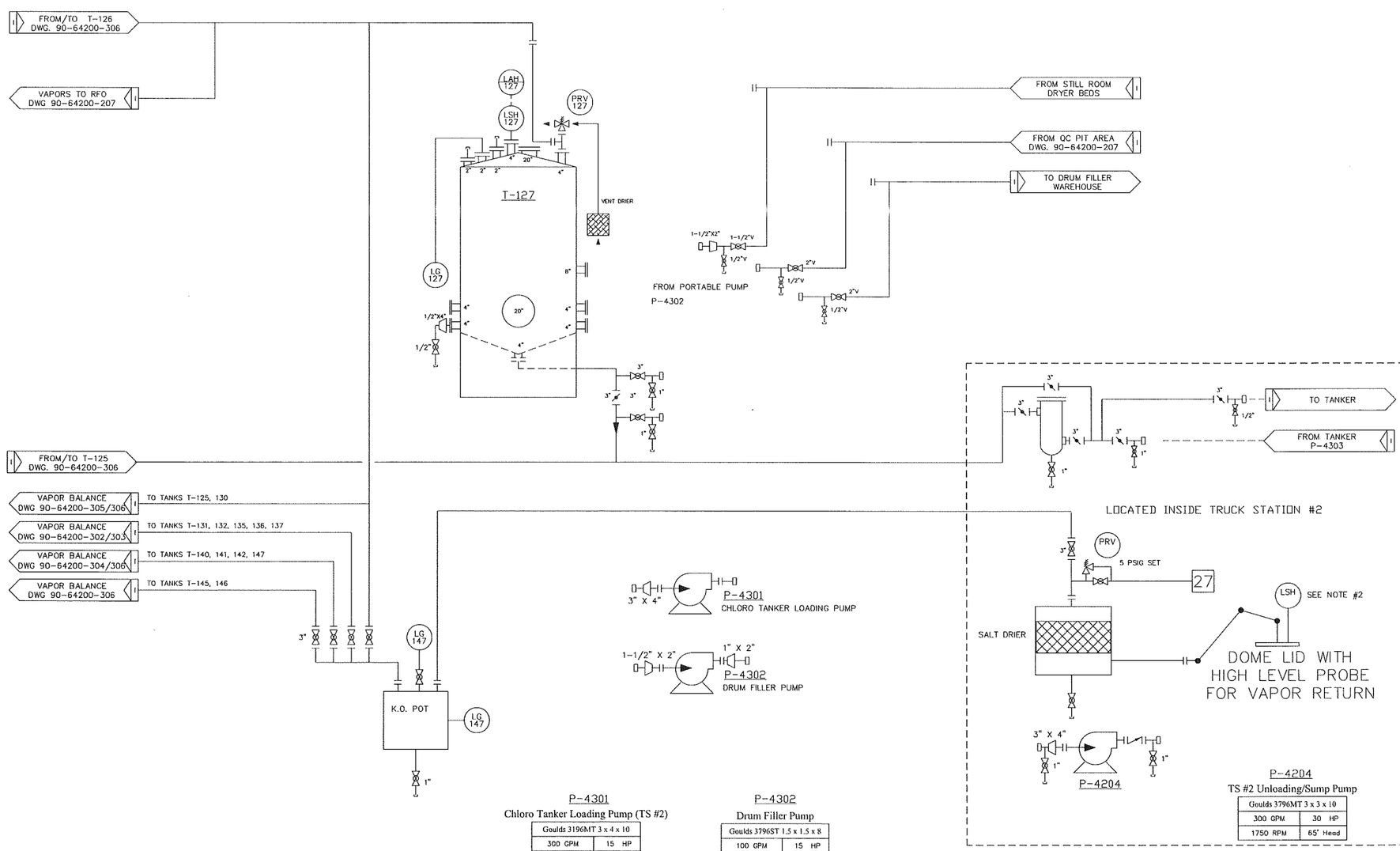

P-4301 Chloro Tanker Loading Pump (TS #2)	
Goulds 3196MT 3 x 4 x 10	
300 GPM	15 HP
1745 RPM	55' Head

P-4302 Drum Filler Pump	
Goulds 3796ST 1.5 x 1.5 x 8	
100 GPM	15 HP
3500 RPM	115' Head

P-4204 TS #2 Unloading/Sump Pump	
Goulds 3796MT 3 x 3 x 10	
300 GPM	30 HP
1750 RPM	65' Head

NOTES:

1. HIGH LEVEL SWITCHES ARE INTERLOCKED WITH P-4303
2. HIGH LEVEL SWITCH ON TANKER DOME INTERLOCKED WITH P-4301

NOTE:
ALL HIGH LEVEL ALARM SIGNALS ARE INTERLOCKED WITH ALARM PANELS, OPERATOR TERMINALS AND, WHEN APPLICABLE, TO HIGH VOLUME PUMPS

LEGEND

LAH - LEVEL ALARM HIGH
VS - STEEL VALVE
VB - BRONZE VALVE
PI - PRESSURE INDICATOR
EJ - EXPANSION JOINT

DF=Exhibit 48A Rev. 2

EXHIBIT NO. 48A

NO.	DESCRIPTION	BY	P MGR APPR	PROC APPR	DATE
2	RCRA PERMIT RENEWAL UPDATE	KMC			12/12/14
1	UPDATED FOR RENEWAL PERMIT	SWL			7/24/02
0	ISSUED FOR PART "B" PERMIT	SPM			9/21/90

REVISIONS

PROPRIETARY STATEMENT

THIS DRAWING IS THE EXCLUSIVE PROPERTY OF CLEAN HARBORS AND IS PROPRIETARY AND CONFIDENTIAL INFORMATION. THIS DRAWING AND THE INFORMATION CONTAINED THEREIN MUST NOT BE DUPLICATED, USED, DIVULGED, REPRODUCED, COPIED, DISCLOSED OR APPROPRIATED IN WHOLE OR IN PART FOR ANY PURPOSE OTHER THAN AS EXPRESSLY AUTHORIZED BY CLEAN HARBORS. THIS DRAWING MUST BE RETURNED PROMPTLY UPON REQUEST.

TITLE

TANK FARM NO. 3
METHYLENE CHLORIDE
FINISHED PRODUCT
PROCESS FLOW DIAGRAM

CleanHarbors
581 MILLIKEN DRIVE, HEBRON, OHIO 43025 PHONE (740) 929-3532

SCALE	BY	CHKD	APPROVED	OPERATIONS	DATE
NONE	SPM				6/11/86

HEBRON, OHIO RECYCLE CENTER	DRAWING NUMBER 90-64200-301	REV. NO. 2

11	COOLING WATER SUPPLY	15	STEAM CONDENSATE RETURN	21	NITROGEN
12	COOLING WATER RETURN	16	INSTRUMENT AIR	22	BLOWDOWN/FLARE
13	STEAM SUPPLY	19	NATURAL GAS	24	PLANT WATER
27	VENT TO ATMOSPHERE	35	TREATED BFW	38	PLANT AIR
31	WATER SEWER	36	SEAL OIL SUPPLY		
32	DISCHARGE TO GRADE	37	SEAL OIL RETURN		

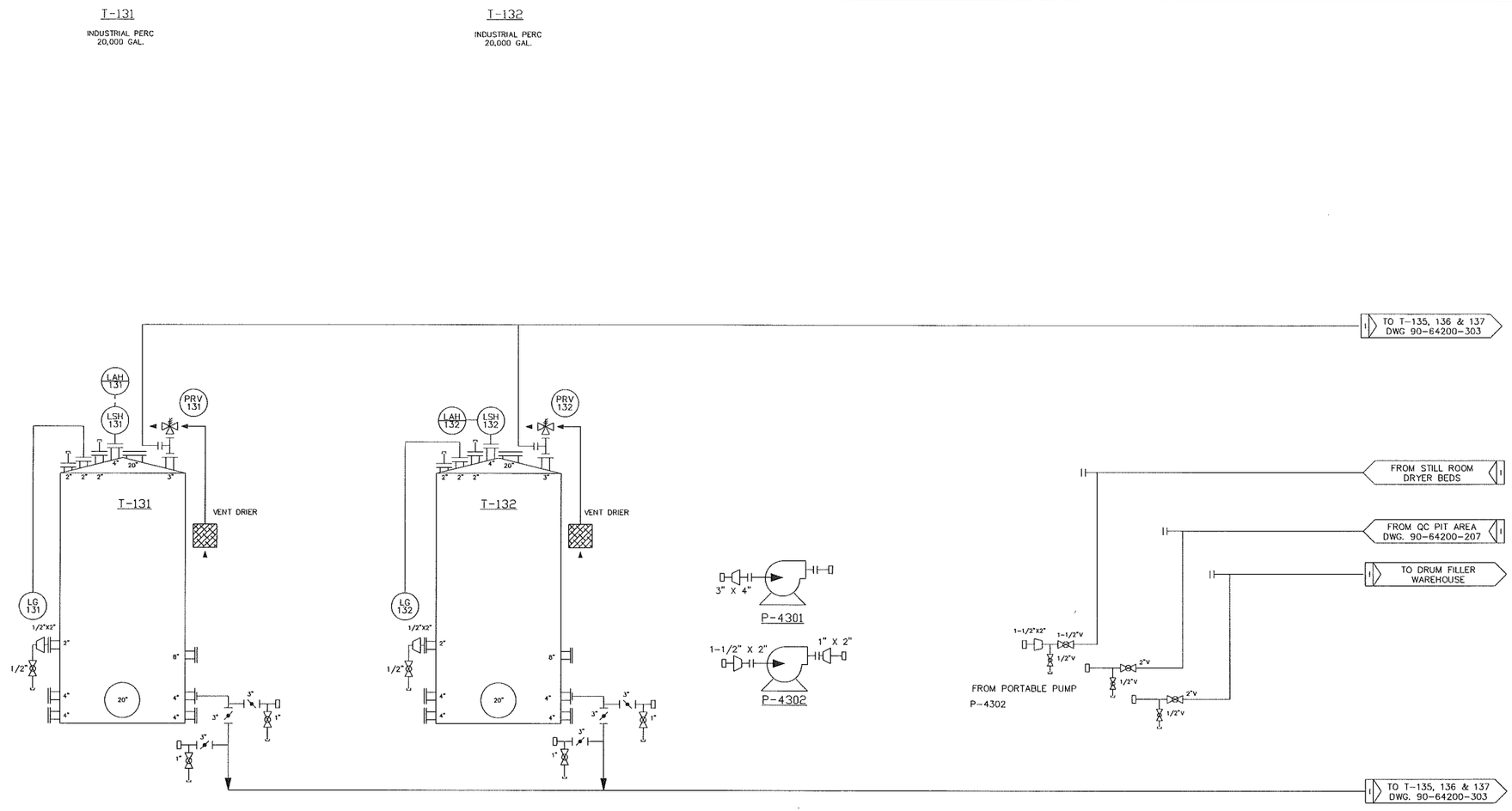

NOTES:

NOTE:
ALL HIGH LEVEL ALARM SIGNALS ARE INTERLOCKED WITH ALARM PANELS, OPERATOR TERMINALS AND, WHEN APPLICABLE, TO HIGH VOLUME PUMPS

LEGEND

LAH – LEVEL ALARM HIGH
VS – STEEL VALVE
VB – BRONZE VALVE
PI – PRESSURE INDICATOR
EJ – EXPANSION JOINT

P-4301
Chloro Tanker Loading Pump (TS #2)

Goulds 3196MT 3 x 4 x 10	
300 GPM	15 HP
1745 RPM	55' Head

P-4302
Drum Filler Pump

Goulds 3796ST 1.5 x 1.5 x 8	
100 GPM	15 HP
3500 RPM	115' Head

11 COOLING WATER SUPPLY	15 STEAM CONDENSATE RETURN	21 NITROGEN	27 VENT TO ATMOSPHERE	35 TREATED BFW	38 PLANT AIR
12 COOLING WATER RETURN	16 INSTRUMENT AIR	22 BLOWDOWN/FLARE	31 WATER SEWER	36 SEAL OIL SUPPLY	
13 STEAM SUPPLY	19 NATURAL GAS	24 PLANT WATER	32 DISCHARGE TO GRADE	37 SEAL OIL RETURN	

DF=Exhibit 48B Rev. 3

EXHIBIT NO. 48B

NO.	DESCRIPTION	BY	P MGR APPR	PROC APPR	DATE
3	RCRA PERMIT RENEWAL UPDATE	KMC			12/12/14
2	UPDATED FOR RENEWAL PERMIT	SWL			7/24/02
1	REVISED PER NOD 1994	MBH			10/17/84
0	ISSUED FOR PART "B" PERMIT	SPM			9/20/90

REVISIONS

PROPRIETARY STATEMENT

THIS DRAWING IS THE EXCLUSIVE PROPERTY OF CLEAN HARBORS AND IS PROPRIETARY AND CONFIDENTIAL INFORMATION. THIS DRAWING AND THE INFORMATION CONTAINED THEREIN MUST NOT BE DUPLICATED, USED, DIVULGED, REPRODUCED, COPIED, DISCLOSED OR APPROPRIATED IN WHOLE OR IN PART FOR ANY PURPOSE OTHER THAN AS EXPRESSLY AUTHORIZED BY CLEAN HARBORS. THIS DRAWING MUST BE RETURNED PROMPTLY UPON REQUEST.

TITLE
TANK FARM NO. 3
INDUSTRIAL PERCHLOROETHYLENE
FINISHED PRODUCT
PROCESS FLOW DIAGRAM

CleanHarbors
581 MILLIKEN DRIVE, HEBRON, OHIO 43025 PHONE (740) 929-3532

SCALE	BY	CHKD	APPROVED	OPERATIONS	DATE
NONE	SPM			TS	4/11/86

HEBRON, OHIO RECYCLE CENTER	DRAWING NUMBER 90-64200-302	REV. NO. 3

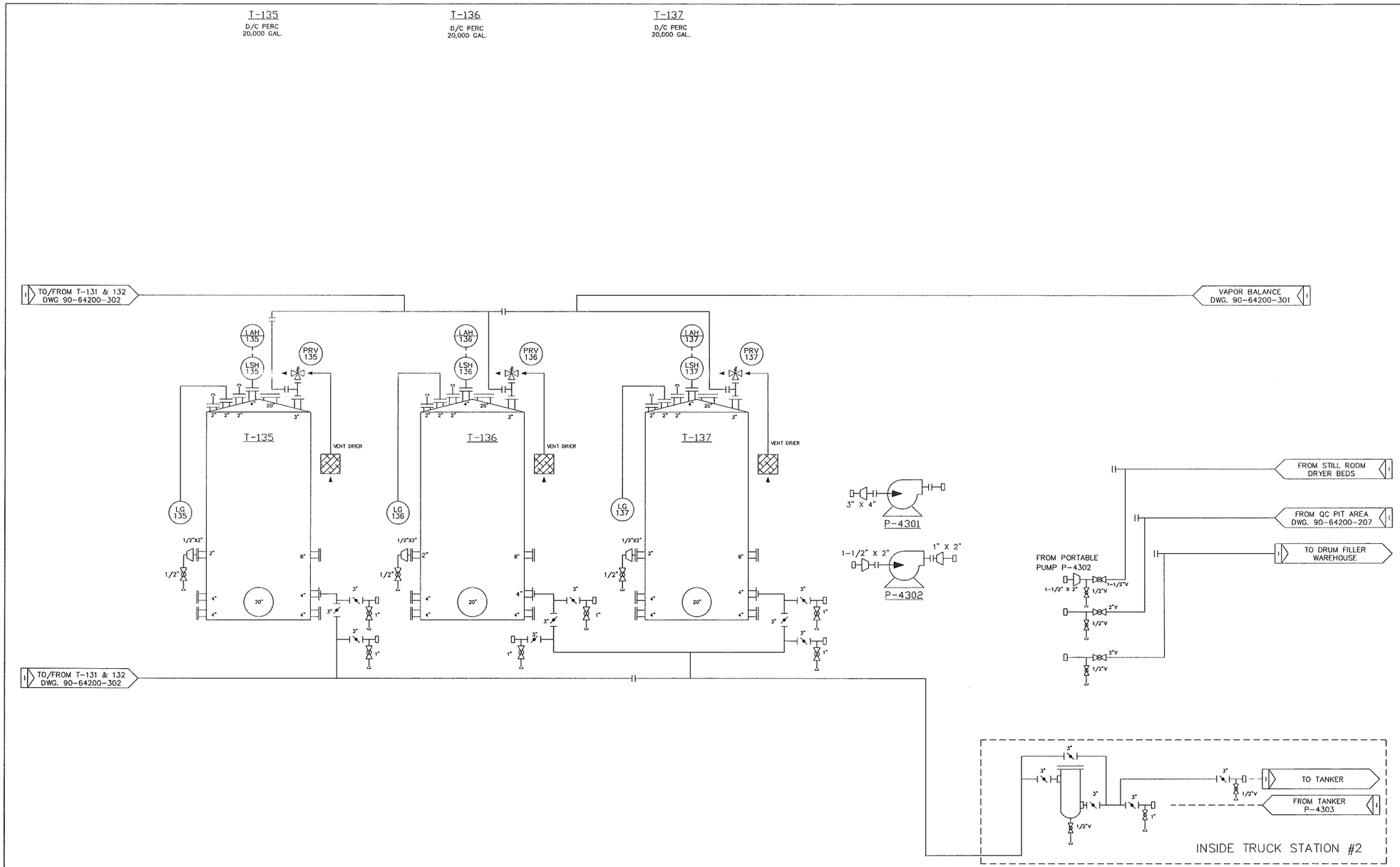

NOTES:

NOTE:
ALL HIGH LEVEL ALARM SIGNALS ARE INTERLOCKED WITH ALARM PANELS, OPERATOR TERMINALS AND, WHEN APPLICABLE, TO HIGH VOLUME PUMPS

LEGEND

LAH - LEVEL ALARM HIGH
VS - STEEL VALVE
VB - BRONZE VALVE
PI - PRESSURE INDICATOR
EJ - EXPANSION JOINT

P-4301
Chloro Tanker Loading Pump (TS #2)

Goulds 3196MT 3 x 4 x 10	
300 GPM	15 HP
1745 RPM	55' Head

P-4302
Drum Filler Pump

Goulds 3796ST 1.5 x 1.5 x 8	
100 GPM	15 HP
3500 RPM	115' Head

11	COOLING WATER SUPPLY	15	STEAM CONDENSATE RETURN	21	NITROGEN
12	COOLING WATER RETURN	16	INSTRUMENT AIR	22	BLOWDOWN/FLARE
13	STEAM SUPPLY	19	NATURAL GAS	24	PLANT WATER
27	VENT TO ATMOSPHERE	35	TREATED BFW	38	PLANT AIR
31	WATER SEWER	36	SEAL OIL SUPPLY		
32	DISCHARGE TO GRADE	37	SEAL OIL RETURN		

DF=Exhibit 48C Rev. 3

EXHIBIT NO. 48C

NO.	DESCRIPTION	BY	P MGR APPR	PROC APPR	DATE
3	RCRA PERMIT RENEWAL UPDATE	KMC			12/12/14
2	UPDATED FOR RENEWAL PERMIT	SWL			7/25/02
1	REVISED PER NOD 1994	MBH			10/17/94
0	ISSUED FOR PART "B" PERMIT	SPM			9/20/90

REVISIONS

PROPRIETARY STATEMENT

THIS DRAWING IS THE EXCLUSIVE PROPERTY OF CLEAN HARBORS AND IS PROPRIETARY AND CONFIDENTIAL INFORMATION. THIS DRAWING AND THE INFORMATION CONTAINED THEREIN MUST NOT BE DUPLICATED, USED, DIVULGED, REPRODUCED, COPIED, DISCLOSED OR APPROPRIATED IN WHOLE OR IN PART FOR ANY PURPOSE OTHER THAN AS EXPRESSLY AUTHORIZED BY CLEAN HARBORS. THIS DRAWING MUST BE RETURNED PROMPTLY UPON REQUEST.

TITLE

TANK FARM NO. 3
DRY CLEANER PERCHLOROETHYLENE
FINISHED PRODUCT
PROCESS FLOW DIAGRAM

CleanHarbors
581 MILLIKEN DRIVE, HEBRON, OHIO 43025 PHONE (740) 929-3532

SCALE	BY	CHKD	APPROVED	OPERATIONS	DATE
NONE	SPM			TS	4/11/86

HEBRON, OHIO RECYCLE CENTER	DRAWING NUMBER 90-64200-303	REV. NO. 3

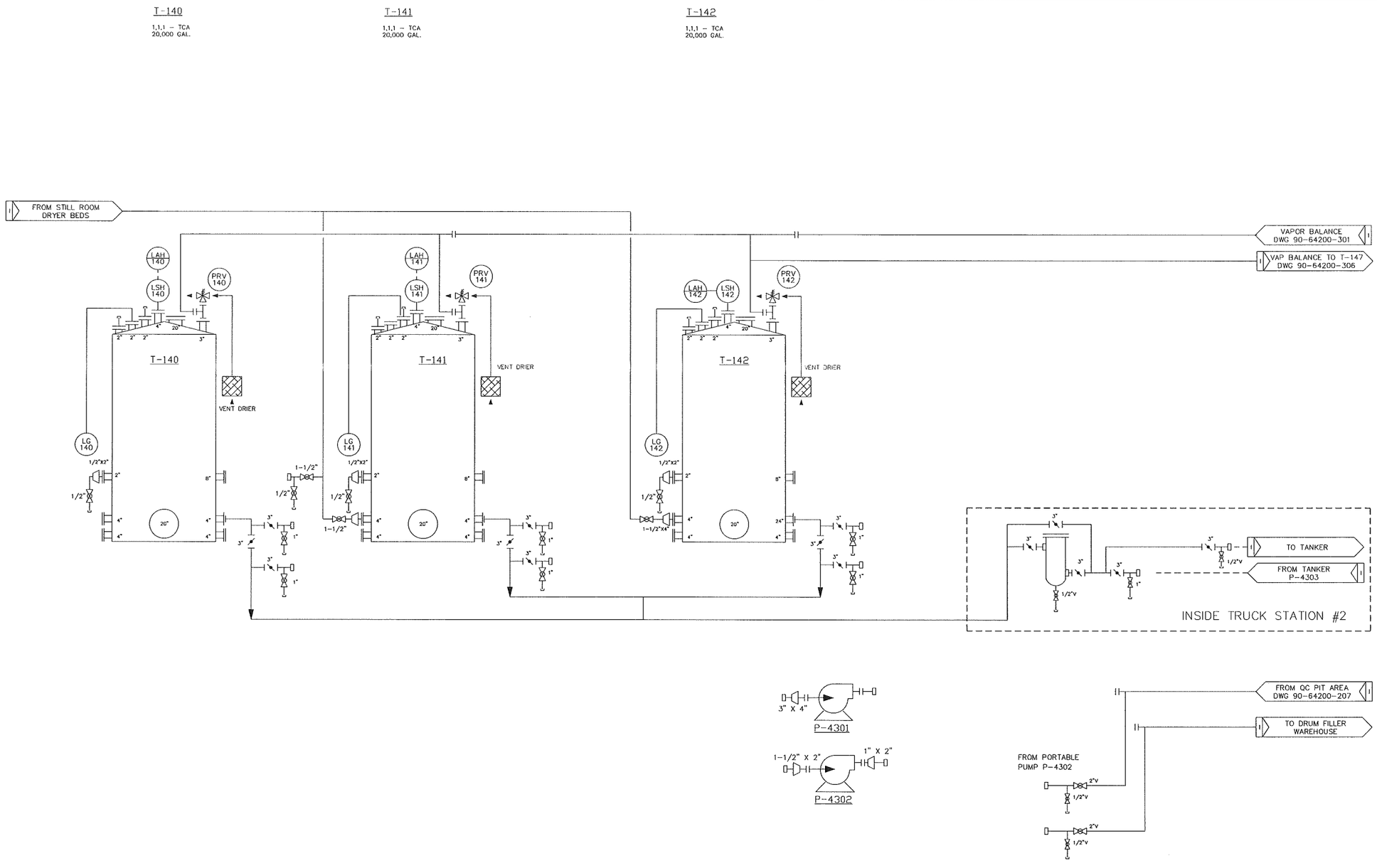

NOTES:

NOTE:
ALL HIGH LEVEL ALARM SIGNALS ARE INTERLOCKED WITH ALARM PANELS, OPERATOR TERMINALS AND, WHEN APPLICABLE, TO HIGH VOLUME PUMPS

LEGEND

LAH – LEVEL ALARM HIGH
VS – STEEL VALVE
VB – BRONZE VALVE
PI – PRESSURE INDICATOR
EJ – EXPANSION JOINT

P-4301
Chloro Tanker Loading Pump (TS #2)

Goulds 3196MT 3 x 4 x 10	
300 GPM	15 HP
1745 RPM	55' Head

P-4302
Drum Filler Pump

Goulds 3796ST 1.5 x 1.5 x 8	
100 GPM	15 HP
3500 RPM	115' Head

DF=Exhibit 48D Rev. 3

EXHIBIT NO. 48D

NO.	DESCRIPTION	BY	P MGR APPR	PROC APPR	DATE
3	RCRA PERMIT RENEWAL UPDATE	KMC			12/12/14
2	UPDATED FOR RENEWAL PERMIT	SWL			7/25/02
1	REVISED PER NOD 1994	MBH			10/17/94
0	ISSUED FOR PART "B" PERMIT	SPM			9/20/90

REVISIONS

PROPRIETARY STATEMENT

THIS DRAWING IS THE EXCLUSIVE PROPERTY OF CLEAN HARBORS AND IS PROPRIETARY AND CONFIDENTIAL INFORMATION. THIS DRAWING AND THE INFORMATION CONTAINED THEREIN MUST NOT BE DUPLICATED, USED, DIVULGED, REPRODUCED, COPIED, DISCLOSED OR APPROPRIATED IN WHOLE OR IN PART FOR ANY PURPOSE OTHER THAN AS EXPRESSLY AUTHORIZED BY CLEAN HARBORS. THIS DRAWING MUST BE RETURNED PROMPTLY UPON REQUEST.

TITLE

TANK FARM NO. 3
1,1,1 – TRICHLOROETHANE
FINISHED PRODUCT
PROCESS FLOW DIAGRAM

11	COOLING WATER SUPPLY	15	STEAM CONDENSATE RETURN
12	COOLING WATER RETURN	16	INSTRUMENT AIR
13	STEAM SUPPLY	19	NATURAL GAS
21	NITROGEN	27	VENT TO ATMOSPHERE
22	BLOWDOWN/FLARE	31	WATER SEWER
24	PLANT WATER	32	DISCHARGE TO GRADE
35	TREATED BFW	38	PLANT AIR
36	SEAL OIL SUPPLY		
37	SEAL OIL RETURN		

CleanHarbors
581 MILLIKEN DRIVE, HEBRON, OHIO 43025 PHONE (740) 929-3532

SCALE	BY	CHKD	APPROVED	OPERATIONS	DATE
NONE	SPM			TS	4/11/86

HEBRON, OHIO RECYCLE CENTER	DRAWING NUMBER 90-64200-304	REV. NO. 3

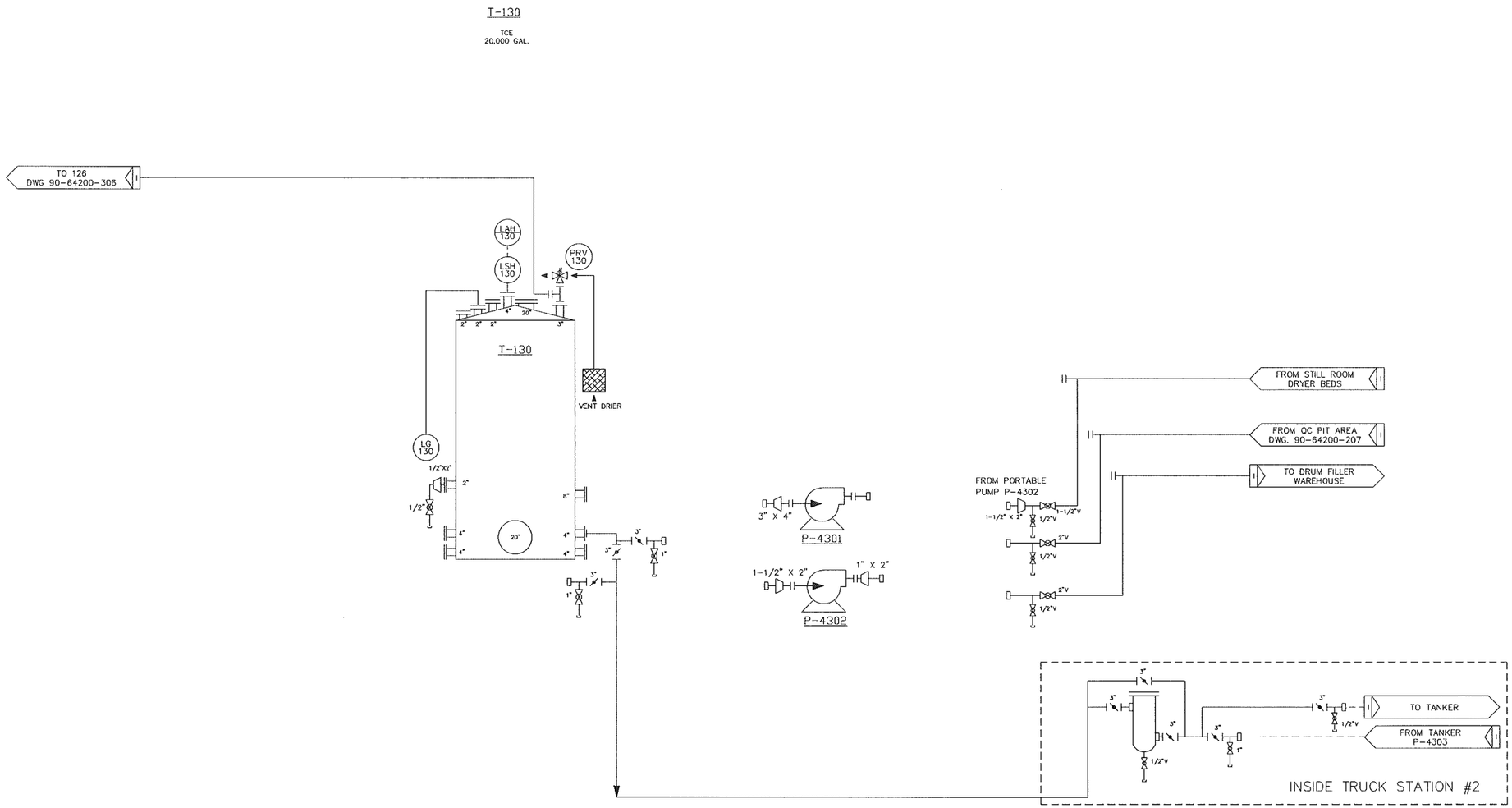

NOTES:

NOTE:
ALL HIGH LEVEL ALARM SIGNALS ARE INTERLOCKED WITH ALARM PANELS, OPERATOR TERMINALS AND, WHEN APPLICABLE, TO HIGH VOLUME PUMPS

LEGEND

LAH – LEVEL ALARM HIGH
VS – STEEL VALVE
VB – BRONZE VALVE
PI – PRESSURE INDICATOR
EJ – EXPANSION JOINT

P-4301
Chloro Tanker Loading Pump (TS #2)

Goulds 3196MT 3 x 4 x 10	
300 GPM	15 HP
1745 RPM	55' Head

P-4302
Drum Filler Pump

Goulds 3796ST 1.5 x 1.5 x 8	
100 GPM	15 HP
3500 RPM	115' Head

11 COOLING WATER SUPPLY	15 STEAM CONDENSATE RETURN	21 NITROGEN	27 VENT TO ATMOSPHERE	35 TREATED BFW	38 PLANT AIR
12 COOLING WATER RETURN	16 INSTRUMENT AIR	22 BLOWDOWN/FLARE	31 WATER SEWER	36 SEAL OIL SUPPLY	
13 STEAM SUPPLY	19 NATURAL GAS	24 PLANT WATER	32 DISCHARGE TO GRADE	37 SEAL OIL RETURN	

EXHIBIT NO. 48E

DF=Exhibit 48E Rev. 3

NO.	DESCRIPTION	BY	P MGR APPR	PROC APPR	DATE
3	RCRA PERMIT RENEWAL UPDATE	KMC			12/12/14
2	UPDATED FOR RENEWAL PERMIT	SWL			7/25/02
1	REVISED PER NOD 1994	MBH			10/17/94
0	ISSUED FOR PART "B" PERMIT	SPM			9/20/90

REVISIONS

PROPRIETARY STATEMENT

THIS DRAWING IS THE EXCLUSIVE PROPERTY OF CLEAN HARBORS AND IS PROPRIETARY AND CONFIDENTIAL INFORMATION. THIS DRAWING AND THE INFORMATION CONTAINED THEREIN MUST NOT BE DUPLICATED, USED, DIVULGED, REPRODUCED, COPIED, DISCLOSED OR APPROPRIATED IN WHOLE OR IN PART FOR ANY PURPOSE OTHER THAN AS EXPRESSLY AUTHORIZED BY CLEAN HARBORS. THIS DRAWING MUST BE RETURNED PROMPTLY UPON REQUEST.

TITLE

TANK FARM NO. 3
TRICHLOROETHYLENE
FINISHED PRODUCT
PROCESS FLOW DIAGRAM

CleanHarbors
581 MILLIKEN DRIVE, HEBRON, OHIO 43025 PHONE (740) 929-3532

SCALE	BY	CHKD	APPROVED	OPERATIONS	DATE
NONE	SPM			TS	4/11/86

HEBRON, OHIO RECYCLE CENTER	DRAWING NUMBER 90-64200-305	REV. NO. 3

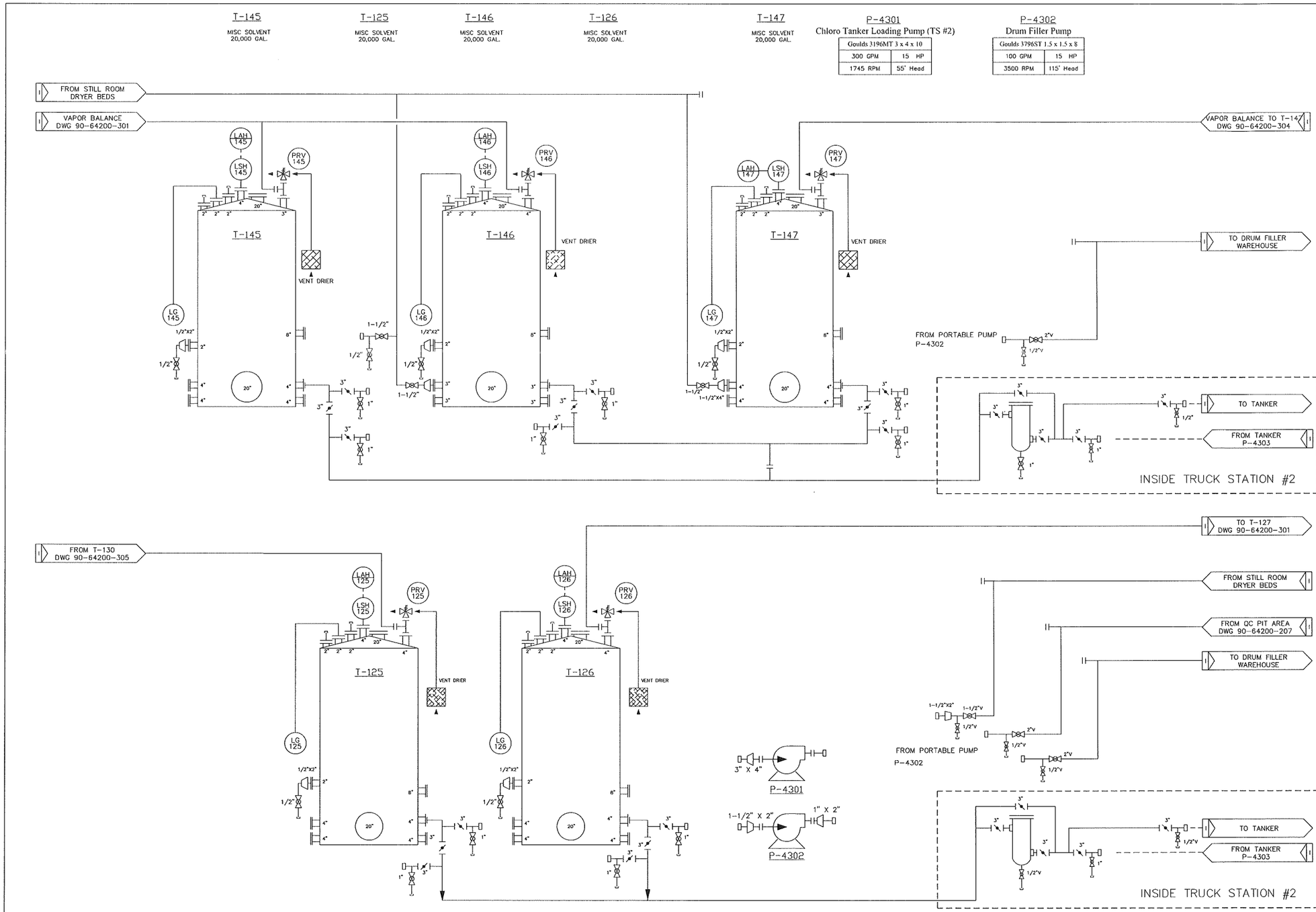

NOTES:

NOTE:
ALL HIGH LEVEL ALARM SIGNALS ARE INTERLOCKED WITH ALARM PANELS, OPERATOR TERMINALS AND, WHEN APPLICABLE, TO HIGH VOLUME PUMPS

LEGEND

LAH - LEVEL ALARM HIGH
VS - STEEL VALVE
VB - BRONZE VALVE
PI - PRESSURE INDICATOR
EJ - EXPANSION JOINT

DF=Exhibit 48F Rev. 1

EXHIBIT NO. 48F

NO.	DESCRIPTION	BY	P MGR APPR	PROC APPR	DATE
1	RCRA PERMIT RENEWAL UPDATE	KMC			12/12/14
0	ISSUED FOR PART B REMIT RENEWAL	SWL			7/25/02

REVISIONS

PROPRIETARY STATEMENT

THIS DRAWING IS THE EXCLUSIVE PROPERTY OF CLEAN HARBORS AND IS PROPRIETARY AND CONFIDENTIAL INFORMATION. THIS DRAWING AND THE INFORMATION CONTAINED THEREIN MUST NOT BE DUPLICATED, USED, DIVULGED, REPRODUCED, COPIED, DISCLOSED OR APPROPRIATED IN WHOLE OR IN PART FOR ANY PURPOSE OTHER THAN AS EXPRESSLY AUTHORIZED BY CLEAN HARBORS. THIS DRAWING MUST BE RETURNED PROMPTLY UPON REQUEST.

TITLE

TANK FARM NO. 3
MISC SOLVENT
FINISHED PRODUCT
PROCESS FLOW DIAGRAM

CleanHarbors®
581 MILLIKEN DRIVE, HEBRON, OHIO 43025 PHONE (740) 929-3532

SCALE	BY	CHKD	APPROVED	OPERATIONS	DATE
NONE	SWL	-			7/25/02

HEBRON, OHIO RECYCLE CENTER	DRAWING NUMBER 90-64200-306	REV. NO. 1

11 COOLING WATER SUPPLY	15 STEAM CONDENSATE RETURN	21 NITROGEN	27 VENT TO ATMOSPHERE	35 TREATED BFW	38 PLANT AIR
12 COOLING WATER RETURN	16 INSTRUMENT AIR	22 BLOWDOWN/FLARE	31 WATER SEWER	36 SEAL OIL SUPPLY	
13 STEAM SUPPLY	19 NATURAL GAS	24 PLANT WATER	32 DISCHARGE TO GRADE	37 SEAL OIL RETURN	

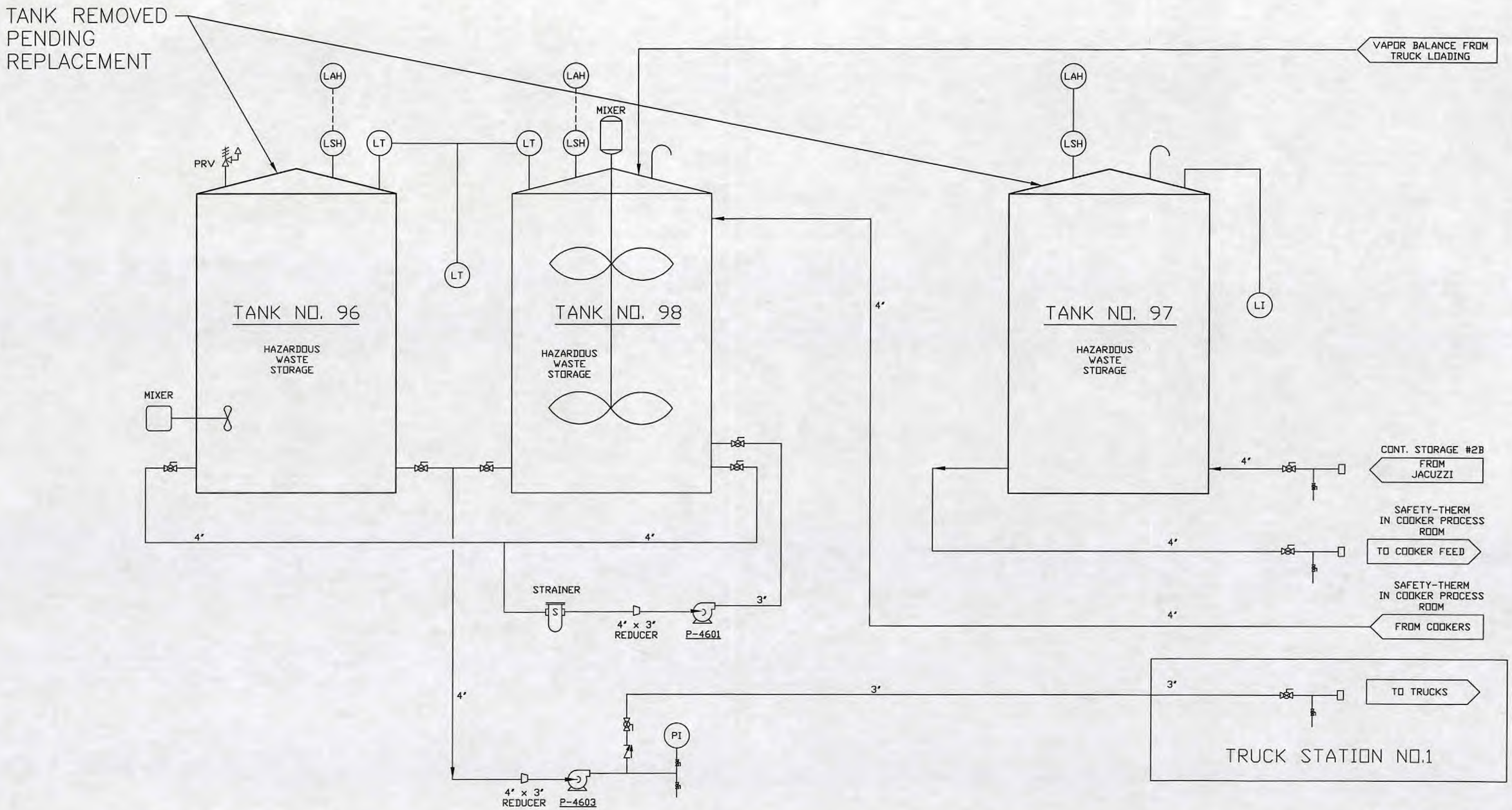

LEGEND

LAH - LEVEL ALARM HIGH
LSH - LEVEL SWITCH HIGH
PRV - PRESSURE RELIEF VALVE
LT - LEVEL TRANSMITTER
LI - LEVEL INDICATOR
PI - PRESSURE INDICATOR

P-4603
Waste Fuel Loading Pump

Chesterton 1 ½ x 3 x 13	
100 GPM	30 HP
1750 RPM	100' Head

P-4601
Drum Filler Pump

Goulds HS 2 x 2 x 8	
200 GPM	7.5 HP
1740 RPM	58' Head

THIS DRAWING IS THE EXCLUSIVE PROPERTY OF CLEAN HARBORS AND IS PROPRIETARY AND CONFIDENTIAL INFORMATION. THIS DRAWING AND THE INFORMATION CONTAINED THEREIN MUST NOT BE DUPLICATED, USED, DIVULGED, REPRODUCED, COPIED, DISCLOSED OR APPROPRIATED IN WHOLE OR IN PART FOR ANY PURPOSE OTHER THAN AS EXPRESSLY AUTHORIZED BY CLEAN HARBORS. THIS DRAWING MUST BE RETURNED PROMPTLY UPON REQUEST.

DF=Exhibit 50 Rev. 4

NO.	DESCRIPTION	BY	CK	APPR	DATE
4	RCRA PERMIT RENEWAL UPDATES	KMC			04/09/15
3	RCRA PERMIT RENEWAL UPDATE	KMC			12/12/14
2	ISSUED FOR PERMIT RENEWAL	SWL			07/01/02
1	ISSUED FOR PART B PERMIT NOD	RDK			03/05/92
0	ISSUED FOR PART B PERMIT	M.O'C			10/3/90

REVISIONS

EXHIBIT NO. 50

P & ID
TANKFARM NO. 6
TRUCK STATION NO. 1

CleanHarbors
581 MILLIKEN DRIVE, HEBRON, OHIO 43025 PHONE (740) 929-3532

SCALE	DRAWN	CHECKED	PROJ. ENG. APPR.	OPERATION APPR.	DATE
NONE	M.O'C				10/3/90

HEBRON, OHIO
RECYCLE CENTER

DRAWING NO. 90-64200-135 REV 4

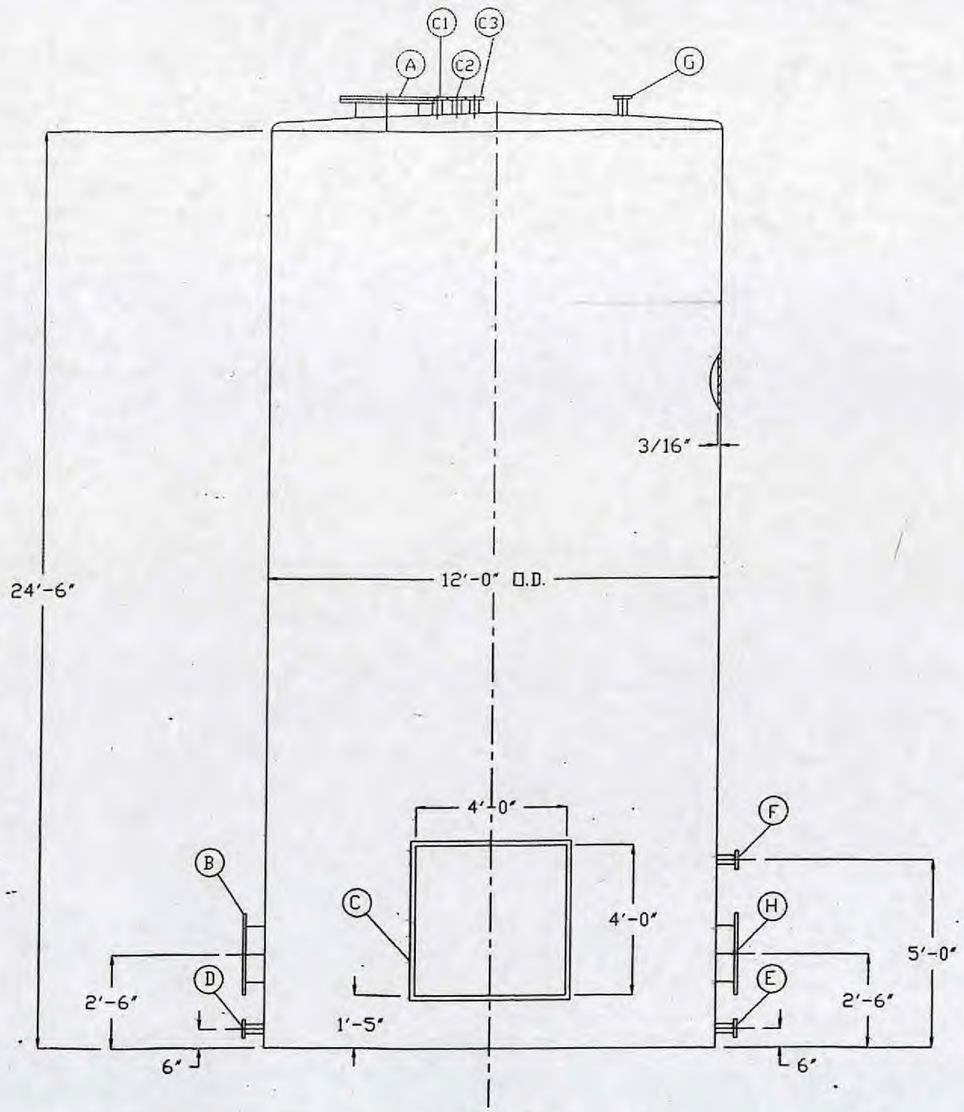

ELEVATION

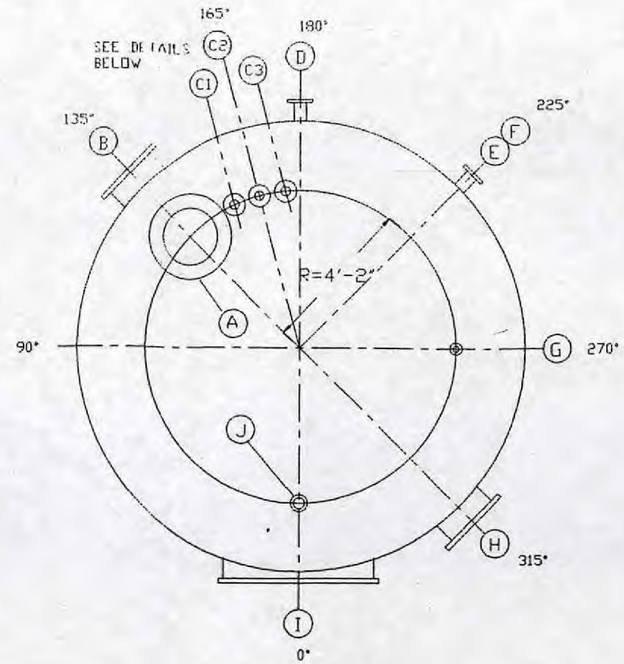

TOP VIEW

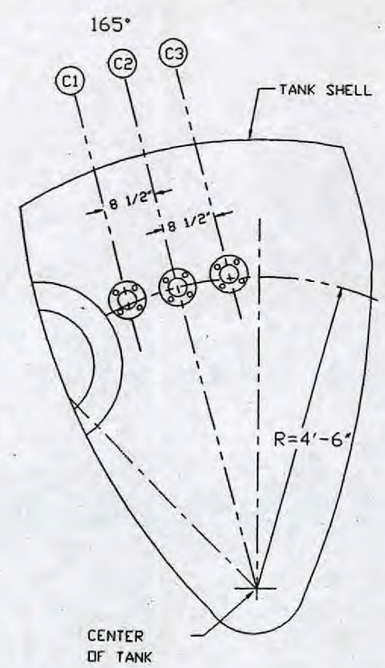

DETAILS C1, C2 & C3

SCALE: 1"=1'-0"

FITTING SCHEDULE			
MARK	SIZE/RATING	DESCRIPTION	REMARKS/REFERENCE
A	STD. 18" DIAM.	18"MANHOLE W/BLIND FLANGE	
B	STD. 18" DIAM.	18"MANHOLE W/BLIND FLANGE	
C1	2"-150#	2" FLANGED CONNECTION	TAPE GAUGE CONNECTION
C2	2"-150#	2" FLANGED CONNECTION	SPRING TENSIONED FLOAT GUIDE FITTING
C3	2"-150#	2" FLANGED CONNECTION	
D	2"-150#	2" FLANGED CONNECTION	DRAIN
E	4"-150#	4" FLANGED CONNECTION	PROCESS CONNECTION
F	4"-150#	4" FLANGED CONNECTION	PROCESS CONNECTION
G	2"-150#	2" FLANGED CONNECTION	DREXEL SWITCH
H	STD. 18" DIAM.	18"MANHOLE W/BLIND FLANGE	
I	48"x 48"		CLEANOUT
J	3"-150#	3" FLANGED CONNECTION	VENT CONNECTION

EXHIBIT NO. 51

NO.	DESCRIPTION	BY	CK	APPR	DATE
0	FOR PART "B" PERMIT PER NOD	RDK			05-17-91

REVISIONS

20000 gal. C.S. TANK
NO. 97

Clean Harbors
RECYCLING SERVICES of OHIO, LLC
581 Milliken Drive
Hebron, Ohio 43025

HEBRON, OHIO
RECYCLE CENTER

DRAWING NO. 91-64200-163

REV 0

DATE 05/17/91

THIS DRAWING CONTAINS INFORMATION PROPRIETARY TO SAFETY-KLEEN ANY REPRODUCTIONS, DISCLOSURE OR USE OF THIS DRAWING IS EXPRESSLY PROHIBITED EXCEPT BY SAFETY-KLEEN OR AS SAFETY-KLEEN MAY AGREE IN WRITTING.

LEGEND

LAH - LEVEL ALARM HIGH
LS - LEVEL SWITCH
LI - VAREC TAPE RANGE
PI - PRESSURE INDICATOR

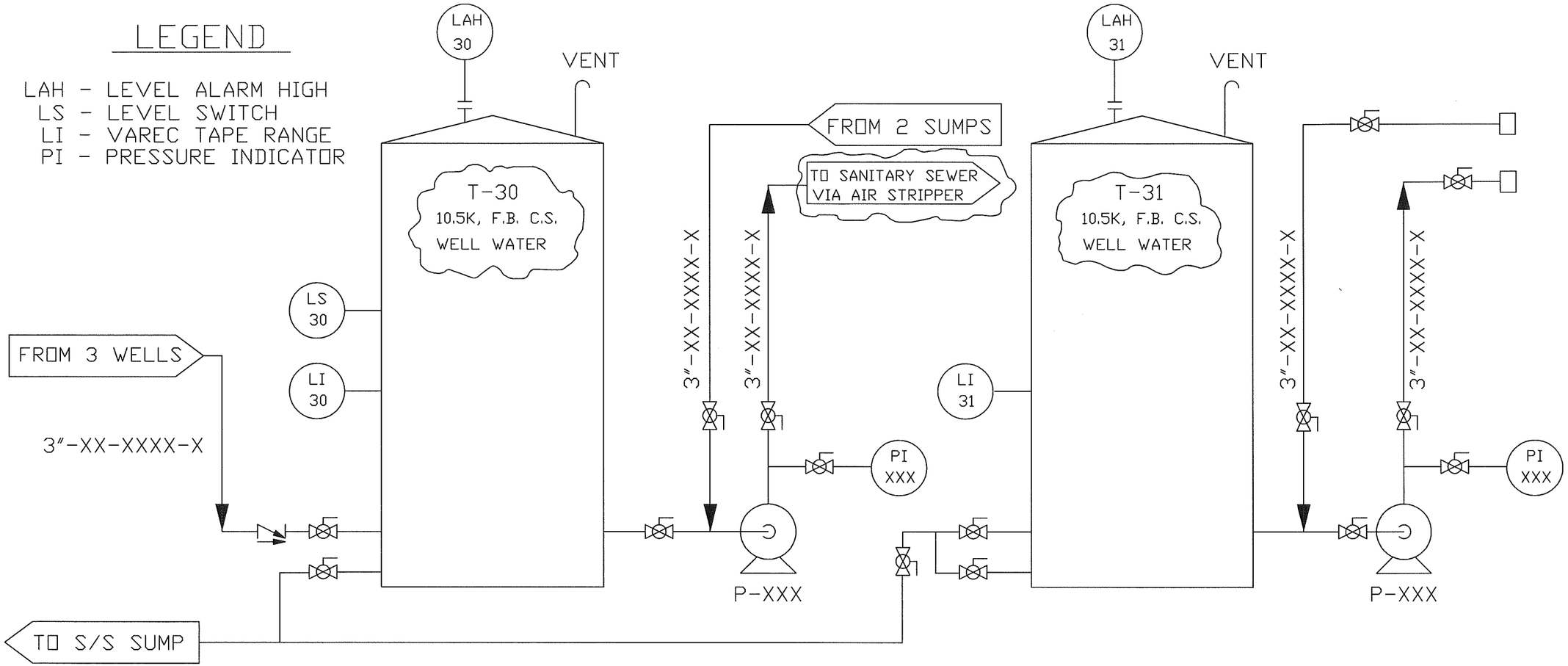

NOTE:

ALL HIGH LEVEL ALARM SIGNALS ARE INTERLOCKED WITH ALARM PANELS, OPERATOR TERMINALS AND, WHEN APPLICABLE, TO HIGH VOLUME PUMPS.

EXHIBIT 54

DF=Exhibit 54 Rev. 4

NO.	DESCRIPTION	BY	CK	APPR	DATE
4	RCRA PERMIT RENEWAL UPDATE	KMC			12/12/14
3	REVISED T-31 TO T-63	SWL			07/01/02
2	REVISED T-30 & T-31 TO 10.5K AND CLARIFIED AIR STRIPPER FLOW ARROW	MCO			01/22/97
1	ISSUED FOR 1994 NOD	RDK			10/19/94
0	ISSUED FOR PART "B" PERMIT NOD	RDK			03/04/92

REVISIONS

TANK FARM NO. 1
WASTE WATER
PROCESS FLOW DIAGRAM

CleanHarbors®
581 MILLIKEN DRIVE, HEBRON, OHIO 43025 PHONE (740) 929-3532

SCALE	DRAWN	CHECKED	PROJ. ENG. APPR	OPERATION APPR	DATE
NONE	RDK				3/4/92

HEBRON, OHIO
RECYCLE CENTER

DRAWING NO. 91-64200-163 REV 4

THIS DRAWING CONTAINS INFORMATION PROPRIETARY TO CLEAN HARBORS. ANY REPRODUCTIONS, DISCLOSURE OR USE OF THIS DRAWING IS EXPRESSLY PROHIBITED EXCEPT BY CLEAN HARBORS OR AS CLEAN HARBORS MAY AGREE IN WRITTING.

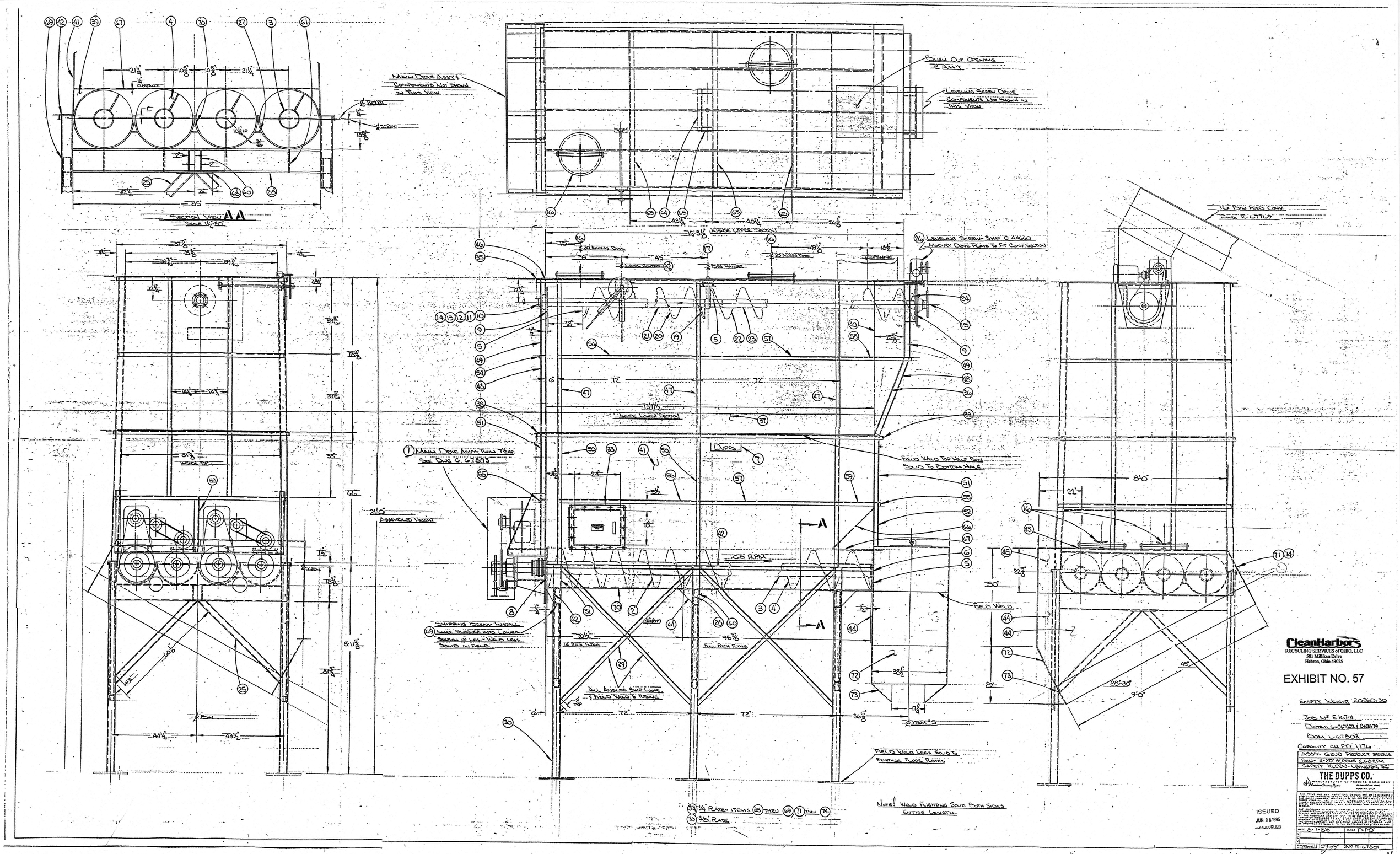
SECTION VIEW AA
SCALE 1½" = 1'0"
MAIN DRIVE ASSY'S COMPONENTS NOT SHOWN IN THIS VIEW
BLOW OUT OPENING @ ASSY'Y
LEVELING SCREW DRIVE COMPONENTS NOT SHOWN IN THIS VIEW
INSIDE UPPER SECTION
INSIDE LOWER SECTION
LEVELING SCREW- 3HP @ 44660
MODIFY DRIVE PLATE TO FIT CONV SECTION
16" BIN FEED CONV.
DWG K-67769
MAIN DRIVE ASSY- TWIN 7½HP.
SEE DWG. C 67593
ASSEMBLED HEIGHT
INSPECTOR
DUPPS
FIELD WELD TOP HALF BIN SOLID TO BOTTOM HALF
.68 RPM
SHIPPING PROCEDURE: INSTALL INNER SLEEVES INTO LOWER SECTION OF LEG. WELD LEGS SOLID IN FIELD.
16" RICH FLING
FULL RICH FLING
ALL ANGLES SHIP LOOSE & FIELD WELD & TRIMMING
FIELD WELD
FIELD WELD LEGS SOLID TO EXISTING FLOOR PLATES
Note! WELD FLIGHTING SOLID BOTH SIDES ENTIRE LENGTH.
¼" PLATE- ITEMS 35 THRU 69, 71 THRU 74
⅜" PLATE
CleanHarbors
RECYCLING SERVICES of OHIO, LLC
581 Milliken Drive
Hebron, Ohio 43025
EXHIBIT NO. 57
EMPTY WEIGHT 20260.30
JOB Nº E 167-4
DETAILS- C67602 & C67679
BOM L-67803
CAPACITY CU FT- 1,176
ASSY- SOLID PRODUCT STORAGE
DRIVE- 4-20" SCREWS 6.68 RPM
SAFETY WEBS- LEXINGTON SC
THE DUPPS CO.
MANUFACTURERS OF FEEDERS MACHINERY
CINCINNATI, OHIO
ISSUED
JUN 28 1995
DATE 6-7-95
SCALE 1"=1'0"
NO R-67801